General Specifications

μR20000
Recorder

GS 04P02B01-01E

The μR20000 is a compact recorder with a recording width of 180mm. The model family consists of 1, 2, 3, 4 pen and a 6,12,18, 24 dot models. Pen model realizes continuous recording for each channel, whereas the dot model realizes a high speed of 6 dot / 10 sec, 12 dot / 15 sec, 18 dot / 20 sec, 24 dot / 30 sec. The input is universal input. High reliability is realized by contact-free technology, such as high withstand voltage semiconductor relays, and pen servo unit using an ultra-small stepping motor. The versatile display such as multi-channel digital display, bar graph display, flag display, DI/DO status display, and date/time display are provided with 181 × 16 VFD dot display.

On models with the SD memory card (/EM1) option, measured data can be saved to an SD memory card while recording on chart paper. Further, on dot models, saved data can be replayed on chart paper.

The μR20000 can be used as a monitoring device and as a quality control instrument in many applications (such as process temperature monitoring, pollution, construction, furnaces, field of medical diagnosis, field of refrigerating, etc.).

The measuring accuracies noted in the general specifications have a margin of error that takes into account the product's components and the equipment used for adjustment and testing. However, the actual values calculated from the accuracy testing data upon shipment of the instrument from the factory are as follows.

Input		Measuring Range*1 (typical value)
DCV	20 mV	0.06 % of rdg + 1 digit
	60 mV	0.03 % of rdg + 1 digit
	6 V	0.03 % of rdg + 1 digit
TC*2	R	300 to 1760 °C: 0.06 % of rdg + 1.1 °C 0 to 300 °C: ± 1.5 °C
	K	0 to 1370 °C: 0.06 % of rdg + 0.5 °C -200 to 0 °C: 0.1 % of rdg + 0.5 °C
	J	0 to 1100 °C: 0.05 % of rdg + 0.4 °C -200 to 0 °C: 0.15 % of rdg + 0.4 °C
	T	0 to 400 °C: 0.05 % of rdg + 0.4 °C -100 to 0 °C: 0.15 % of rdg + 0.4 °C -200 to -100 °C: 0.15 % of rdg + 0.5 °C
	N	0 to 1300 °C: 0.05 % of rdg + 0.5 °C -200 to 0 °C: 0.3 % of rdg + 0.5 °C
RTD	Pt100	0.04 % of rdg + 0.2 °C

*1: General operating conditions: 23±2 ºC, 55±10% RH, supply voltage 90–132, 180–264 VAC, supply frequency within 50/60 Hz ±1%, warm-up of 30 minutes or more, no vibrations or other hindrances to performance.

*2: These values do not include the reference junction compensation accuracy.

rdg: reading value.

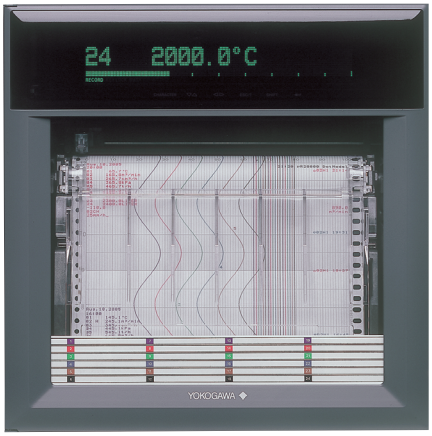

μR20000
(24 dot model)

■ STANDARD SPECIFICATIONS

General Specifications

Construction

Mounting:
Flush Panel Mounting (vertical).
Mounting may be inclined up to 30˚, rear below front (with horizontal base).
Allowable panel thickness: 2 to 26mm
Material:
Case: Steel, front door: aluminium die casting.
Case color:
Case and door-frame: Charcoal gray light (Mansell 10B 3.6 / 0.3 or equivalent)
Door: Splash and dust-proof (based on DIN 40050-IP54).
Dimensions:
288 × 288 × 220mm (see dimensional drawings)
Weight (approx.):

1 pen	7.8kg	6 dot	8.4kg
2 pen	7.8kg	12 dot	8.6kg
3 pen	7.9kg	18 dot	8.8kg
4 pen	7.9kg	24 dot	9.0kg

Model

1, 2, 3, and 4 pen, 6,12,18, 24 dot-model.

Input

Inputs: DCV: Direct Current Voltage input 20mV to 50V, 1-5V range.
TC: Thermo couple.
RTD: Resistance Temperature Detector.
DI: Digital Input (contact or DC Voltage, TTL level).
DCA: Direct Current Input (using external shunt resistor (10Ω, 100Ω, 250Ω))

YOKOGAWA
Yokogawa Electric Corporation
2-9-32, Nakacho, Musashino-shi, Tokyo, 180-8750 Japan
Tel.: 81-422-52-7179 Fax.: 81-422-52-6619

GS 04P02B01-01E
©Copyright Aug. 2005(YK)
19th Edition Feb. 9 2024(YK)

Measuring range: selectable per channel

Input Type	Range	Measuring Range
DC V	20 mV	–20.00 to 20.00mV
	60 mV	–60.00 to 60.00mV
	200 mV	–200.0 to 200.0mV
	2 V	–2.000 to 2.000V
	6 V	–6.000 to 6.000V
	20 V	–20.00 to 20.00V
	50V	–50.00 to 50.00V
	1-5V*1	1.000 to 5.000V

*1: Only linear scaling can be used (burnout is available)

Input	Range	Measuring Range ˚C	Measuring Range ˚F
TC	R*2	0.0 to 1760.0˚C	32 to 3200˚F
	S*2	0.0 to 1760.0˚C	32 to 3200˚F
	B*2	0.0 to 1820.0˚C	32 to 3308˚F
	K*2	–200.0 to 1370.0˚C	–328 to 2498˚F
	E*2	–200.0 to 800.0˚C	–328.0 to 1472.0˚F
	J*2	–200.0 to 1100.0˚C	–328.0 to 2012.0˚F
	T*2	–200.0 to 400.0˚C	–328.0 to 752.0˚F
	N*2	0.0 to 1300.0˚C	32 to 2372˚F
	W*3	0.0 to 2315.0˚C	32 to 4199˚F
	L*4	–200.0 to 900.0˚C	–328.0 to 1652.0˚F
	U*4	–200.0 to 400.0˚C	–328.9 to 752.0˚F
	WRe*5	0.0 to 2400.0˚C	32 to 4352˚F
RTD*6	Pt100*6	–200.0 to 600.0˚C	–328.0 to 1112.0˚F
	JPt100*6	–200.0 to 550.0˚C	–328.0 to 1022.0˚F
DI	DCV input	OFF: 2.4V less ON: 2.4V or greater	
	Contact input	Contact input ON/OFF	

*2: R, S, B, K, E, J, T, N: IEC 60584-1, DIN EN 60584-1, JIS C1602
*3: W: W-5% Re/W-26% Re(Hoskins Mfg. Co.), ASTM E988-96
(Type C equivalent of OMEGA Engineering Inc.)
*4: L: Fe-CuNi, DIN43710, U: Cu-CuNi, DIN43710
*5: WRe: W-3% Re/W-25% Re(Hoskins Mfg. Co.), ASTM E988-96
(Type D equivalent of OMEGA Engineering Inc.)
*6: Pt100: JIS C 1604, IEC 60751, DIN EN 60751
JPt100: JIS C1604, JIS C1606
Measuring current: i=1mA

Measurement Interval:
Pen model: 125ms / channel
Dot printing model: 1s / 6 dot, 2.5s / 12-24 dot
2.5s / 6 dot, 5s / 12 dot, 10s / 18-24 dot (AD integration time is 100ms)

A/D Integration Time:
AUTO / FIX selectable
AUTO: 20ms (50Hz) or 16.7ms (60Hz), automatically selected depending on the power supply frequency.
FIX: 20ms (50Hz), 16.7ms (60Hz) or 100ms (50 / 60Hz)*1 can be selected.
*1 100ms integration time: only for dot printing model (not available for 1s / 6 dot measure-ment interval)

TC Burnout:
ON / OFF selectable (per channel).
Burnout upscale / downscale selectable (per channel)
Normal: less than 2kΩ, burnout: more than 10MΩ.
Measuring current: approx. 10μA.

1-5V Burnout:
Burnout: less than 0.2V

Filter:
Pen model:
Signal damping: ON / OFF selectable per channel
Time constant : 2, 5, 10sec
Dot printing model:
Moving average: ON / OFF selectable per channel
Moving average cycle: 2 to 16

Computation:
Differential computation:
Between any two channels, however reference channel number must be smaller than measuring channel number.
Available for DCV, TC, and RTD range.
Both channels must have same range.
Linear scaling:
Available for DCV, TC , RTD and DI range.
Scaling range: –20000 to 30000
Data display & printout range:–19999 to 30000
Decimal point: User selectable
Unit: User settable, up to 6 characters (alphanumerical & special characters).
Square root:
Available for DCV range.
Scaling range: –20000 to 30000
Data display & printout range:–19999 to 30000
Decimal point: User selectable
Unit: User settable, up to 6 characters (alphanumerical & special characters).
Low level cut off: 0.0 to 5.0% of recording span
Bias addition: –10.0 to 10.0% of recording span

Recording and Printing

Recording Method:
Pen model: Disposable felt pens, Plotter pen
Dot printing model: 6 color wire dot.

Pen Offset Compensation:
ON / OFF selectable (Pen model only)

Effective Recording Width: 180mm

Chart:
Plain-paper Z-fold chart (20m)

Step Response Time (pen):
Approx. 1.5s /IEC 61143 method

Recording Period:
Pen model:
Continuous for each channel.
Dot printing model*:
Max. 6 channel / 10 sec(the shortest recording period)
7 to 12 channels / 15 sec(the shortest recording period)
13 to 18 channels / 20 sec(the shortest recording period)
19 to 24 channels / 30 sec(the shortest recording period)
25 to 48 channels / 60 sec(the shortest recording period)
* The model with /M1 option includes analog recording of mathematical channel.
AUTO / FIX selectable
AUTO: Analog recording interval is depending on the chart speed
FIX: Analog recording interval is set to the shortest period

All Rights Reserved. Copyright © 2009, Yokogawa Electric Corporation

Chart Speed:
Pen model: 5 to 12000mm/h (82 increments)
Dot printing model: 1 to 1500mm/h (1mm step)
Chart Speed Change:
Speed 1, speed 2 change by remote control signals (option)
Chart Speed Accuracy:
Within ± 0.1% (for recordings longer than 1000mm, related to the grid of the chart paper)

Relation between Chart Speed and Printout:

(Pen-model)

Chart Speed	•Periodic Printout	•Alarm Printout •Message Printout •Chart Speed Change Time Printout
5 to 9mm/h	NA	Available
10 to 1500mm/h	Available	Available
1600 to 12000mm/h	NA	NA

(6,12 dot model)

Chart Speed	•Channel No. or Tag No.	•Periodic Printout	•Alarm Printout •Message Printout •Chart Speed Change Time Printout
1 to 9mm/h	Available	NA	Available
10 to 100mm/h	Available	Available	Available
101 to 1500mm/h	NA	NA	NA

(18,24 dot model)

Chart Speed	•Channel No. or Tag No.	•Periodic Printout	•Alarm Printout •Message Printout •Chart Speed Change Time Printout
1 to 9mm/h	Available	NA	Available
10 to 50mm/h	Available	Available	Available
51 to 1500mm/h	NA	NA	NA

Relation between chart speed and printing intervals of periodic printouts (For AUTO interval setting):

(Pen-model)

Chart Speed	Printing Interval of Periodic Printout
5 to 9mm/h	NA
10 to 18mm/h	Every 8 hours
20 to 36mm/h	Every 4 hours
40 to 72mm/h	Every 2 hours
75 to 135mm/h	Every hour
150 to 180mm/h	Every 30 minutes
200 to 320mm/h	Every 20 minutes
360 to 1500mm/h	Every 10 minutes
more than 1600mm/h	NA

(Dot model)

Chart Speed	Printing Interval of Periodic Printout			
	6 dot	12 dot	18 dot	24 dot
1 to 9 mm/h	NA	NA	NA	NA
10 to 19 mm/h	8 hours	12 hours	12 hours	24 hours
20 to 39 mm/h	4 hours	8 hours	8 hours	12 hours
40 to 50 mm/h	2 hours	4 hours	4 hours	8 hours
51 to 79 mm/h	2 hours	4 hours	NA	NA
80 to 100 mm/h	1 hour	2 hours	NA	NA
101 to 1500 mm/h	NA	NA	NA	NA

Recording Colors:
Pen model:
1pen=red, 2pen=green, 3pen=blue, 4pen=violet, plotter pen=purple
Dot model:
ch.1,7,13,19=purple, ch.2,8,14,20=red, ch.3,9,15,21=green, ch.4,10,16,22=blue, ch.5,11,17,23=brown, ch.6,12,18,24=black (color can be assigned to any channels)
Recording Format:
1. Analog recording:
Analog recording ON/OFF selectable for each channel of dot model
Zone recording:
Span: 5mm or more (1mm step)
Partial expanded recording:
Boundary position: 1 to 99%
Boundary value: Within recording span
2. Digital printout:
Channel (dot model only):
Channel number or TAG will be printed during analog recording. Approx. every 25mm this print will occur.
ON / OFF selectable (common for all channels)
Alarm:
At the right side of the chart, CH. No. or TAG, Type of alarm, (date*4/time)*2 of alarm ON / OFF will be printed. Time of alarm ON / OFF, time of alarm ON, OFF selectable (common for all channels).
Periodic printout contents:
Date (mm/dd/yy)*4, time(hh:mm), measurement data of each channel , scale printout, recording color, chart speed
- Measurement data of each channel:
a. ON/OFF selectable
b. Channel No. or tag, alarm status (for instantaneous mode),measuring value (according to instantaneous mode or report mode), measuring unit (up to 6 characters)
- Scale printout:
a. ON/OFF selectable (common for all channels)
b. 0 and 100% scale value (when using partial expanded recording, boundary value is recorded)
c. Printout available for recording span of 40 mm or more
- Recording color:
Only for pen model (OFF selectable)
- Periodic print interval:
a. Using internal timer
b. Standard time 00:00 to 23:00(on the hour)
c. Print interval setting (AUTO/MAN)*5
AUTO: Automatically set as chart speed
MAN: 10, 12, 15, 20, 30 minute, 1, 2, 3, 4, 6, 8, 12, 24 hour
- Periodic printout mode:
Selectable from Instantaneous value mode / report mode/OFF mode
a. Instantaneous value mode:
Measuring value for each channel

All Rights Reserved. Copyright © 2009, Yokogawa Electric Corporation

b. Report mode: Selectable from MIN, MAX, AVE, MIX(MIN/MAX/AVE), SUM, INST
Report interval: Same as periodic printout interval
c. OFF mode: Periodic printout is not executed.

Message printout:
With panel key or remote control option, up to 5 messages can be printed.
Contents: (Date*4/time)*1 and message (up to 16 characters).

Record start time:
(Date*4/time)*2 will be printed when recording starts, ON / OFF selectable.

Chart speed printout:
(Date*4/time)*2 when chart speed is changed will be printed, ON / OFF selectable.

List printout*3:
Listings of range and alarm setting, etc. will be printed.

Manual printout*3:
With panel key or remote control option, measuring value will be printed.

SET UP List printout*3:
Listings of settings in SET UP Mode will be printed.

*1 Selectable from hh:mm, hh:mm:ss, mm/dd hh:mm, mm/dd hh:mm:ss, mm/dd/yy hh:mm:ss, OFF.
*2 Selectable from hh:mm, hh:mm:ss, mm/dd hh:mm, mm/dd hh:mm:ss, mm/dd/yy hh:mm:ss
*3 During printout trend recording will be interrupted.
*4 Selectable from mm.dd.yy, yy/mm/dd, mm/dd/yy, dd/mm/yy or dd.mm.yy
*5 According to print settings all the items are not printed.

Display

Display Method:
VFD 181 × 16 dot matrix

15 display screens can be selected from the any of followings (default display is 6 screens)

- 1 channel digital display*1,*4: AUTO*2/MAN*3
- 2 channel digital display*1,*4: AUTO*2/MAN*3
- 3 channel digital display*4,*5: AUTO*2/MAN*3
- 4 channel digital display*4: Channel No., alarm type, measuring value, with measuring unit (3digits)*6 are displayed
- 6 channel digital display*4: Channel No., alarm type, measuring value are displayed (only for dot model)
- 12 channel digital display*4: measuring value are displayed (only for 12, 18, 24 dot model)
- 1 channel digital display*4 + 1 channel bar graph display: AUTO*2/MAN*3
- 1 channel digital display*4 + 4 channel bar graph display (only for pen model): AUTO*2/MAN*3
- 2 channel digital*4 + 2 channel bar graph display: AUTO*2/MAN*3
- 4 channel bar graph display (only for 4 pen model)
- Flag display
- DI/DO display (Available for model with /R1 or /A1, /A2, /A3, /A4, /A5 option)
- Alarm status*1
- Date/time display (mm/dd/yy hh:mm)+Chart speed display*1
- Status display*1
- System display
- Display Off (light out)*1
- Split display: Upper/lower position display
- Tag 1 channel digital display*1,*4: AUTO*2/MAN*3
- Tag 2 channel digital display*4: AUTO*2/MAN*3
- Tag 1 channel digital display*4 + 1 channel bar graph display: AUTO*2/MAN*3
- Tag 1 channel digital display + 4 channel bar graph display*4 (4 pen model only)
- Batch name....For the model with /BT1 option
- SD card status display....When the /EM1 option is installed

Status display:
Recording in progress (RECORD)
Shared alarm display (ALARM)
Alarm occurrence No. display (1 to 24)
Computation in progress(MATH).....For the model with /M1 option
Key lock display (KEY LOCK)

*1 The displays can be specified for split display.
*2 AUTO: Channel No., alarm type, measuring value, and measuring unit (6 digits) are displayed in order of channel No.
For 2 channel digital display + 2 channel bar graph display, the unit display is 3 digits.
No unit display for 3 channel digital display
*3 MAN: The same contents of AUTO for the specified channel are displayed.
*4 Display updated interval can be selected from AUTO / MAN.
AUTO: 1s / 2s / 3s / 4s / 5s
MAN: 2s (pen model), same as measurement interval (dot model)
*5 The display can be specified only for split display.
*6 For computation channel display, the unit display is 2 digits

Power Supply

Rated Power Voltage:
100 to 240VAC, automatically selected depending on the power supply voltage

Usable power voltage ranges:
90 to 264VAC

Rated Power Frequency:
50 / 60 Hz, automatically selected

Power Consumption:

(approx.)

	100VAC Power Source	240VAC Power Source	Maximum
1-4 pen	17VA*	25VA*	55VA
6-24 dot	17VA*	23VA*	55VA

* : In Balance

Alarm

Number of alarm levels:
Up to four levels for each channel

Alarm types:
High and low, limits, differential high and low limits, high and low rate-of-change limits and delay high and low

Alarm delay time: 1 to 3600s

Interval time of rate-of-change alarms:
The measurement interval times 1 to 15

Display:
Alarm value is indicated as a point on the bar graph.

All Rights Reserved. Copyright © 2009, Yokogawa Electric Corporation

In occurring an alarm:
- On bar graph display, a point indicator is flashing.
- On digital display, an alarm type indicator is shown.
- A channel number of occurring alarm is displayed.
- Shared alarm display

Hysteresis:
0.0 to 1.0% (0.1% step) of recording span (only High, Low alarm, common for all channels and all levels).

Alarm indication when ALARM ACK-key is pressed:
Non-hold-type:
Alarm display is not affected when the ALARM ACK-key is pressed.
Hold-type:
When alarm occurs, alarm indicator will start flashing. After ALARM ACK-key is pressed, indicator will show status of the alarm.

Hold-type:

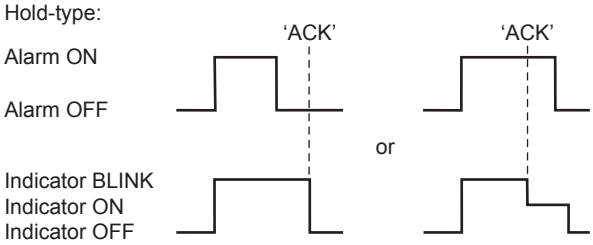

Non-hold type:
No action will occur when ACK-key is pressed.
ALM indicator depends on alarm status.

F01.ai

Other Specifications

Clock:
With calendar function

Summer time:
Summer time can be set.

Clock Accuracy:
100 ppm, however not including error due to turning ON / OFF power

Panel Key Lock:
Protection by password
(Any of RCD, MENU, FEED key and functions (Alarm ACK, Math, Printout, Message, Buffer clear, Digital PRT, Pen exchange (only for pen model), Ribbon exchange (only for dot model), ribbon cassette replacement (only for dot model), data save, replaying on chart paper (only for dot model), removing the SD memory card) can be locked).

Internal illumination:
White LED

Memory backup:
Lithium battery to protect setting parameters. Life is approx. ten years (at room temperature, and for standard model) and is installed inside the recorder.

Insulation Resistance:
Each terminal to ground terminal: More than 20MΩ (measured at 500VDC).

Dielectric Strength:
Power supply to ground terminal:
1500V AC (50 / 60Hz), 1 min
Contact output terminal to ground:
1500V AC (50 / 60Hz), 1 min
Measuring input terminal to ground:
1000V AC (50 / 60Hz), 1 min
Between measuring input terminals:
1000V AC (50 / 60Hz), 1 min
(except for RTD, since b-terminal is common).
Between remote control terminal to ground:
500V DC, 1min.

Mechanical noise:
Machine Noise Information Ordinance 3. GSGV, Jan. 18, 1991:
The maximum sound pressure level is equal or less than 60dB (A) according to ISO7779.

Safety and EMC standards

CSA
CAN/CSA-C22.2 No. 61010-1,
CSA-C22.2 No. 61010-2-030,
Overvoltage Category II or I*1, Pollution Degree 2*2,
Measurement Category II*3

UL
UL 61010-1, UL Std. No. 61010-2-030 (CSA NRTL/C)
Overvoltage Category II or I*1, Pollution Degree 2*2,
Measurement Category II*3

CE, UKCA
EMC directive:
EN 61326-1 Class A, Table 2 (For use in industrial locations) compliant
EN 61000-3-2 compliant
EN IEC 61000-3-2 compliant
EN 61000-3-3 compliant
EN 55011 Class A Group 1 compliant
Low voltage directive:
EN 61010-1, EN IEC 61010-2-030 compliant,
Overvoltage Category II or I*1, Pollution Degree 2*2,
Measurement Category II*3
EU RoHS directive:
EN IEC 63000 compliant

WEEE Directive: Compliant

EMC Regulatory Arrangement in Australia and New Zealand (RCM): EN 55011 Class A, Group 1 compliant

KC marking: KS C9811, KS C9610-6-2 compliant

*1 Overvoltage Category
Describes a number which defines a transient overvoltage condition. It implies the regulation for impulse withstand voltage. Applies to electrical equipment which is supplied from fixed installations like distribution boards.
II: Applied to standard power supply (100 - 240 VAC)
I: Applied to /P1 option (24 VDC/AC)

*2 Pollution Degree
Describes the degree to which a solid, liquid, or gas which deteriorates dielectric strength or surface resistivity is adhering.
"2" applies to normal indoor atmosphere.
Normally, only non-conductive pollution occurs.

*3 Measurement Category II (CAT II)
Applies to measuring circuits connected to low voltage installation, and electrical instruments supplied with power from fixed equipment such as electric switchboards.

All Rights Reserved. Copyright © 2009, Yokogawa Electric Corporation

Normal Operating Conditions

Power voltage: 90 to 132, 180 to 264VAC
Power frequency: 50Hz ± 2%, 60Hz ± 2%
Ambient temperature: 0 to 50˚C
Ambient humidity: 20 to 80% RH (at 5 to 40˚C)
30 to 50% RH (at 0 to 5, 40 to 50˚C)
Vibration: 10 to 60Hz, 0.2m/s^2 or less
Shock: Not acceptable
Magnetic field: Less than 400A/m (DC and 50, 60Hz)
Noise:
Normal Mode (50 / 60Hz):
DCV Peak value including signal must be less than 1.2 times the measuring range.
TC Peak value including signal must be less than 1.2 times the measuring thermal electromotive force.
RTD less than 50mV.
Common Mode (50 / 60Hz):
Less than 30VAC rms or 60VDC for the whole range
Maximum noise voltage between channels (50 / 60Hz) :
250VAC rms or less for pen model and 6,12 dot model
200VAC rms or less for 18, 24 dot model
*When /N2 (3 leg RTD) option is specified,
200VAC rms or less for 6 dot,
100VAC rms or less for 12, 18, and 24 dot model

All Rights Reserved. Copyright © 2009, Yokogawa Electric Corporation

Operating Position:
Frontwards: 0˚ Backwards: Within 30˚ from horizontal
Warm-up Time:
Min. 30 minutes after power has been turned ON.
Altitude: 2000m or less

Standard Performance

Measuring and Recording Accuracy:
(Following specifications apply to operation of the recorder under standard operation conditions: temperature 23 ± 2˚C, humidity 55 ± 10%RH, power supply voltage 90 to 132V, 180 to 264V AC, power supply frequency 50/60Hz ± 1%, warm-up time at least 30 minutes, other ambient conditions like vibration should not adversely affect the recording operation).

Input	Range	Measuring (digital display)		Recording (analog)	
		Measurement Accuracy*	Max. Resolution	Recording Accuracy	Resolution
DC V	20mV	±(0.1% of rdg+2 digits)	10μV	±Measurement accuracy ±0.3% of recording span	Pen model dead band: 0.2% of recording span Dot printing model resolution: 0.1mm
	60mV		10μV		
	200mV		100μV		
	2V		1mV		
	6V		1mV		
	20V		10mV		
	50V	±(0.1% of rdg+3 digits)	10mV		
	1-5V	±(0.1% of rdg+2 digits)	1mV		
TC (excluding the accuracy of reference junction compensation)	R S B	±(0.15% of rdg+1˚C) but R, S : 0 to 100˚C, ±3.7˚C 100 to 300˚C, ±1.5˚C B : 400 to 600˚C, ±2˚C, and is not guaranteed below 400˚C	0.1˚C	±Measurement accuracy ±0.3% of recording span	Pen model dead band: 0.2% of recording span Dot printing model resolution: 0.1mm
	K	±(0.15% of rdg+0.7˚C) but –200 to –100˚C ±(0.15% of rdg+1˚C)			
	E J T	±(0.15% of rdg+0.5˚C) but J : –200 to –100˚C ±(0.15% of rdg+0.7˚C)			
	N	±(0.15% of rdg+0.7˚C)			
	W	±(0.15% of rdg+1˚C)			
	L U	±(0.15% of rdg+0.5˚C) but L : –200 to –100˚C ±(0.15% of rdg+0.7˚C)			
	WRe	±(0.2% of rdg+1.0˚C)			
RTD	Pt100 JPt100	±(0.15% of rdg+0.3˚C)	0.1˚C	±Measurement accuracy ±0.3% of recording span	Pen model dead band: 0.2% of recording span Dot printing model resolution: 0.1mm

NOTE: Recording span is 180 mm.

*including the measurement accuracy at linear scaling.

Accuracy in case of scaling:
Accuracy during scaling (digits) =
measuring accuracy (digits) × multiplier + 2 digits (rounded up)
Where the multiplier = scaling span digits / recording span digits

Example:
DCV 6V range
recording span : 1.000 to 5.000V
scaling span : 0.000 to 2.000
measuring accuracy = ±(0.3% × 5V + 2 digits)
±(0.015V (15 digits) + 2)
±(17 digits)
multiplier = 2000 digits (0.000 to 2.000 / 4000 digits (1.000 to 5.000V) = 0.5
Accuracy during scaling = 17 digits × 0.5 + 2 = 11 digits (rounded up)

Maximum Allowable Input Voltage:
± 10VDC (cont.) for 200mVDC ranges or less and TC, RTD, DI ranges
± 60VDC (cont.) for 2VDC or more

Reference Junction Compensation:
INT / EXT selectable (per channel)

Reference Junction Compensation Accuracy (when measuring 0 ˚C or up):
Type R, S, B, W, WRe: ± 1 ˚C
Type K, J, E, T, N, L, U: ± 0.5 ˚C

Input Resistance:
10MΩ or more (TC, 20mV, 60mV, 200mV range)
Approx. 1MΩ (2V range or more).

Input Source Resistance:
DCV, TC: 2kΩ or less
RTD: 10Ω or less / wire (The resistance of all three wires must be equal)

All Rights Reserved. Copyright © 2009, Yokogawa Electric Corporation

Input Bias Current:
10nA or less (except when burnout is specified).

Maximum Common Mode Noise Voltage:
250VAC rms (50 / 60Hz)

Maximum Differential Noise between Channels:
250VAC rms (50 / 60Hz) or less for pen model and 6,12 dot model

200VAC rms (50 / 60Hz) or less for 18, 24 dot model

*When /N2 (3 leg RTD) option is specified,

200VAC rms (50 / 60Hz) or less for 6 dot,

100VAC rms (50 / 60Hz) or less for 12, 18, and

24 dot model

Interference between Channels:
120dB (Input external resistance 500Ω, the deviation in the case that 60V is applied to another channel)

Common Mode Rejection Ratio:
120dB (50/60Hz ± 0.1%, 500Ω imbalance between '–' terminal and ground)

Normal Mode Rejection Ratio:
40dB (50 / 60Hz ± 0.1%)

Effect of Operating Conditions

Effect of Ambient Temperature:
Effect of ambient temperature variation of 10˚C.
Digital display: Within ± (0.1% of rdg+1 digit)
Recording: Within Digital display ± 0.2% of recording span (excluding RJC error)

Effect of Power Supply:
Effect of variation within 90 to 264VAC in rated power supply voltage:
(50 or 60Hz)
Digital display: Within ± 1 digit
Recording: Within ± 0.1% of recording span
Effect of rated power frequency variation of ± 2Hz (at 100VAC):
Digital display: Within ± (0.1% of rdg+1 digit)
Recording: Same as digital display

Effect of Magnetic Field:
Effect of AC (50 / 60Hz) or DC 400A/m field:
Digital display: Within ± (0.1% of rdg+10 digits)
Recording: Less than ± 0.5% of recording span

Effect of Input Source Resistance:
Effect of Input Source Resistance variation of +1kΩ :
DCV range:
200mV or lower range: Within ± 10 μV
2V or higher range: Within –0.1% of rdg
TC range:
Within ± 10 μV
RTD range:
- Effect of 10Ω per wire (resistances of three wires must be equal):
  Digital display: Within ± (0.1% of rdg+1 digit)
  Recording: Within Digital display ± 0.1% of recording span
- Effect of difference of three wires:
  Digital display: 0.1˚C per 40 mΩ (approx.) for Pt100 range.

Effect of Operating Position:
Digital display: Within ± (0.1% of rdg+1 digit) (within 30˚ backwards)
Recording: Within Digital display ± 0.1% of recording span (within 30˚ backwards)

Vibration:
Effect when sine-wave motion of frequency 10 to 60Hz and acceleration of 0.2m/s^2 is applied to the instrument in the direction of three axes for two hours:
Digital display: Within ± (0.1% of rdg+1 digit)
Recording: Within Digital display ± 0.1% of recording span

Transport and Storage Conditions

No malfunction will occur under these conditions, however when returning to normal operation conditions, calibration might be necessary.
Temperature: –25˚C to 60˚C
Humidity: 5 to 95% RH (no condensation)
Vibration: 10 to 60Hz, 4.9m/s^2
Shock: 392m/s^2 or less (while being packed)

■ OPTIONAL SPECIFICATIONS

/A1: Alarm Output Relay (2 contacts)
/A2: Alarm Output Relay (4 contacts)
/A3: Alarm Output Relay (6 contacts)
/A4: Alarm Output Relay (12 contacts)
/A5: Alarm Output Relay (24 contacts)

When alarm occurs, output relay on rear terminal will be activated.
- AND / OR selectable.
- Energized/ deenergized selectable (common for all relays).
- Hold type/ non-hold type selectable (common for all relays).
- Reflash relay:
  Alarms can be assigned to an output relay (I01-I03)
- Relay contact rating: DC 250V / 0.1A
  AC 250V / 3A
- Type of relay output: NO-C-NC

Note : Alarm ACK key:
Non-Hold type:
No effect when ALARM ACK-key is pressed (no effect on output relay).
Hold type:
When ALARM ACK-key is pressed, the output relay will be reset.

All Rights Reserved. Copyright © 2009, Yokogawa Electric Corporation

Non-hold-type:

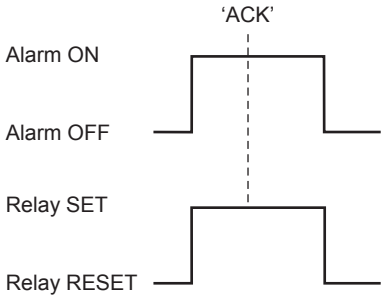

Hold-type:

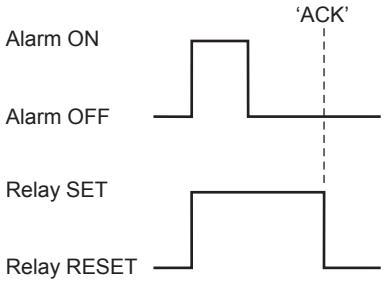

(ex. 1)

F02.ai

Hold-type:

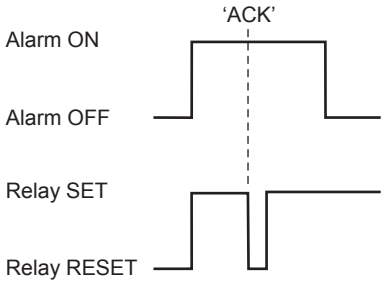

(ex. 2)

F03.ai

/C3: RS-422A / 485 Communication Interface

By using this communication function, setting and control of data can be done by a host-computer. Data can also be output to the host-computer.

- Synchronization method:
  start-stop asynchronous transmission
- Specifications:
  Conform to EIA RS-422A / 485 standard
- Protocols:
  YOKOGAWA private protocol, Modbus protocol
- Communication method:
  4-wire half-duplex multi-drop connection
  (1: N (N=1 to 32))
- Transfer rate:
  1200, 2400, 4800, 9600, 19200, 38400bps
- Data length: 7 or 8 bit
- Stop bit: 1 bit
- Parity: Odd, even or none
- Communication distance: Up to 1.2km
- Communication mode:
  ASCII (control / setting / measured data) or
  Binary (measured data)

Modbus: RTU SLAVE

/C7: Ethernet Interface

Electrical and mechanical specifications:
Conforms to IEEE 802.3
Transmission media: 10 Base-T
Protocol: TCP, IP, UDP, ICMP, ARP

/H2: Clamped Input Terminal

Using clamped input terminals as input terminal.

/H3: Non-glare Door Glass

Provides non-reflective glass in the front door.

/H5[ ]: Portable Type

Provides carrying handle and power code. (cable length: approx. 2m, 3 pin plug)

/M1: Mathematical Functions

- Computation channel recording
  Pen model: Measurement and computation channel can be assigned to 1-4pen.
  Dot model: ON/OFF selectable for each channel
  Zone recording
  Partial expanded recording
- Alarm for computation channel
  Number of levels: Up to four levels for every channel (High and low limits, delay High and low)
- Number of computation channel: 8 (pen model)
  24 (dot model)
- Computation expression: Up to 120 characters can be used
- Types:
  Four arithmetic operations, square root, absolute, common logarithm, exponential, power, relational operations (>, ≥, <, ≤, =, ≠), logic operations (AND, OR, NOT, XOR)
- Constant*: Up to 30 constants can be used
- Number of communication digital input*:
  Pen model: 8
  Dot model: 24
- Remote input*:Up to 5 remote inputs status(I/O) can be used in computation expression

* It cannot be used in statistical computation expression.

Statistical computation
The following computation can be executed for the specified internal timer

- Types of statistics: MAX, MIN, AVE, SUM, MAX-MIN (Totalization)
- Type of interval timer: 3 type
  Timer types: Interval of periodic printout, absolute time, relative time

/N1: Cu10, Cu25 RTD input

This option allows Cu10 and Cu25 RTD inputs to be added to the standard input types.

All Rights Reserved. Copyright © 2009, Yokogawa Electric Corporation

Cu10, Cu25 Measurement Range

	Input Type	Measurement Range
RTD	Cu10(GE) Cu10(L&N) Cu10(WEED) Cu10(BAILEY) Cu10 : α = 0.00392 at 20˚C Cu10 : α = 0.00393 at 20˚C Cu25*: α = 0.00425 at 0˚C	–200.0 to 300.0˚C (–328.0 to 572.0˚F)

* Measuring current i = 1mA

Measurement / Recording Accuracy

Input Type	Measurement Accuracy	Recording Accuracy
Cu10(GE) Cu10(L&N) Cu10(WEED) Cu10(BAILEY) Cu10 : α = 0.00392 at 20˚C Cu10 : α = 0.00393 at 20˚C	± (0.4% of rdg + 1.0˚C)	± Measurement accuracy ± 0.3% of recording span
Cu25 : α = 0.00425 at 0˚C	± (0.3% of rdg + 0.8˚C)	

/N2: 3 Leg Isolated RTD Input

A, B, b legs are isolated input type

/N3: Expansion Inputs

This option allows 14 types inputs such as Pt50, PR40-20, PLATINEL inputs to be supported besides the standard input types.

/N3 Measurement Range

Input		Measuring Range	
TC (Excluding RJC accuracy)	PR40-20	0.0 to 1900.0˚C	32 to 3452˚F
	PLATINEL	0.0 to 1400.0˚C	32 to 2552˚F
	NiNiMo	0.0 to 1310.0˚C	32 to 2390˚F
	W/WRe26	0.0 to 2400.0˚C	32 to 4352˚F
	Type N (AWG14)	0.0 to 1300.0˚C	32 to 2372˚F
	Kp vs Au7Fe	0.0 to 300.0K	—
RTD (Measuring contact i=1mA)	Pt25	–200.0 to 550.0˚C	–328.0 to 1022.0˚F
	Pt50	–200.0 to 600.0˚C	–328.0 to 1112.0˚F
	Ni100(SAMA)	–200.0 to 250.0˚C	–328.0 to 482.0˚F
	Ni100(DIN)	–60.0 to 180.0˚C	–76.0 to 356.0˚F
	Ni120	–70.0 to 200.0˚C	–94.0 to 392.0˚F
	J263*B	0.0 to 300.0K	—
	Cu53	–50.0 to 150.0˚C	–58.0 to 302.0˚F
	Cu100*1	–50.0 to 150.0˚C	–58.0 to 302.0˚F

*1: Cu100: α = 0.00425 at 0˚C

Following specifications apply to operation of the recorder under standard operation conditions:
temperature 23± 2°C, humidity 55 ± 10%RH, power supply voltage 90 to 132V, 180 to 264V AC, power supply frequency 50/60Hz ± 1%, warm-up time at least 30 minutes, other ambient conditions like vibration should not adversely affect the recording operation

Reference junction compensation accuracy
When the input terminal temperature is balanced (at least 60 minutes after power-on)
PLATINEL, NiNiMo, W/WRe26, Type N (AWG14): ±1.0°C
PR40-20, KpvsAu7Fe: Without reference junction compensation (fixed at 0°C)

Measurement / Recording Accuracy

Input		Measuring Accuracy	Recording Accuracy
PR40-20*1	0 to450˚C 450 to 750˚C 750 to 1100˚C 1100 to 1900˚C	Not guaranteed ±(0.9% of rdg+3.2˚C) ±(0.9% of rdg+1.3˚C) ±(0.9% of rdg+0.4˚C)	±Measurement accuracy ±0.3% of recording span
PLATINEL		±(0.25% of rdg+2.3˚C)	
NiNiMo		±(0.25% of rdg+0.7˚C)	
W/WRe26	0 to 400˚C 400 to 2400˚C	within ± 15.0˚C ±(0.2% of rdg+2.0˚C)	
Type N (AWG14)		±(0.2% of rdg+1.3˚C)	
Kp vs Au7Fe	0 to 20K 20 to 300K	±4.5K ±2.5K	
Pt25		±(0.15% of rdg+0.6˚C)	
Pt50		±(0.3% of rdg+0.6˚C)	
Ni100(SAMA) Ni100(DIN) Ni120		±(0.15% of rdg+0.4˚C)	
J263*B	0 to 40K 40 to 300K	±3.0K ±1.0K	
Cu53		±(0.15% of rdg+0.8˚C)	
Cu100		±(0.2% of rdg+1.0˚C)	

*1: PR40-20 : No reference junction compensation (0˚C fix)

/P1 : 24VDC/AC Power Supply

Rated power supply: 24VDC/AC
Allowable power supply voltage range:
21.6 to 26.4 VDC/AC
Dielectric strength:
Power supply to ground terminal: 1000VAC
Power Consumption: (approx.)

Supply Voltage	1-4 pen	6 dot	Max.
24VDC	9VA*	10VA*	35VA
24VAC (50/60Hz)	17VA*	18VA*	45VA

* In Balance

/R1: Remote Control

5 are selectable from the below mentioned remote controls.

	Number of settings	Signal
Recording start / stop	1	edge
Chart speed change	1	level
Message printout start*1	5	trigger
Manual printout start	1	trigger
Alarm ACK	1	trigger
Time adjustment (Adjusting the time to a preset time)	1	trigger
Computation start / stop*2	1	edge
Computation reset*2	1	trigger
Batch comment switch*3	1	level
Priorty remote recording*3	1	level
Data save On/Off	1	level

*1 Up to 5 messages can be set
*2 /M1 option is necessary
*3 Available for the model with /BT1 option

Input type: Isolated from the main circuit through a photocoupler, built-in isolated power supply for the input terminals, and shared common.

All Rights Reserved. Copyright © 2009, Yokogawa Electric Corporation

Input type and signal level:
Voltage-free contact
Contact close at 200 Ω or less and contact open at 100 kΩ or graeter.
Open collector
ON voltage: 0.5 V or less (sink current 30 mA or more), leakage current when OFF: 0.25 mA or less
Allowable input voltage: 5 VDC
Singnal type: edge, Level, or trigger (250 ms or more)

/CC1: Calibration correction

Corrects the mesurement value of each channel using segment linearizer approximation.
Number of segment points: 2 to 16
Setting method: Bias, Abolute value
Target Channel: Measurement channel
Target range:
Input range (DCV, TC, RTD)
Linear scaling range (DCV, TC, RTD, 1-5V)
But, DI, Differentioal computation and square root are not included.

/BT1: Header printout

Batch name, comment, time, chart speed are printed in record Start/Stop.
Message printout including measured value/ computation value is available.
The pen offset compensating data can be ejected after recording stops.
- Printout contents:
Batch name: Batch number-Lot number (ON/OFF selectable)
Batch number: Up to 26 characters can be set
Lot number: 4 digits/6 digits/OFF selectable
Start/Stop comment:
Up to 64 characters × 5 lines can be set
Start/Stop time: ON/OFF selectable
Start/Stop chart speed: ON/OFF selectable
- Message printout:
Printout contents
(message format: ON/OFF selectable)
ON: any (date/time, message (up to 16 characters), measured value) can be selected (up to 69 characters)
OFF: Date/time + message (up to 16 characters)

/EM1: SD Memory Card

SD memory cards can be used as external storage media.
Measured data can be saved (The μR20000 does not support FIFO function (overwrite function)) and replayed (only for dot model), and setting parameters can be saved and loaded.
Media: SD card (SD/SDHC) (up to 32 GB)
Format: FAT32 or FAT16
Note: /EM1 modofication is not available.

■ APPLICATION SOFTWARE

With Ethernet (/C7), RS-422A/485 (/C3), or Interface unit, μR20000 setting can be configured.

• RXA10 Configuration Software*

System requirements
OS: Windows 8.1 Update (32-bit and 64-bit editions, desktop mode), Windows 8.1 Pro Update (32-bit and 64-bit editions, desktop mode) / Windows 10 Home (32-bit and 64-bit editions) / Windows 10 Pro (32-bit and 64-bit editions) / Windows 10 Enterprise (32-bit and 64-bit editions) / Windows 10 Enterprise LTSB (32-bit and 64-bit editions) / Windows 10 Enterprise LTSC (32-bit and 64-bit editions) / Windows 11 Home (64-bit editions) / Windows 11 Pro (64-bit editions) / Windows 11 Enterprise (64-bit editions)
Yokogawa will also stop supporting OSs that Microsoft Corporation no longer supports.
Processor:
CPU, Memory:
Windows 8.1, Windows 10:
Intel Core2 Duo E6300 or faster x64 or x86, 2 GB or more
Windows 11:
Core-i5 or faster and 8th generation later Intel processor, 8 GB or more
Hard disk: 100 MB or more (Windows 8.1, Windows 10), 64 GB or more (Windows 11) of free space
CD-ROM drive: A CD-ROM drive supported by the OS.
Mouse: A mouse supported by the OS.
Monitor:
OS compatible display
1024 x 768 dots or higher, 65536 colors or more recommended
Main functions (as a package):
Configuration software:
Configuration via communication:
Configures the station, excluding the communication setting, or sets it in set mode.
* Note This software applies for μR20000 from R2.01 version.

• Interface unit (attached with RXA10 configuration software)

Method of power supply: Power supply from μR20000
Connector type: D-Sub 9-pin plug (male)
Electrical and mechanical specifications:
Conforms to EIA-574 (9-pin EIA-232 (RS232))
RS422A/485 communication interface (/C3) and interface unit cannot work together.

All Rights Reserved. Copyright © 2009, Yokogawa Electric Corporation

- **Universal Viewer (free download)**
  Data files saved on the SD memory card can be loaded and displayed. For specified data, you can also perform statistical computation over an area and export to ASCII, Excel, or other formats.
  http://www.yokogawa.com/ns/

Displaying waveforms with the Viewer

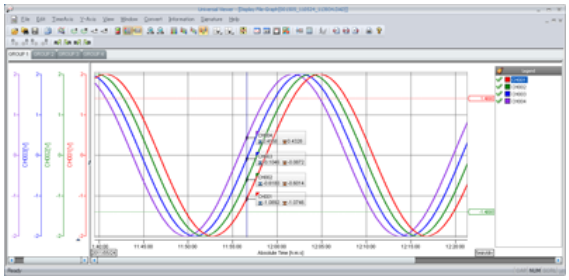

Model Codes

Model code	Suffix code	Option code	Description
437101			µR20000 1 pen recorder
437102			µR20000 2 pen recorder
437103			µR20000 3 pen recorder
437104			µR20000 4 pen recorder
437106			µR20000 6 dot recorder
437112			µR20000 12 dot recorder
437118			µR20000 18 dot recorder
437124			µR20000 24 dot recorder
Language	**-2**		English/German*10/French*10, degF & DST
Option		**/A1**	Alarm output relay (2 contacts) *1
		/A2	Alarm output relay (4 contacts) *1
		/A3	Alarm output relay (6 contacts) *1
		/A4	Alarm output relay (12 contacts) *1
		/A5	Alarm output relay (24 contacts) *1*2
		/BT1	Header printout
		/C3	RS-422A/485 Interface *3
		/C7	Ethernet communication interface *3
		/CC1	Calibration Correction
		/EM1	SD memory card *4
		/H2	Clamped input terminal *5
		/H3	Non-glare door glass
		/H5[ ]*9	Portable Type *8
		/M1	Mathematical Computations
		/N1	Cu10, Cu25 RTD input
		/N2	3 leg RTD (dot printing model only) *5*6
		/N3	Expansion inputs *7
		/P1	24VDC/AC power supply *8
		/R1	Remote controls (5 contacts)

Model Code	Description	OS
RXA10-01	RXA10 Configuration software*	Windows 8.1/10/11
RXA10-02	RXA10 Configuration software* (With interface unit)	Windows 8.1/10/11

* Configuration software can be used for both µR10000 / µR20000.
This software applies for Windows7 from R3.04.01 version.
This software applies for Windows 8.1 from R3.05.01 version.
This software applies for Windows 10 from R3.05.02 version.
This software applies for Windows 10 Enterprise and Windows 11 from R3.06.03 version.

Notes on using the RXA10 Configuration Software
When the /EM1 recorder option is specified, the interface unit supplied with the RXA10 Configuration Software cannot be used. Either specify the /C7 recorder option (Ethernet interface) and communicate via Ethernet, or save the µR settings to an SD memory card and load them from the PC.

*1: only one of /A1, /A2, /A3, /A4, /A5 can be selected
*2: /A5 can be specified only for dot model
*3: /C3 and /C7 can not be specified together
*4: /C3 and /EM1 can not be specified together.
*5: /H2 and /N2 can not be specified together
*6: /N2 can be specified only for dot model
*7: 14 types inputs: Pt50 RTD, PR40-20, PLTINEL TC etc.
*8: /H5[ ] and /P1 can not be specified together
*9: /H5[ ] (D-power cord UL, CSA, st'd, F-Power cord VDE st'd, R-Power cord SAA st'd, J-Power cord BS st'd, H-Power cord GB st'd)
*10: Available from firmware version R1.21

All Rights Reserved. Copyright © 2009, Yokogawa Electric Corporation

STANDARD ACCESSORIES

Name		1 pen	2 pen	3 pen	4 pen	6, 12, 18, 24 dot
Z-fold chart		1	1	1	1	1
6 color ribbon cassette		–	–	–	–	1
Disposable felt-pen cartridge	Red	1	1	1	1	–
	Green	–	1	1	1	–
	Blue	–	–	1	1	–
	Violet	–	–	–	1	–
Plotter pen	Purple	1	1	1	1	–
SD memory card (1GB) (In case /EM1 is specified)		1	1	1	1	1
Mounting brackets		2	2	2	2	2
Operation Manual		1	1	1	1	1

SPARES/OPTIONAL ACCESSORIES

Name		Model Code (Parts No.)	Specification
Z-fold chart		B9573AN	10 (sales unit)
6 color ribbon cassette		B9906JA	1 (sales unit)
Disposable felt-pen cartridge	Red	B9902AM	1 (sales unit, 3 pieces/unit)
	Green	B9902AN	1 (sales unit, 3 pieces/unit)
	Blue	B9902AP	1 (sales unit, 3 pieces/unit)
	Violet	B9902AQ	1 (sales unit, 3 pieces/unit)
Plotter pen	Purple	B9902AR	1 (sales unit, 3 pieces/unit)
SD memory card (1GB)		773001	1 (sales unit)
Mounting brackets		B9900BX	2 (sales unit)
Shunt resistor	(for screw input terminal)	4159 20	250 Ω ± 0.1%
		4159 21	100 Ω ± 0.1%
		4159 22	10 Ω ± 0.1%
	(for clamped input terminal)	4389 20	250 Ω ± 0.1%
		4389 21	100 Ω ± 0.1%
		4389 22	10 Ω ± 0.1%

■ Basic Conditions and Individual Contracts at the Time of Purchase

The warranty for this product is defined in the basic conditions and individual contracts at the time of purchase.
The individual conditions are as follows.

- **Validation**
  Yokogawa does not guarantee the final outcome of validation work even if there is a defect in the product.
  For the warranty of validation services, please contact the company that performed the validation work.
- **Warranty period of firmware**
  The firmware warranty period is one year.

- Microsoft, MS and Windows are registered trademarks of Microsoft Corporation USA.
- Modbus is a registered trademark of AEG Schneider
- Other company and/or product names are registered trade mark of their manufactures.

Documents and Downloads

You can download the latest various documents from the following website.

http://www.yokogawa.com/ns/mr/im/

All Rights Reserved. Copyright © 2009, Yokogawa Electric Corporation

REAR TERMINAL ARRANGEMENTS

Screw Type Input Terminal

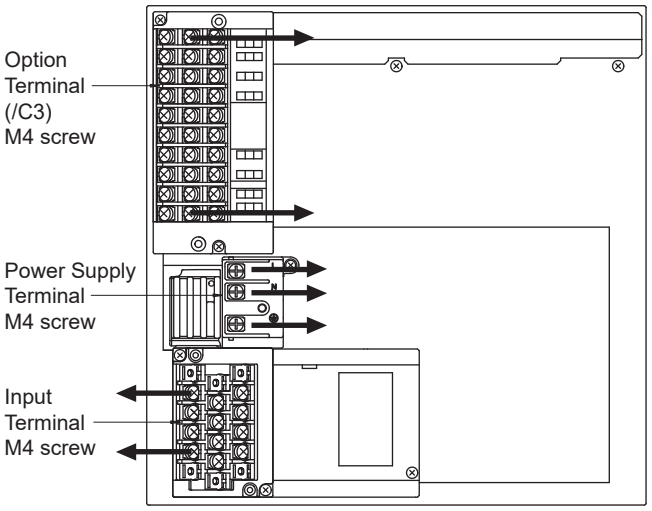

(4 pen model)

Note : The arrows show the direction in which the wires will be running when connected to the terminal.

Clamped Type Input Terminal

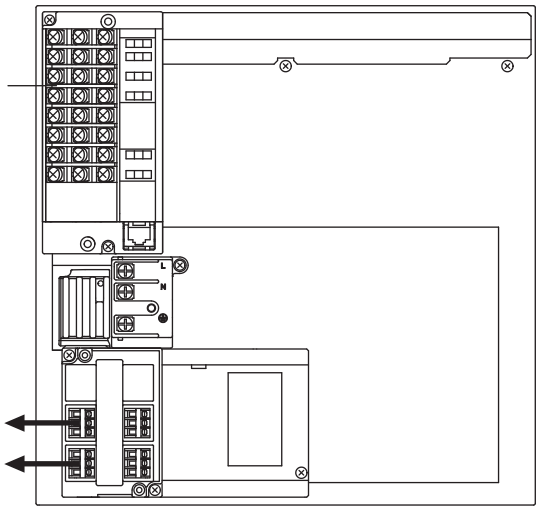

(4 pen model)

Weight :
Model 4371 01 : Approx. 7.8kg
Model 4371 02 : Approx. 7.8kg
Model 4371 03 : Approx. 7.9kg
Model 4371 04 : Approx. 7.9kg

If /C7 is specified and /A☐ and /R1 are not specified, the function of the accessory screw terminal block is not available.

Screw Type Input Terminal

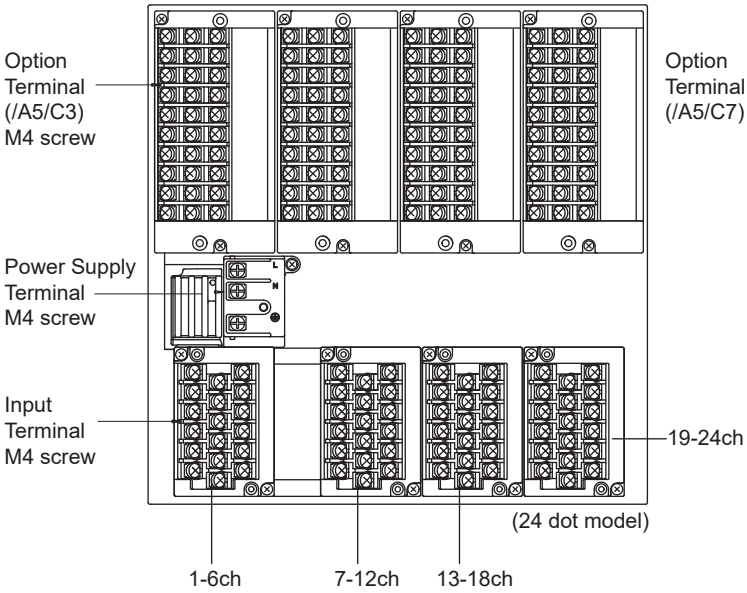

(24 dot model)

Clamped Type Input Terminal, 24VDC/AC power supply (/P1)

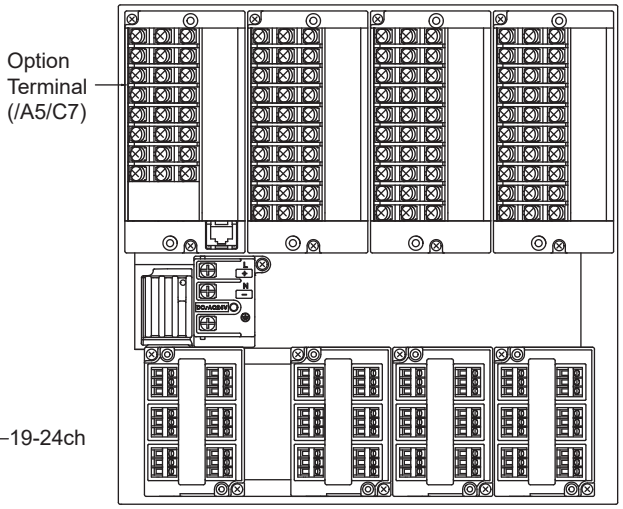

(24 dot model)

Weight :
Model 4371 06 : Approx. 8.4kg
Model 4371 12 : Approx. 8.6kg
Model 4371 18 : Approx. 8.8kg
Model 4371 24 : Approx. 9.0kg

Input Terminals

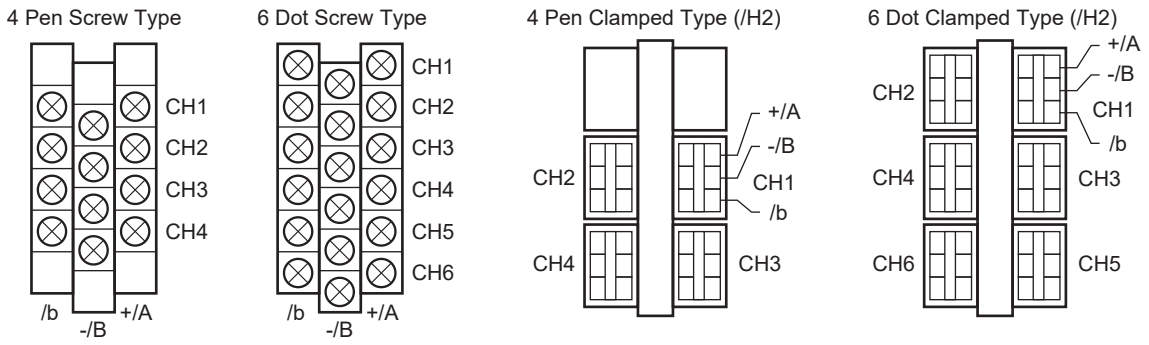

All Rights Reserved. Copyright © 2009, Yokogawa Electric Corporation

Option Terminals

/A2 /C3 /R1 Combination

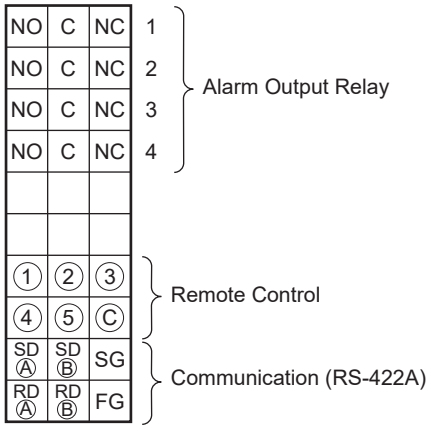

/A4 /C3 /R1 Combination

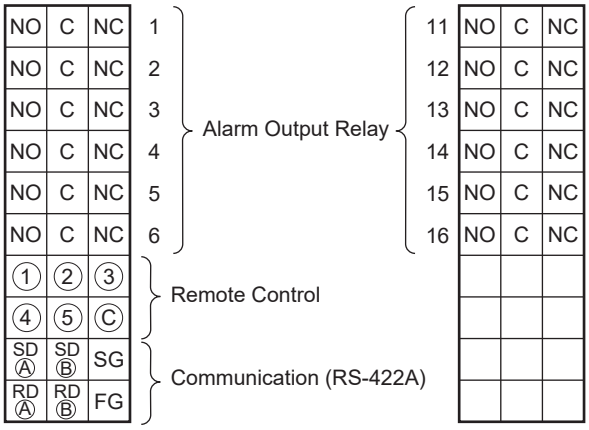

/A4

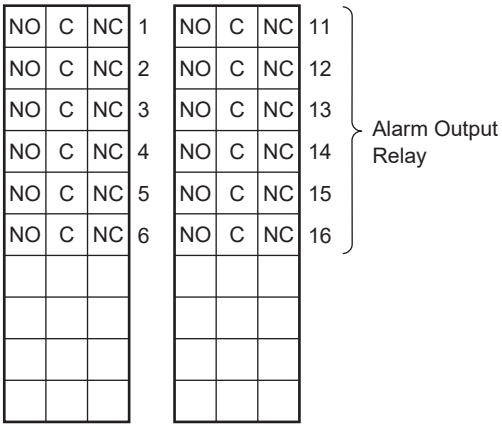

/A5

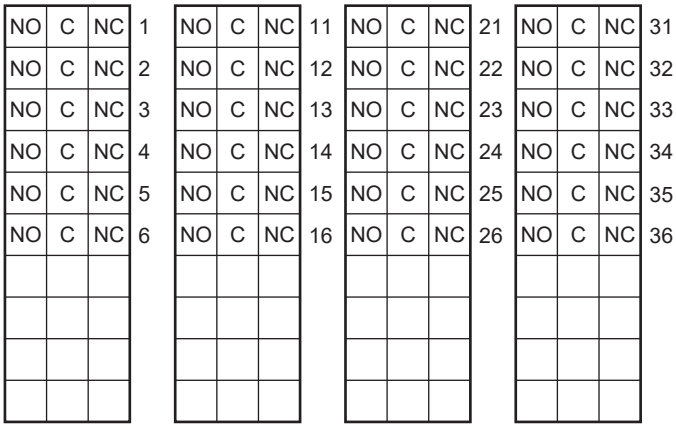

F05.ai

NOTE: Compatibility with Input Terminals and Option Terminals of Older Models
The input and option terminals of this instrument are specific to this instrument. Do not connect to the input terminals or option terminals of the μR1800, or other models as malfunction can result.

All Rights Reserved. Copyright © 2009, Yokogawa Electric Corporation

DIMENSION

Unit : mm
(approx. inch)

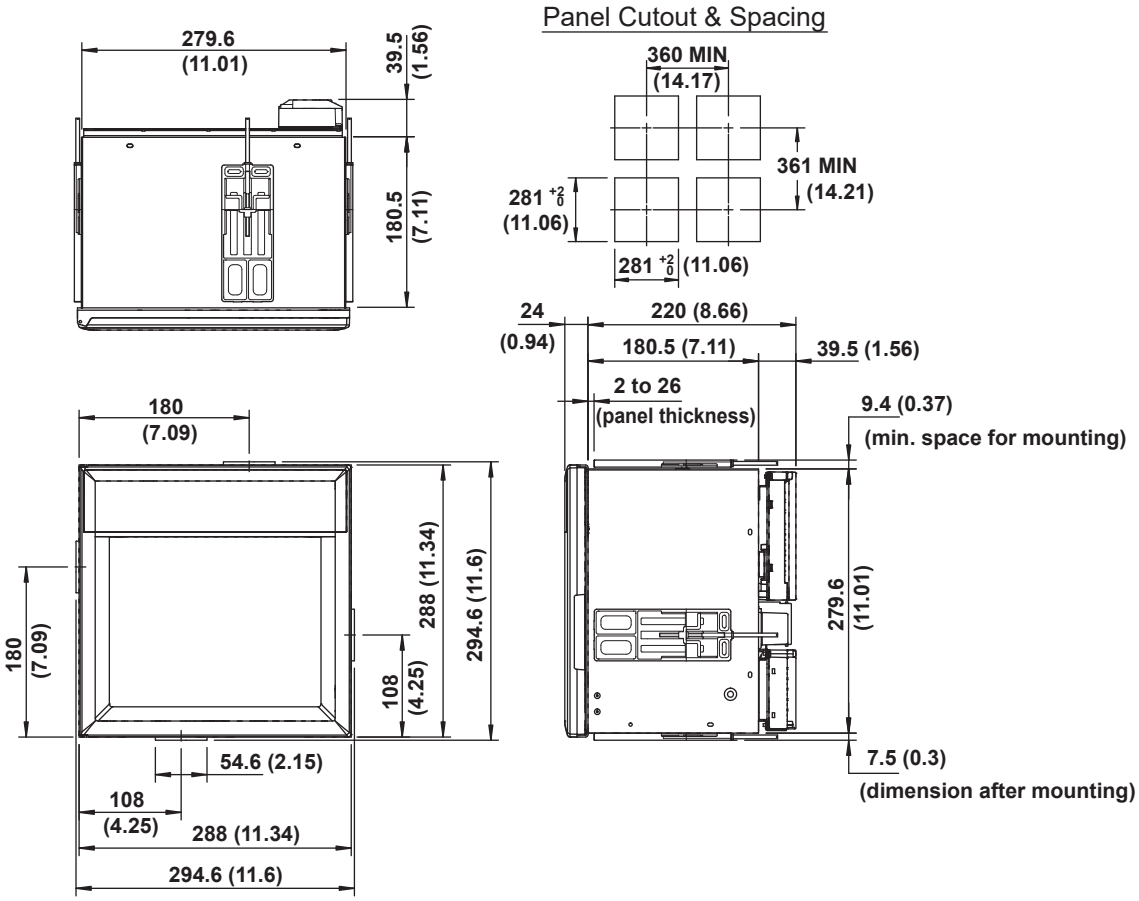

Note) The μR20000 should be mounted by only two brackets, either on the top & bottom of the recorder, or on the left & right side of the recorder.
If not specified, the tolerance is ± 3%. However, in cases of less than 10mm, the tolerance is ± 0.3mm.

F06.ai

All Rights Reserved. Copyright © 2009, Yokogawa Electric Corporation

DIMENSION (Portable Type)

Unit : mm
(approx. inch)

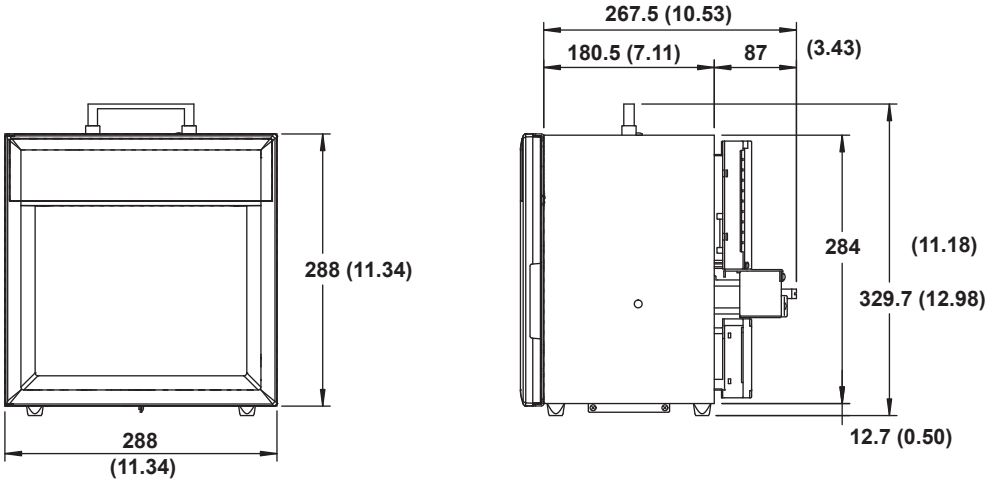

Terminal Arrangement

Screw Type Input Terminal
RS-422A/485 Interface (/C3)

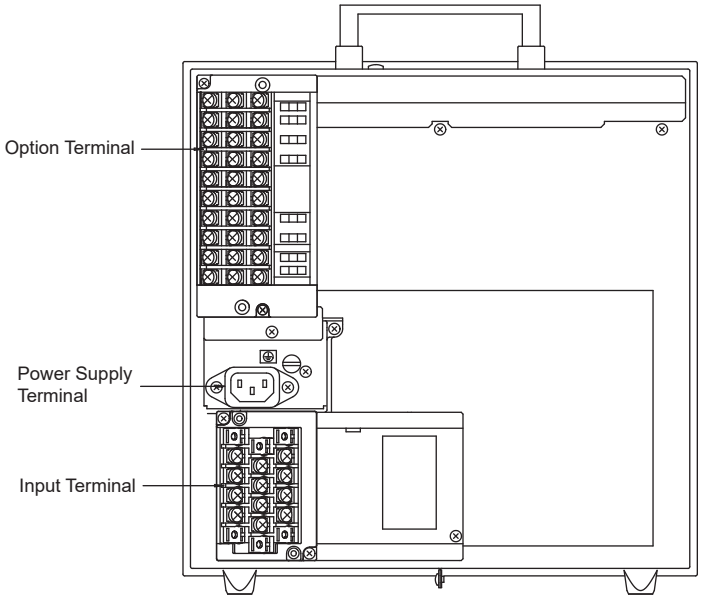

(4 pen model)

Clamped Type Input Terminal
Ethernet (10BASE-T) Interface (/C7)

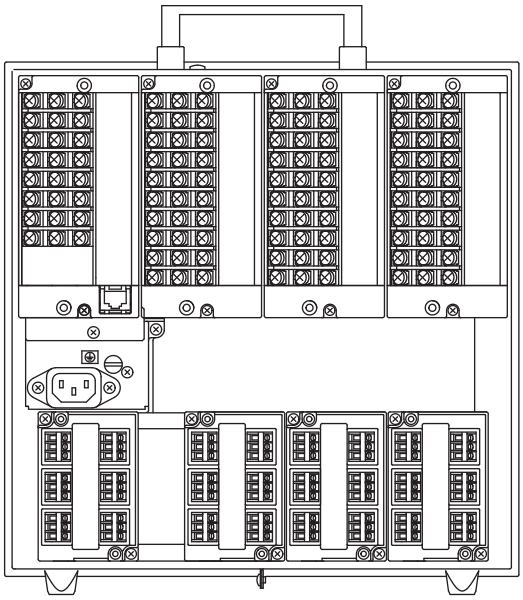

(24 dot model)

Weight:
Model 4371 01 /H5 : Approx. 9.5kg
Model 4371 02 /H5 : Approx. 9.5kg
Model 4371 03 /H5 : Approx. 9.6kg
Model 4371 04 /H5 : Approx. 9.6kg

Weight:
Model 4371 06 /H5 : Approx. 10.1kg
Model 4371 12 /H5 : Approx. 10.3kg
Model 4371 18 /H5 : Approx. 10.5kg
Model 4371 24 /H5 : Approx. 10.7kg

Note: mahe sure to use the appropriate power cord, matching the power outlet.

If not specified, the tolerance is ± 3%. However, in cases of less than 10 mm, the tolerance is ± 0.3 mm.

F07.ai

NOTE: Compatibility with Input Terminals and Option Terminals of Older Models
The input and option terminals of this instrument are specific to this instrument. Do not connect to the input terminals or option terminals of the μR1800, or other models as malfunction can result.

All Rights Reserved. Copyright © 2009, Yokogawa Electric Corporation
Subject to change without notice.