General Specifications

GP10/GP20
Paperless Recorder
(Portable type)

SMARTDAC+

GS 04L52B01-01EN

■ OVERVIEW

The GP10/GP20 are portable type paperless recorders that display real-time measured data on a touch screen and save data on an external storage medium (SD card).

For the input/output module specification, please see GX90XA/GX90XD/GX90YD/GX90WD Input/Output Module General Specification (GS 04L53B01-01EN.)

- The number of analog input is a maximum of 100 channels in GP10 with expandable I/O, and a maximum of 450 channels in GP20 with expandable I/O.
  * Max. number of input/output channels is 500 channels.
- The GP10/GP20 have the large internal memory (GP10/GP20 standard type: 500MB, GP20 large memory type: 1.2 GB), and prolonged record and preservation are possible.
- As the input signal, a DC voltage, thermocouple, resistance temperature detector, DI (DCV input (TTL), contact signal), or mA (DC current) can be set to each channel.
- Input and output have module structure and it can extend them easily. (GP10: max. 3*, GP20: max. 10*)
  * In case of using expandable I/O, GP10 can extend two units, GP20 can extend 9 units.
- A module type is four types, an analog input, a digital input, a digital output, and a digital input/output.
- A maximum of six units of expandable I/O can be connected to GP10/GP20. Each expandable I/O can incorporate a maximum of six modules. With expandable I/O connected, the large memory type GP10 and GP20 can use multiple channels. Furthermore, the I/O ports can be installed in separate locations from where GP10/GP20 is located, helping you reduce wiring requirements and build a decentralized configuration.
- The intuitive operation by flick, pinch in, pinch out, and swipe are possible.
- The past trend under recording can be seamlessly displayed on a trend screen.
- Moreover, the measurement data of the time specified on the calendar screen can be searched and displayed.
- Various functions, such as a freehand message, a PDF/Excel output of a report file, a direct output to a network printer, a scale movement of a trend display, and a buzzer sound, are equipped.
- It can be hooked up to network via Ethernet, which enables to inform by Email and to monitor on Web site as well as to transfer files by using FTP. Also, it can communicate with Modbus/RTU or Modbus/TCP.
- A setup of GP can be performed on-line from the web browser on PC. A setup by off-line is also possible.
- Universal Viewer software allows a PC to display waveforms on its screen and to print out waveforms.

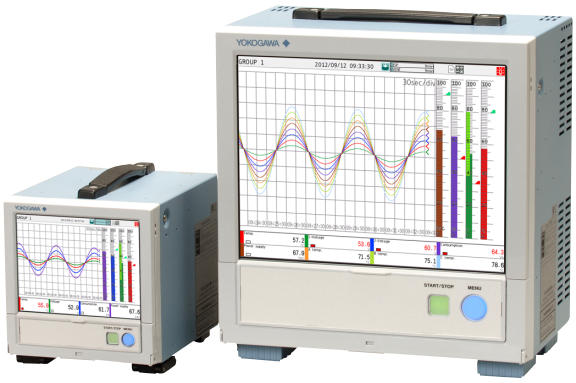

GP10 GP20

- The measuring accuracies noted in the general specifications have a margin of error that takes into account the product's components and the equipment used for adjustment and testing. However, the actual values calculated from the accuracy testing data upon shipment of the instrument from the factory are as follows.

Input type		Measuring accuracy*1 (typical value*2)
DCV	20 mV	± (0.01% of reading + 5 μV)
	6V (1-5V)	± (0.01% of reading + 2 mV)
RTD	Pt100	± (0.02% of reading + 0.2 °C)
	Pt100 (high resolution)	± (0.02% of reading + 0.16 °C)

*1 General operating conditions: 23±2 ºC, 55±10% RH, supply voltage 90–132, 180–250 VAC, supply frequency within 50/60 Hz ±1%, warm-up of 30 minutes or more, no vibrations or other hindrances to performance.
*2 For the measuring accuracy (guaranteed), see the module's general specifications (GS04L53B01-01EN).

■ MAIN UNIT SPECIFICATIONS

■ FUNCTIONAL SPECIFICATION

Input Specifications

Please see GX90XA/GX90XD/GX90YD/GX90WD I/O Module General Specifications.

Model	Name	General Specification No.
GX90XA	Analog input module	GS 04L53B01-01EN
GX90DX	Digital input module	
GX90YD	Digital output module	
GX90WD	Digital input/output module	

©Copyright Octorber 2012
10th Edition May. 22, 2014

Measuring Functions

- The number of installable modules and I/O channels (total for GP and expandable I/O)

GP10/GP20 standard type

Item	GP10/GP20 standard type
Number of module	Max. 10
Number of input/output module	Max. 100

GP20 large memory type

Item	GP20 large memory type
Number of module	Max. 45
Number of input/output module	Max. 500 (or max. 450 for AI only)

Restrictions of module connection:

- A maximum of 10 modules can be installed, as a total for GX90YD digital output modules and GX90WD digital I/O modules.
- A maximum of one GX90WD digital I/O module can be installed in GP and in each expandable I/O.
- Expandable I/O connection
  Number of connectable units: Max. 6

  Caution
  If the maximum number of I/O channels are assigned and the last channel is assigned to an intermediate channel of a module, that module and subsequent modules will not be recognized.

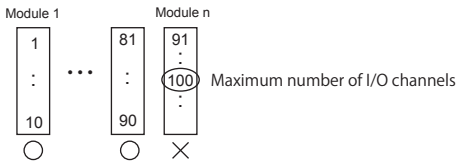

Display Functions

Display groups:

Number of groups; GP10: 30, GP20 standard type: 50, GP20 large memory type: 60
Number of channels that can be assigned to each group; GP10: 10, GP20: 20
Scan interval: 100*1*2, 200*1*2, 500 ms*1, 1, 2, 5 s

*1 Cannot be specified if an electromagnetic relay scanner type (Type Suffix Code: -T1) analog input module is in use.
*2 Cannot be specified for L-model DCV/TC/DI, scanner type (Type Suffix Code: -L1).

Display color (Trend/Bar graph/Digital display):

Channel: Select from 24 colors
A desired display color can be selected freely using its RGB value.
Background: Select from white or black

Display type:

- Trend display (T-Y)
  Display method:
  Direction: Horizontal, vertical
  Trend interval: 5*1*2, 10*1*2, 15*1, 30 s/div, 1, 2, 5, 10, 15, 20, 30 min/div, 1, 2, 4, 10 h/div

  *1 Cannot be specified if an electromagnetic relay scanner type analog input module is in use.
  *2 Cannot be specified for L-model DCV/TC/DI, scanner type (Type Suffix Code: -L1).

  Trend line width: Thick, normal, thin
  Scale; GP10: Max. 6, GP20: Max. 10
  Current value bar graph, color scale band, and alarm point marks can be displayed on the scale.
  Moving scale; Scale can be moved on any waveform.
  A bitmap image scale can be attached.
  Others; Grid (Auto, 4 to 12), Trip line, Message, Zone display, Partial expanded display
- Historical trend display (T-Y display)
  Redisplays the display data or event data in the internal memory or external storage medium
  Time axis operation: The time axis can be reduced or expanded.
  Data search: Waveforms from the internal memory can be displayed through the specification of a date and time, calendar, each summary
  Moving scale; A bitmap image scale can be attached.
  All historical trends can be displayed in one screen.
- Bar graph display
  Direction: Vertical or horizontal
  Scale: Display a scale for each channel
  Color scale band, and alarm point marks can be displayed on the scale.
- Digital display
  Displays measured values numerically
  A DI input state can be displayed as an arbitrary character string (0=Off/1=On, etc.)
  Update rate: 0.5 s
- Overview display
  Display format: All channels, each groups
  Displays the measured values of all channels and the alarm statuses
- Alarm summary display
  Displays a log of up to 1000 alarms
  Specify an alarm with the cursor and jump to the corresponding section on the historical trend display.
- Message summary display
  Time and content of up to 500 messages (including 50 add messages)
  Specify a message with the cursor and jump to the corresponding section on the historical trend display.
- Memory summary display
  Displays the information (up to 500) of the data in the memory
  Specify a file with the cursor and jump to the corresponding section on the historical trend display.
- Report display
  Displays the report data residing in the internal memory
  For more details, see "MATHEMATICAL FUNCTIONS WITH REPORT FUNCTION (/MT)."
- Log display
  Displays the event log, error log, communication log, FTP log, Web log, e-mail log, SNTP log, DHCP log, and Modbus log.
- Multi-panel display
  Divides the screen into two to six sections and displays some different display formats.

All Rights Reserved. Copyright © 2012-2014, Yokogawa Electric Corporation

- Internal switch/relay state display
  Displays the internal switch and ON/OFF state of DO
  Operates the internal switch and ON/OFF state
- Other displays
  Network information display
  System information display
  System configuration display

Auto scroll:

The displayed groups can be automatically switched at a specified interval.
The display switches in ascending group order.

Names of channels:

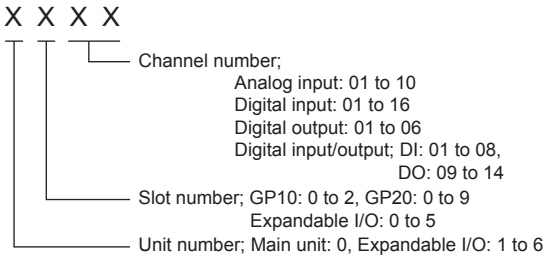

Tags:

- Tag and Tag numbers can be displayed.
- Tag number; Number of characters: Up to 16
  Displayable characters: Alphanumeric characters
  Tag numbers can be enabled or disabled.
- Tag; Number of characters: Up to 32
  Displayable characters: Alphanumeric characters

Message:

- Write messages to the trend display.
- Number of messages: 100
- Number of characters: Up to 32
- Write method: Write a preset message or write an arbitrary message on the spot.
- Write destination: Select only the displayed group or all groups.
- Auto message: Write a message when the GP recovers from a power failure while memory sampling is in progress.
  Write a message when the trend interval is switched during memory sampling.

Add message:

- Write messages to the past data positions.
- Message: The same as the “Message” item above
  Number of writable messages per file: 50 messages (including 10 freehand messages)

Freehand message:

- Can be written by dedicated pen.
  Number of writable messages per file: 50 messages (including 10 Add messages)

Data Saving Functions

Internal memory:

- Temporarily saves various types of data.
- Medium: Flash memory
- File storage capacity;
  GP10, GP20 standard type: 500 MB
  GP20 large memory type: 1.2 GB

External storage medium:

- Medium SD card (SD/SDHC) (up to 32 GB)
- Format: FAT32 or FAT16

Data type:

- Display data, Event data, Alarm summary data, Manual sampled data, Screen image data, Setup data, and Report data

Display data:

- Target: Measurement (input/output module)/ math/communication channels, alarm summary, message summary
  Description: Maximum or minimum value per recordling interval
- Recording intervals: Determined by the trend interval, recording data type (display data/display data + event data, GP20 large memory type)
  For GP20 standard type

Trend interval (div)	Number of channels
5 s	100
10 s	200
15 s or longer	500

For GP20 large memory type

Trend interval (div)	Number of channels	
	Display data	Display data + Event data
5 s	200	100
10 s	500	200
15 s	1000	500
30 s or longer	1000	1000

Note that the maximum number of channels is fixed at 100 in the GP10.

- Data size;
  Analog input data: 12 bytes/ch.
  Digital I/O data: 4 bytes/ch.
  Math channel data: 12 bytes/ch.
  Communication channel data: 12 bytes/ch.
- File size: Up to 18 MB
- Number of files for GP10, GP20 standard type: Up to 500 (including event data), for GP20 large memory type; Up to 1000 (including event data)
  Operation in the internal memory: FIFO (First In First Out)
- Data format: Binary or text
- Recording: Records data at all times.
- Display data file sample time
  Measurement channel = 30. Math Channel = 0

Internal Memory	500 MB
Trend interval (minute/div)	30 minutes
Recording interval (s)	60 s
Total sample time	Approx. 2.5 years

Event data:

- Target: Measurement (input/output module)/ math/communication channels, alarm summary, message summary, operation log
  Description: Instantaneous value per recording interval
- Recording intervals: Determined by the sample rate, recording data type (display data/display data + event data, GP20 large memory type)

All Rights Reserved. Copyright © 2012-2014, Yokogawa Electric Corporation

For GP20 standard type

Sampling rate	Number of channels
100 ms	100
200 ms	200
500 ms or longer	500

For GP20 large memory type

Trend interval (div)	Number of channels	
	Display data	Display data + Event data
100 ms	500	100
200 ms	500	200
500 ms	1000	500
1 s or longer	1000	1000

Note that the maximum number of channels is fixed at 100 in the GP10.

Note that the maximum number of channels is fixed at 100 in the GP10.

- Data size;
  Analog input data: 6 bytes/ch.
  Digital I/O data: 2 bytes/ch.
  Math channel data: 6 bytes/ch.
  Communication channel data: 6 bytes/ch.
- File size: Up to 18 MB
- Number of files for GP10, GP20 standard type: Up to 500 (including display data), for GP20 large memory type; Up to 1000 (including display data)
- Operation in the internal memory: FIFO (First In First Out)
- Data format: Binary or text
- Mode; Free: Records data at all times.
  Trigger: Starts recording data when a certain event occurs and records for the specified interval.
  Repetition trigger: Repeat Trigger mode
- Event data file sample time
  Measurement channel = 30. Math Channel = 0

Internal Memory	500 MB
Recording period (s)	1 s
Total sample time	Approx. 1 month

Alarm Functions

- Number of alarms: Up to four alarms (level) for each measurement channels
- Alarm type: High limit, low limit, difference high limit, difference low limit, high limit on rate-of-change alarm, low limit on rate-of-change alarm, delay high limit, and delay low limit
- Alarm delay time: 1 s to 24 hours (for each channel)
- Rate-of-change calculation interval of rate-of-change alarms: 1 to 32 times the scan interval (common to all channels)
- Hysteresis: 0.0 to 5.0% of the span (for each alarm (level))
- Alarm output: Output to the internal switch
  Internal switch operation: AND/OR operation selectable
- Display: Displays the status on the respective operation screen and an alarm icon on the status display section when an alarm occurs.
  Display operation: Hold or not hold the display until the alarm acknowledge operation
- Alarm hide function (alarm no logging function)
  Not display alarms nor record to the alarm summary (for each channel)
- Alarm information: Displays a log of alarm occurrences on the alarm summary
- Reflash: The duration for which the reflash relays are deactivated can be set to 500 ms, 1 s, or 2 s.
- Individual alarm ACK function:
  Alarm display and relay output can be cancelled on individual alarms

Event Action Functions

- Event action: Execute a specified operation when a given event occurs.
- Number of settings: 50
  Events: Remote control input, etc.
  Timer; Number of timers: 4
  Match time timer; Number of timers: 4
  Action: Specify memory start/stop, alarm ACK, etc.

Security Functions

- Operation lock function: Limitations to touch operation, access to the external storage medium, and various operations
- Login function: Only registered users can operate the GP.
  It can be set to each of touch operation and communication access.
  System administrators and Users: 50 (totally)
  Number of Authority of user: 10 level

Manual Sampled Data

- Item: Instantaneous value at an arbitrary time
- Target: Measurement (input/output module)/ math/communication channels
- Number of recording channels;
  GP10, GP20 standard tyep: Max. 50
  GP20 large memory type: Max. 100
- Maximum number of data values that the internal memory can store: 400
- Data format: Text

Report Data

- Item: Report at each scheduled time of report
- Target: Measurement (input/output module)/ math/communication channels
- Maximum number of reports that the internal memory can store: 800
- Data format: Text

Snapshot Data

- Item: Displayed screen image data
- Data format: PNG
- Output destination: External medium or communication output

Setup Data

- Item: GP setup data
- Data format: text
- Output/read destination (for saving/loading): External medium

All Rights Reserved. Copyright © 2012-2014, Yokogawa Electric Corporation

Clock Functions

- Clock: With a calendar function
- Accuracy: ± 5 ppm (0 to 50°C), excluding a delay (of 1 second, maximum) caused each time the power is turned on.
- Time setting: Using touch operation, communication command, event action function, or SNTP client function
- Time adjustment method:
  Limit in which the time is gradually adjusted: Select from the available settings between 5 s and 15 s.
  Whether to change an out-of-limit operation immediately or report it as an error can be selected.
  While memory sampling: Corrects the time by 1 ms for each second.
  While memory is stopped: Immediately change the time.
- DST: The date/time for switching between standard time and DST can be specified.
- Time zone: Sets the time difference from GMT.
- Date format: Select "YYYY/MM/DD", "MM/DD/YYYY", "DD/MM/YYYY" or "DD.MM.YYYY".
  MM expression can be selected from the numeric character or ellipsis. Ex. January: 01 or Jan
  The delimiter can be selected from "/", ".", "-".

Ethernet Communication Functions

- Electrical specifications: Conforms to IEEE 802.3
- Connection: Ethernet (10BASE-T/100BASE-TX)
- Max. segment length: 100 m
- Max. connecting configuration: Cascade Max. 4 level (10BASE-T), Max. 2 level (100BASE-TX)
- Connector: RJ-45
- Protocols: TCP, UDP, IP, ICMP, ARP, DHCP, HTTP, FTP, SMTP, SNTP, Modbus, and dedicated protocols
- E-mail client: Automatically send e-mail at specified times.
  E-mail is sent by events as below.
  - Alarm occurring/alarm canceling
  - Recover from power failure
  - Report data generating
  - Storage medium error, FTP client function error
  - Specified time period

  POP before SMTP and SMTP authentication (PLAIN and CRAM-MD5) is available.
- FTP client: Automatically transfer data files to the FTP server.
  Applicable files: Display data, event data, screen image data, report data, etc.
- FTP Server: Transfer files, delete files, manipulate directories, and output file lists of the GP.
  Number of the simultaneous connection: Max. 4
- Web server: GP real-time monitoring and setting changes/operations can be performed with the Web browser.
  Number of the simultaneous connection: Max. 4
- SNTP client: Inquires the time to the SNTP server and sets the GP.
- SNTP server: Outputs the GP time.
  Time resolution: 5 ms
- DHCP client: Automatically obtain the network address settings from the DHCP server.
- Modbus client: Reads data from another device and writes to the registers.
  Number of connectable sever;
  GP10, GP20 standard type: Max. 16
  GP20 large memory type: Max. 32
- Modbus server: Loads measurement and math channel data
  Loads and writes communication channel data
  Some control commands such as memory start
  Modbus client* register access limitations
  *: Required /MC option
  Number of the simultaneous connection: Max. 4
- Setting/Measurement server: Operate, set, and output data of the GP using a dedicated protocol.
- DARWIN compatible communication server: Supports some DARWIN commands
  Communication with GP is possible using DARWIN communication commands.
- Output-related commands: Output measurement (IO) channel data, Output calculation channel data, Output relay status, Output the position of the decimal point for the measurement (IO) channel, Output the position of the decimal point for the calculation channel, Output the information on system configuration
- Setup-related commands: Range, Scale unit, Alarm, Time, Moving average
- Operation-related commands: Reset alarm, Reset timer, Start MATH calculation, Rebuild system, Initialize, Input communication, Output communication DO, Write message

Batch Function

- Function: Data management using batch names.
  Enter text fields and batch comments in the data file.
- Batch name: Added to the file name of the display data and event data.
  Structure: Batch number (up to 32 characters) + lot number (up to 8 digits)
  Use/not use selectable for lot number, on/off selectable for auto increment function.
- Text field: Adds text to the display data and event data.
  There are 24 available text fields.
  Up to 20 title characters and 30 other characters can be entered per field.
- Batch comment: Adds text to the display data and event data.
  3 comments (max. 50 characters) are available.

Printer Output Function

- Snapshot Data can be printed out with any LAN-connected printer supporting the HP-PCL5c language.

SSL Communication Functions

Communication that sends and receives information encrypted by the SSL (Secure Socket Layer) protocol is possible.

- Server function:
  Supported servers: HTTP server and FTP server (Port number: 443 when encryption is used)
  Private key: Created in GP and saved in the internal memory
  Server certificate: Server certificates created by users can be saved in the internal memory.
  Self-signed certificates can be created in GP.

All Rights Reserved. Copyright © 2012-2014, Yokogawa Electric Corporation

- Client function:
  Supported clients: FTP client and SMTP client (Port number: 443 when encryption is used)
  Trusted certificate: Trusted certificates (a total of up to 100 KB) can be saved in the internal memory.

Electronic Signature Function

Electronic signatures can be added to report files created in PDF format using the PDF form creation function. An electronic signature is provided each time a report file is created.

- Certificate for electronic signature: Certificates for electronic signatures created by users can be saved in the internal memory.

Other Functions

- Buzzer: GP makes a buzzer sound at touch screen operation, or when alarm occurs.
- Backlight saver function: Dim or turn off the LCD backlight if there is no key operation for a specified time.
- Favorite display: Register frequently used displays to the Favorite and show them through simple operation.
- The main alarm is indicated using the MENU key LED.
  No alarm: Blue (same condition as power-on)
  Alarm condition: Red.
- User function feature: A button (user function key) to which the user can assign a desired function is provided. It can be assigned to an event triggered by the event action function.
- Firmware update function: The Web application, the IO module, or the expansion module firmware can be updated by operating GP.

■ HARDWARE SPECIFICATIONS (MAIN UNIT)

Display

Display unit*:
GP10: 5.7-inch TFT color LCD (640 × 480 dots)
GP20: 12.1-inch TFT color LCD (800 × 600 dots)

* A small number of missing or steady-on LCD pixels and minor variations in brightness uniformity is a normal display characteristic and not a malfunction.

Touch screen:
4 wire resistive touch screen

Construction

- Material;
  Case: Metal plate
  Bezel and display cover: Polycarbonate
- Color;
  Case: Smoke blue
  Bezel: Charcoal grey light
- External dimensions:
  When installing modules
  GP10: 144(W) × 168(H) × 248(D) mm
  GP20: 288(W) × 318(H) × 248(D) mm
  When uninstalling modules
  GP10: 144(W) × 168(H) × 197(D) mm
  GP20: 288(W) × 318(H) × 197(D) mm
  (D: depth from the panel mounting plane)
- Weight:
  GP10: Approx. 1.9 kg, GP20: Approx. 5.4 kg (excluding modules)

Power Supply

- Rated supply voltage: 100 to 240 VAC
- Allowable power supply voltage range: 90 to 132, 180 to 264 VAC
- Rated power supply frequency: 50/60 Hz
- Power consumption:

Supply voltage	LCD backlight off	Normal operation	Maximum
100 V AC	GP10: 16 VA GP20: 28 VA	GP10: 20 VA GP20: 34 VA	GP10: 48 VA GP20: 90 VA
240 V AC	GP10: 24 VA GP20: 38 VA	GP10: 30 VA GP20: 45 VA	GP10: 60 VA GP20: 110 VA

* The following combinations are assumed for LCD backlight off and normal operation.
GP10: 1 AI module, 1 DO module, 1 DI module
GP20: 5 AI modules, 4 DO modules, 1 DI module

- Module power supply voltage: The total allowable power consumption of respective modules is up to 6 W in the GP10 and up to 20 W in the GP20.
- Allowable interruption time: Less than 1 cycle of the power supply frequency

All Rights Reserved. Copyright © 2012-2014, Yokogawa Electric Corporation

Isolation

- Insulation resistance: Between the Ethernet, RS-422/485, and each insulation terminals and earth: 20 MΩ or greater at 500 VDC
- Withstand voltage:
  Between the power terminal and earth: 3000 V AC at 50/60 Hz for one minute
  Between the contact output terminal and earth: 3000 VAC at 50/60 Hz for one minute
  Between the input/output modules and earth: Depends on the specification of I/O module.
- Grounding: Be sure to set a low grounding resistance.
- Isolation:

<table>
<tr><td rowspan="5">Power terminal</td><td>FAIL output terminal</td><td rowspan="5"></td></tr>
<tr><td>Ethernet port</td></tr>
<tr><td>RS-422/485 terminal</td></tr>
<tr><td>Input and output module terminal</td></tr>
<tr><td colspan="2">Input and output module internal circuit
Earth (PE) terminal
RS-232 terminal
SD card slot
USB port
Internal circuit</td></tr>
</table>

The circuits divided by lines are insulated mutually.

Safety and EMC Standards

- CSA: CSA22.2 No.61010.1, installation category II (*1), and pollution degree 2 (*2), and CSA-C22.2 NO. 61010-2-030-12
- UL: UL61010-1, UL 61010-2-030 (CSA NRTL/C)
- CE:
  EMC directive
  EN61326-1 compliance, Class A Table 2
  EN61000-3-2 compliance
  EN61000-3-3 compliance
  EN55011 Class A Group 1
  Low voltage directive
  EN61010-1, EN 61010-2-030
  Installation category II (*1)
  Pollution degree 2 (*2)
  Measurement category II (*3)
- C-Tick: EN55011 compliance, Class A Group 1
- KC marking: Electromagnetic wave interference prevention standard, electromagnetic wave protection standard compliance

*1 Installation category (overvoltage category) II:
Describes a number which defines a transient overvoltage condition.
Implies the regulation for impulse withstand voltage.
"II" applies to electrical equipment which is supplied from the fixed installation like a distribution board.

*2 Pollution degree 2:
Describes the degree to which a solid, liquid, or gas which deteriorates dielectric strength or surface resistivity is adhering.
"2" applies to normal indoor atmosphere.
Normally, only non-conductive pollution occurs.

*3 Measurement category: Depends on the specification of each modules

Category	Measurement category	Description	Remarks
II	CAT II	Available in the testing and measuring circuits directly connected to a usage location (receptacle or the like) of a low-voltage main power supply facility.	Appliances, portable equipment, etc.
III	CAT III	Available in the testing and measuring circuits connected to a power distribution portion of a low-voltage main power supply facility.	Distribution board, circuit breaker, etc.
IV	CAT IV	Available in the testing and measuring circuits connected to a power source of a low-voltage main power supply facility.	verhead wire, cable systems, etc.

- WEEE Directive: Compliant

Normal Operating Conditions:

- Power supply voltage: 100 to 240 V AC ±10 %
- Power supply frequency: 50/60Hz ±2 %
- Ambient temperature: 0 to 50°C
- Ambient humidity: 20 to 80 %RH (at 5 to 40°C) (no condensation)
- Magnetic field: 400 A/m or less (DC and 50/60 Hz)
- Vibration:
  5 ≤ f < 8.4 Hz amplitude 3.5 mm (peak)
  8.4 ≤ f ≤ 160 Hz acceleration 9.8 m/s^2
- Shock (IEC-60068-2-27):
  Non-energization, 500 m/s^2 or less, approximate 10 ms, 6 directions (±X, ±Y, ±Z), 3 times in each direction
- Mounting position: Can be inclined up to 30 degrees backward. Left and right horizontal when installing the panel mount and wall mount.
- Altitude: 2000 m or less
- Installation location: Indoors
- Warm-up time: At least 30 minutes after power on

Other Specifications:

- Memory backup: A built-in lithium battery backs up the settings and runs the clock
- Recommended replacement periods of Battery: Approximately 10 years (at room temperature)

Transport and Storage Conditions:

- Ambient temperature: –25 to 60°C
- Ambient humidity: 5 to 95 %RH (no condensation)
- Vibration: 10 to 60 Hz, 4.9 m/s^2 maximum
- Shock: 392 m/s^2 maximum (in packaged condition)

All Rights Reserved. Copyright © 2012-2014, Yokogawa Electric Corporation

■ EXTERNAL DIMENSIONS AND PANEL CUTOUT DIMENSIONS

GP10:

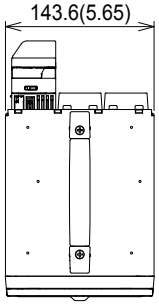

Unit: mm (approx. inch)
Unless otherwise specified, tolerance is ±3% (however, tolerance is ±0.3 mm when below 10 mm).

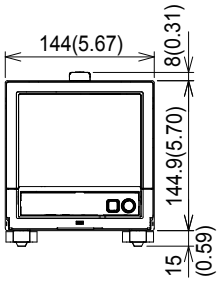

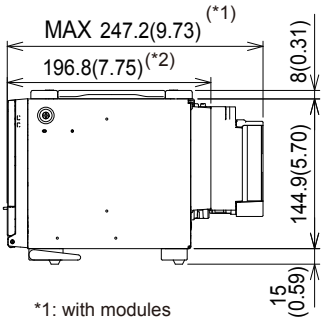

*1: with modules
*2: without moduels

Rear view

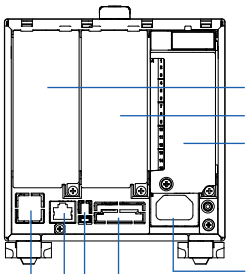

GP20:

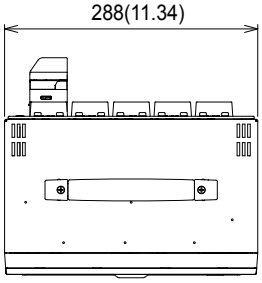

Unit: mm (approx. inch)
Unless otherwise specified, tolerance is ±3% (however, tolerance is ±0.3 mm when below 10 mm).

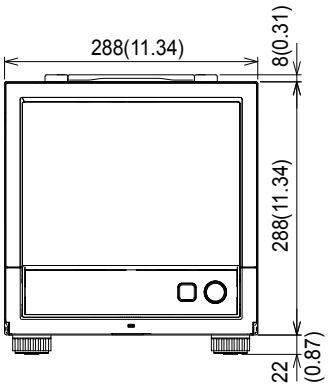

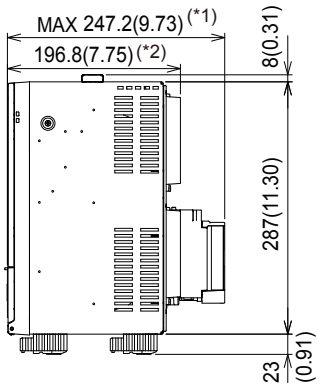

*1: with modules
*2: without moduels

Rear view

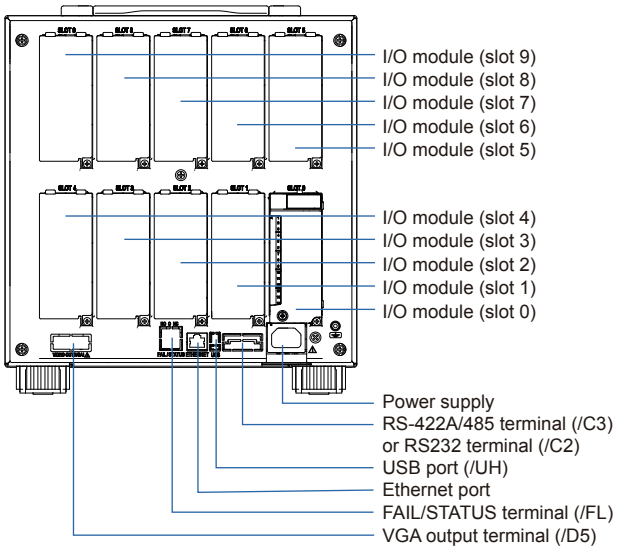

All Rights Reserved. Copyright © 2012-2014, Yokogawa Electric Corporation

■ SPECIFICATIONS OF OPTIONAL FUNCTIONS

ADVANCED SECURITY FUNCTION (/AS)

Security and electronic record/signature functions have been added that are compliant with the USA's FDA title 21 CFR Part 11.

- Enabling/disabling the advanced security function:
  You can enable or disable the advanced security function.
  * The set values and data stored in the internal memory are initialized each time the function is enabled or disabled.
- Data anti-tamper function:
  Settings and measured data are saved as encrypted binary files.
- Data type:
  Only for display or event
  Trigger mode is not possible with event data.
- Login function:
  Using the login function described below, you can enter security settings on the instrument
  - User name
  - Password
  - User ID (depend on setting)
  - User level and number of users:
    System administrator (all can be operated), General user (With user restrictions, you can set restrictions on performing operations and sign authority.), Monitor user (monitoring only), totally 100 users
  - User restrictions setting: 10 kinds (for general users)
- Password expiration time:
  select form Off, 1month, 3 month, 6month
- Password control function:
  Logins are verified by a Kerberos v5 authentication server* (only user name and password)
  Encryption method:
  AES128-CTS-HMAC-SHA1-96
  AES256-CTS-HMAC-SHA1-96
  ARCFOUR-HMAC-MD5
  Pre-Auth function: use
  * The function has confirmed compatibility with Windows Server2003 SP2/Windows Server2008 SP2/Windows Server2012 ActiveDirectory
- Signature function:
  After checking data that has finished being recorded, you can add three levels of electronic signature, select a pass/fail, and enter comments (50 characters maximum)
- Audit trail function:
  The operation log, the settings change log and the settings file when the change was made are saved.

SERIAL COMMUNICATION INTERFACE (/C2, /C3)

- Connection: EIA RS-232(/C2) or EIA RS-422/485(/C3)
- Protocol: Dedicated protocol or Modbus protocol
- Setting/measurement server function: Operation, setting or output of measurement data are available by dedicated protocol.
- Synchronization: Start-stop synchronization
- Transmission mode (RS-422/485):
  RS-422: Four-wire half-duplex multi-drop connection (1:n (n = 1 to 31))
  RS485: Two-wire half-duplex multi-drop connection (1:n (n = 1 to 31))
- Baud rate: 1200, 2400, 4800, 9600, 19200, 38400, 57600, or 115200 bps
- Data length 7 or 8 bits
- Start bit: 1 bit
- Stop bit: 1 bit or 2 bit
- Parity: ODD, EVEN, or NONE
- Handshaking Off: Off, XON: XON, XON: RS, and CS: RS
- Communication distance; RS-422/485: 1200 m, RS-232: 15 m
- Modbus/RTU communication: Reading or writing of measurement data on other instruments is available by Modbus protocol.
  Communication channel function option (/MC) is needed to read measurement data from other instruments.
- Operation modes: Master or slave
- Execution of a communication command using a bar code: The entered text can be executed as a communication command.

CUSTOM DISPLAY (/CG)

Using DXA170 DAQStudio, screen creation software, a custom screen can be constructed and displayed in which display components (such as trend, digital, and bar graphs) are freely placed. The screen data is transferred from DAQStudio to the internal memory via communication, or loaded from an external medium to the internal memory and displayed.

- Number of screens: 30 (internal memory)
- Display components:
  - Normal components (digital value, bar graph, tag No., tag comment, simple digital value, simple bar graph, alarm mark, unit, alarm indicator, lower-limit span value, upper-limit span value, group name, system icon, memory sample bar, date/time view, batch name, and user name)
  - Trend components (trend group display (with scale board))
  - List components (alarm list view and message list view)
  - Operation components (DO (DO operable), internal switch (internal switch operable), numeric value operations (viewing data of and writing data to communication channels), and button operations (writing numeric values, operating bits, switching screens, and executing communication commands)
  - Text components (labels)
  - Figure components (line view, rectangle view, and circle view)
  - Figure components (line view, rectangle view, and circle view)
- Configuring screens: Screen creation software Creation using DXA170 DAQStudio (GP does not have a creation function)
- Saving/loading screen data:
  A specified screen or all the screens is/are loaded from an external storage medium to the internal memory, or a specified screen or all the screens in the internal memory is/are saved on an external storage medium.

All Rights Reserved. Copyright © 2012-2014, Yokogawa Electric Corporation

VGA VIDEO OUTPUT (/D5) (Only for GP20)

- External display:
  Resolution: 800 × 600 dots (VGA)
  Connector: 15-pin D-Sub (female)

EtheNet/IP COMMUNICATION (/E1)

Can be joined to an Ethernet/IP network as an adapter (or a server).

- Loading data from the I/O channel or calculation channel (/MT)
- Loading and writing data from/to the communication channel (/MC)

WT COMMUNICATION (/E2)

Collects data by connecting to WT equipment manufactured by Yokogawa Meters & Instruments Corp. via Ethernet communication.

- Supported models: WT1800, WT500, and WT300
- Number of connectable units:
  GP10: 8
  GP20: 16
- Communication cycle: 500 ms/1 s/2 s/5 s/10 s/15 s/20 s/30 s
- Types of data that can be obtained: Voltage, current, power, power factor, phase, electrical energy, high-frequency wave, etc.
- Number of data allocations
  GX20/GP20：300
  GX10/GP10：50

FAIL OUTPUT (/FL)

- Contact: C contact, 1 point
- FAIL output:
  The relay contact output on the rear panel indicates the occurrence of CPU failure.
  Relay operation: Energized during normal operation and de-energized on CPU failure.
- Status output: The relay contact, which is de-energized in normal output state, is energized upon the occurrence of a memory/media error, measurement error, communication error, recording stop, or alarm.
- Rated power supply voltage: 24 V DC or 250 V AC or less
- Rated load current: 3A (DC)/3A (AC), resistance load
- Min. load current: 100 mA
- Recommended replacement periods of contact:
  Electrical: 30,000 more ON-OFF operations,
  Mechanical: 5,000,000 more ON-OFF operations

Log SCALE (/LG)

A logarithmic voltage that has been converted from a physical value is applied to the GP, and then the GP's Log scale (logarithmic scale) is used to display and record the physical value.

- Input type: Log input (logarithmic input), Pseudo log input: An input that supports pseudo logs, Log linear input: Input that is linear on a logarithmic scale.
- Range: 20mV/60mV/200mV/1V/2V/6V/20V/50V
- Scalable range:
  - Log input:
    1.00E-15 to 9.99E+15 (15decade maximum)
    Scale_L < Scale_U
    If the lower limit mantissa is 1.00, the difference between the exponents must be 1 or more.
    If the lower limit mantissa is a value other than 1.00, the difference between the exponents must be 2 or more.
  - Pseudo Log Input/Log linear input
    1.00E-15 to 9.99E+15 (15decade maximum)
    The higher limit mantissa is the same as the lower limit mantissa).
    If the lower limit mantissa is 1.00, the value must be between 1.00E–15 and 1.00E+15, the difference between the exponents must be 1 or more, and the maximum decades is 15.
    If the lower limit mantissa is a value other than 1.00, the value must be between 1.01E–15 and 9.99E+15, the difference between the exponents must be 1 or more and the maximum decades is 15.
- Alarm type: High limit, low limit, delay high limit, and delay low limit
- Alarm setting range: The range converted into the LOG scale corresponding to -5% to 105% of the span width.
- Alarm hysteresis: Fixed to 0
- Green band setting range: The lower limit to the upper limit of the scale. However, the lower limit of the display position must be smaller than the upper limit.
- Position of the decimal point: 1 to 2
- Misc: Nonlinear input is possible by correcting the input value

MATHEMATICAL FUNCTIONS WITH REPORT FUNCTION (/MT)

Mathematical Function:

- Number of math channels; GP10: 50, GP20: 100
- Operation:
  General arithmetic operations: Four arithmetic operations (+, -, *, /), square root, absolute, common logarithm, natural logarithm, exponential, and power
  Relational operations: <, ≤, >, ≥, =, and ≠
  Logic operations: AND, OR, NOT, and XOR
  Statistical operations: TLOG or CLOG
  Special operations: PRE, HOLD, RESET, and CARRY
  Conditional operation: [a?b:c]
  Bit operation: BIT
  Integer extracting operation: INT
  Remainder extracting operation: MOD
  Trigonometric functions: SIN, COS
- Computation accuracy: Double-precision floating point
- Data that can be used;
  Channel data: Measurement channels (GP10: 0001 to 6516, GP20: 0001 to 6516), mathematical channels (GP10: A001 to A050, GP20: A001 to A100), Communication channels (GP10 standard type: C001 to C300, GP20 large

All Rights Reserved. Copyright © 2012-2014, Yokogawa Electric Corporation

memory type: C001 to C500), Constants:100 (K001 to K100), Internal switch: 100 (S001 to S100), Flag: 20 (F01 to F20), Recording state (REC01)

Report function:

- Number of report channels; GP10: 50, GP20: 60
- Report types: Hourly + daily, daily + weekly, daily + monthly, Batch, Day custom
- Computation types: Average, maximum, minimum, sum, or instantaneous value
- Unit of sum: OFF, /s, /min, /hour, /day
- Report templates: Office Open XML spreadsheet files (which can be displayed with Microsoft Office Excel) or PDF files can be output or printed out with any LAN-connected printer supporting the HP-PCL5c language.

COMMUNICATION CHANNEL FUNCTIONS (/MC)

- Number of communication channels;
  GP10 standard type: 300 (C001 to C300)
  GP20 large memory type: 500 (C001 to C500)

  * Required to record data from EtherNet/IP (/E1), Modbus devices or PCs on the GP.

USB INTERFACE (/UH)

- USB port: Complies with USB 2.0 and host function
- Number of ports: 2 (one each on the front panel and rear panel)
- Connectable devices: Only connect the devices listed below to prevent damage to the devices.
  - Keyboard: Complies with HID Class Ver. 1.1
    - 104/89 keyboard (US) and 109/89 keyboard (Japanese)
  - Mouse: Complies with HID Class Ver. 1.1
  - External medium: USB flash memory
    - Does not guarantee the operation of all USB flash memories
    - External medium such as a hard disk, ZIP, MO, and optical discs are not supported.
  - Barcode reader: USB HID Class Ver. 1.1 compatible
    - English (U.S.) standard USB keyboard compatible
- Execution of a communication command using a bar code: The entered text can be executed as a communication command.
- Power supply: 5 V ±10%, 500 mA *1

  *1: Devices which need more than 500 mA total bus power for 2 ports cannot be connected at the same time.
  For low powered devices (bus power < 100 mA): 5V ± 5%
  For high powered devices (bus power < 500 mA): 5V ± 10%

All Rights Reserved. Copyright © 2012-2014, Yokogawa Electric Corporation

■ INPUT/OUTPUT MODULE SPECIFICATIONS

ANALOG INPUT MODULE (Model GX90XA or Option /Uxx0)

DIGITAL INPUT MODULE (Model GX90XD or Options /CRx1)

DIGITAL OUTPUT MODULE (Model GX90YD, or Options /CR1x, /CR2x, /CR4x)

Please see GX90XA/GX90XD/GX90YD/GX90WD Input/Output Module General Specification (GS 04L53B01-01EN.)

■ APPLICATION SOFTWARE

SMARTDAC+ STANDARD
- Universal viewer
- Web application/Hardware configurator

Download the latest version of the software from the following URL;
www.smartdacplus.com/software/en/

Operating environment

OS:

OS	Type
Windows Vista	Home Premium SP2 (Except for 64-bits Editions)
	Business SP2 (Except for 64-bits Editions)
Windows 7	Home Premium SP1 (32-bit and 64-bit Editions)
	Professional SP1 (32-bit and 64-bit Editions)
Windows 8.1	Pro

Processor and main memory:

OS	Processor and main memory
Windows Vista	Intel Pentium 4, 3GHz or faster x64 or x86, 2GB or more
Windows 7 Windows 8.1	32-bit edition Intel Pentium 4, 3GHz or faster x64 or x86, 2GB or more 64-bit edition Intel x64 processor that is equivalent to Intel Pentium 4, 3 GHz or faster, 2GB or more

Browser:

Browser	Version
Windows Internet Explorer Java Runtime Environment 1.7.0 xx (Version 7 Update xx) xx is more than 51	Internet Explorer 8, Internet Explorer 9, Internet Explorer 10, or Internet Explorer 11

Hard disk:
- 100MB or more of free space

Display:
- A video card that is recommended for the OS and a display that is supported by the OS, has a resolution of 1024 x 768 or higher, and that can show 65,536 colors (16-bit, high color) or more.

Universal Viewer software

The universal viewer can display the following data generated by the recorder on the screen and print it out on the printer.
- Display data file
- Event data file
- Report data file (Including Hour, Day, Week Month)
- Manual sample data file

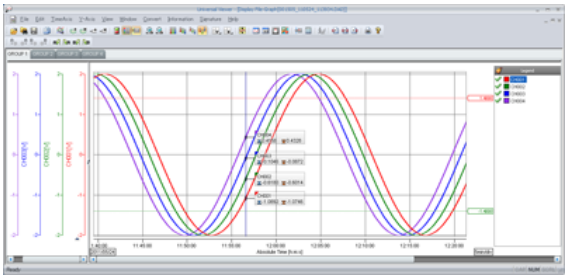

- Viewer function
  Waveform display, digital display, circular display, list display, report display, operation log display etc.
- Data conversion:
  File conversion to ASCII or MS-Excel format

Web application/Hardware configurator

- Online setting on Web browser (IE)
- Offline setting on Web browser (IE)

Both settings can be made using browsers such as Internet Explorer 8, 9, 10 and 11.

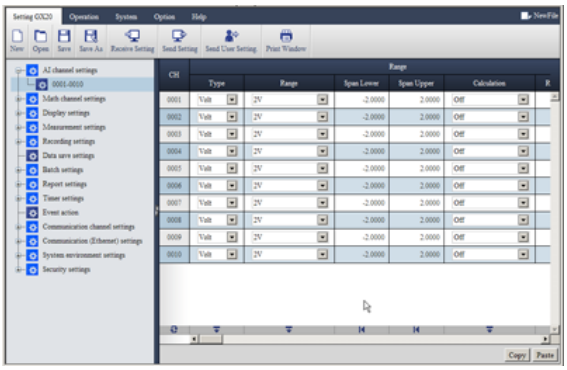

All Rights Reserved. Copyright © 2012-2014, Yokogawa Electric Corporation

■ MODEL AND SUFFIX CODES

Model	Suffix Code				Optional code	Description
GP10						Paperless recorder (Portable type, Small display) *13
GP20						Paperless recorder (Portable type, Large display) *13
Type	**-1**					Standard (Max. measurement channels: 100 ch)
	-2					Large memory (Max. measurement channels: 500 ch) *12
Display language		**E**				English, degF, DST (summer/winter time) *9
Power supply			**1**			100 V AC, 240 V AC
Power cord				**D**		Power cord UL/CSA standard
				F		Power cord VDE standard
				R		Power cord AS standard
				Q		Power cord BS standard
				H		Power cord GB standard
				N		Power cord NBR standard
Optional features					**/AS**	Advanced security function (Part 11)
					/C2	RS-232 *1
					/C3	RS-422/485 *1
					/CG	Custom display *15
					/D5	VGA output *2
					/E1	EtherNet/IP communication
					/E2	WT communication *14
					/FL	Fail output, 1 point
					/LG	Log scale
					/MT	Mathematical function (with report function)
					/MC	Communication channel function
					/UH	USB interface (Host 2 ports)

Analog input module, Digital I/O module:

Please add the following suffix codes to the main unit model and specification codes.

Option	Optional code	Description
Optional features (Analog input) *3*11	**/UC10**	With analog input module, 10ch (Clamp terminal)
	/UC20	With analog input module, 20ch (Clamp terminal) *7
	/UC30	With analog input module, 30ch (Clamp terminal) *8
	/UC40	With analog input module, 40ch (Clamp terminal) *5
	/UC50	With analog input module, 50ch (Clamp terminal) *5
	/US10	With analog input module, 10ch (M3 screw terminal)
	/US20	With analog input module, 20ch (M3 screw terminal) *7
	/US30	With analog input module, 30ch (M3 screw terminal) *8
	/US40	With analog input module, 40ch (M3 screw terminal) *5
	/US50	With analog input module, 50ch (M3 screw terminal) *5
Optional features (Digital I/O) *4	**/CR01**	With digital I/O module, (Output:0, Input:16) *8 *9
	/CR10	With digital I/O module, (Output:6, Input:0) *8 *9
	/CR11	With digital I/O module, (Output:6, Input:16) *7 *8 *9
	/CR20	With digital I/O module, (Output:12, Input:0) *6 *9
	/CR21	With digital I/O module, (Output:12, Input:16) *6 *9
	/CR40	With digital I/O module, (Output:24, Input:0) *6 *9
	/CR41	With digital I/O module, (Output:24, Input:16) *6 *9

*1 /C2 and /C3 cannot be specified together.
*2 /D5 can be specified only for the GP20.
*3 Only one option can be specified.

All Rights Reserved. Copyright © 2012-2014, Yokogawa Electric Corporation

*4 Only one option can be specified.
*5 /UC40, /UC50, /US40 and /US50 cannot be specified for the GP10.
*6 /CR20, /CR21, /CR40 and /CR41 cannot be specified for the GP10.
*7 If /UC20 or /US20 is specified, /CR11 cannot be specified for the GP10.
*8 If /UC30 or /US30 is specified, /CR01, /CR10 and /CR11 cannot be specified for the GP10.
*9 Digital input module and digital output module have M3 screw terminals.
*10 The Display language is selectable from English, German, French, Russian, Korean, Chinese, Japanese. (As of Mar., 2013)
To confirm the current available languages, please visit the following website.
URL: http://www.yokogawa.com/ns/language/
*11 Solid state relay scanner type (Type Suffix Code: -U2). If you need the electromagnetic relay scanner type, purchase it separately.
*12 Large memory type can be specified only for the GP20.
*13 To connect an expandable I/O, you will need one expansion module for the GP.
*14 /MC must be separately specified when the WT communication is selected.
*15 Creating custom displays requires DXA170 DAQStudio (sold separately). (GP does not have a creation function.)

Analog input module, Digital I/O module (sold separately):

MODEL and SUFFIX Code (GX90XA)

MODEL and SUFFIX Code (GX90XD)

MODEL and SUFFIX Code (GX90YD)

MODEL and SUFFIX Code (GX90WD)

Please see GX90XA/GX90XD/GX90YD/GX90WD Input/Output Module General Specification (GS 04L53B01-01EN.)

When connecting the Expandable I/O

Please see GX60 Expandable I/O, GX90EX Expansion Module General Specification (GS 04L53B00-01EN.)

■ Standard Accessories

Product	Qty
SD memory card (1GB)	1
Stylus pen (touch pen)	1
Tag sheet (for GP10 or GP20)	1
Sheet (paper) (for GP10 or GP20)	1
Power cord	1

■ Application Software (Sold Separately)

Model	Description	OS
DXA170	DAQStudio software	Windows Vista/7/8/8.1
GA10	Data Logging Software	Windows Vista/7/8.1 Windows Server 2008/2012

■ Optional Accessories (Sold Separately)

Product	Model/part no.
Model SD memory card (1GB)	773001
Stylus pen (touch pen)	B8740BZ
Shunt resister for M3 terminal (10 Ω ± 0.1 %)	X010-010-3
Shunt resister for M3 terminal (100 Ω ± 0.1 %)	X010-100-3
Shunt resister for M3 terminal (250 Ω ± 0.1 %)	X010-250-3
Shunt resister for Clamp terminal (10 Ω ± 0.1 %)	438922
Shunt resister for Clamp terminal (100 Ω ± 0.1 %)	438921
Shunt resister for Clamp terminal (250 Ω ± 0.1 %)	438920
Validation Documents (For /AS option)*1	773230

*1 Provision of Validation Documents
A license sheet containing the license key required for installation is provided.
Download the validation document from the following URL.
http://www.smartdacplus.com/software/en/

All Rights Reserved. Copyright © 2012-2014, Yokogawa Electric Corporation

Calibration certificate (sold separately)
When ordering the GP10/GP20 with options (analog input), the calibration certificate for the modules is included in and shipped with the calibration certificate of the main unit. When ordering an analog input module separately, each module gets its own calibration certificate (one certificate per module).

Test certificate (QIC, sold separately)
When ordering the GP10/GP20 with options (analog/digial I/O), the QIC for each module is included in and shipped with the QIC of the main unit. When ordering analog input modules and digital I/O modules separately, each module gets its own QIC (one QIC per module).

User's Manual
Product user's manuals can be downloaded or viewed at the following URL. To view the user's manual, you need to use Adobe Reader 7 or later by Adobe Systems.

URL: www.smartdacplus.com/manual/en/

Product Purchase Specifications
The GP10/GP20 is composed of the main unit, I/O modules, Expandable I/O, and Expansion module.

There are two ways to purchase I/O modules.

One way is to purchase them individually by specifying models GX90XA, GX90XD, and GX90YD.

The other way is to purchase them as an option (/UCxx or /USxx). Purchasing them as an option is convenient, but this places limitations on the number of analog inputs that you can obtain.

If you want to use more than 50 channels, please purchase the I/O modules individually.

To connect expandable I/O (GX60) to GP10 or GP20, you must purchase one unit of expansion module (GX90EX) for GP10/GP20 in addition to the expandable I/O.

Trademarks
The TCP/IP software used in this product and the document for that TCP/IP software are based in part on BSD networking software, Release 1 licensed from The Regents of the University of California.

- SMARTDAC+ is a trademark of Yokogawa Electric Corporation.
- Microsoft, MS and Windows are registered trademarks of Microsoft Corporation USA.
- Pentium are registered trademarks of Intel Corporation.
- Ethernet is a registered trademark of XEROX Corporation.
- Modbus is a registered trademark of AEG Schneider.
- Kerberos is a trademark of MIT.
- Java and Java-related trademarks are trademarks or registered trademarks of Sun Microsystems, Inc. in the United States and/or other countries.
- Other company and/or product names are registered trade mark of their manufactures.

All Rights Reserved. Copyright © 2012-2014, Yokogawa Electric Corporation