General Specifications

GS 04L55B01-01EN

Data Acquisition System GM

GM10 Data Acquisition Module
GM90MB Module Base
GM90PS Power Supply Module

[Release 5]

■ OVERVIEW

The Data Acquisition System GM is a data logger that excels in versatility and expandability. The main unit includes on-board memory for data acquisition and also supports SD cards for external storage. The system consists of a Data Acquisition Module (GM10), Power Supply Module (GM90PS), and Module Base (GM90MB), which is used to mount a variety of modules.
SMARTDAC+ GM utilizes the same modules as the GX/GP series of SMARTDAC+.

GM10

GM90MB

GM90PS

- **High expandability and maintainability**: Employs **YOKOGAWA's original block structure**, making it easy to rearrange the combination of required modules. The structure also excels in maintainability because even after installation, every module can be removed separately.
- **Multichannel measurement**: Measures up to 420 analog input channels on the GM10-2 and up to 100 channels even on the GM10-1.
- **Flexible system configuration**: A wide variety of systems, such as multichannel measurement from 10 to 420 channels or data acquisition through communication, can be configured.
- **High environmental tolerance**: The guaranteed operating temperature range of -20°C to 60°C allows more freedom in where the system can be installed.
- **Mounting**: Not only can the system be installed on a desktop, it can also be mounted on DIN rails or a wall.
- **Less wiring through distribution**: Installation of sub units away from the main unit makes measurement possible without connecting sensor signal wires over a long distance.
- **Long-term recording and saving**: Large internal memory (500 MB on the GM10-1 and 1.2 GB on the GM10-2) allows long-term recording and saving.
- **Secure saving of recording data**: An SD card (SD/SDHC) up to 32 GB (1 GB included) can be used for the external storage medium. And the FTP client function can be used to provide data redundancy using a file server.
- **Rich I/O interface**: Seven types of I/O modules are available: analog input, analog output, digital input, digital output, digital I/O, pulse input and PID control. DCV (DC voltage), TC (thermocouple), RTD (resistance temperature detector), DI (contact or TTL level voltage), mA (DC current) can be assigned to each channel as input signals.
- **Web server function**: Various settings can be configured online from a Web browser, without using a dedicated software application. Moreover, measured data can be monitored in real time.
- **High withstand voltage performance**: Safe measurement up to withstand voltage of 600 V between input terminal and ground is possible by using a high withstand voltage analog input module.
- **High-speed measurement**: Measurement at the shortest interval of 1 ms is possible by using a high-speed analog input module.
- **Dual interval measurement**: Measurement can be performed by setting two different scan intervals.
- **Equipment/Quality Easy Predictive Detection Health monitor function:** This function judges quality based on a predictive detection model. You can check health scores that indicate degrees of normality and abnormality. Create predictive detection models with the Equipment/Quality Predictive Detection Tool (sold separately, in the cloud or offline) based on historical measurement data.

  For more details, please see the Equipment/Quality Predictive Detection Tool General Specifications (GS 04L66B01-01EN).

  Profile function: This function alerts you to deviations from the profile trend (upper and lower range of measured values). You can also check deviations from a reference waveform on screen. Create profile trends with the Equipment/Quality Predictive Detection Tool (sold separately, in the cloud or offline) based on historical measurement data.

  For more details, please see the Equipment/Quality Predictive Detection Tool General Specifications (GS 04L66B01-01EN).

  Note Judgments from equipment/quality easy predictive detection are for reference only. Performance, accuracy, and other properties are not guaranteed.
- **Simple settings**: The standard USB port makes it easy to connect with the PC.
- **Supports 21 CFR Part 11**: GM supports the USA FDA's Title 21 CFR Part 11 regulation by advanced security function (/ AS optional).

The contents of this general specifications correspond to the GM with release number 5 and style number 2.
Release number: firmware ID number (GM10)
Style number: hardware ID number (GM90PS)

YOKOGAWA
Yokogawa Electric Corporation
2-9-32, Nakacho, Musashino-shi, Tokyo, 180-8750 Japan
GS 04L55B01-01EN
©Copyright October 2014
25th Edition Sep. 12, 2025

- **PID control function**: PID control on up to 20 loops is possible by installing a PID control module.
- **Program control function (/PG option)**: Program control of up to 99 patterns is possible by using a PID control module and program control function. In addition, up to 32 time event and 32 PV events can be used.

* For details on the PID control module, PID control function, and program control function (/PG), see the GX90UTPID Control Module General Specifications (GS04L53B01-31EN).

- **Math function (/MT option)**: Enables a variety of calculations from basic math to functions (such as square root, logarithm, F-value, and elapsed time). The report function enables creation of hourly, daily, and monthly reports and other types of data.
  Logic math outputs results of computation as 0s or 1s to internal switches and DO channels.
  Elapsed time calculation allows you to measure the amount of time elapsed after a condition is met.
  The measured time can be recorded through math channels.
- **Extensive network functions**: The standard Ethernet interface allows network features such as various e-mail notifications and FTP file transfer. In addition, Modbus/TCP, Modbus/RTU (/C3), EtherNet/IP (/E1), and CC-Link familty SLMP communication (/E4) are supported.
- **PROFINET communication function**: PROFINET communication is available by connecting the GX90NW network module.

* For details on the network module and PROFINET communication, see the GX90NW network module general specifications (GS 04L53B51-01EN).

- **Universal Viewer software**: A free software application is available for displaying and printing waveforms of measured data on a PC.
- **Actual values underlying accurate measurements**

Input Type		Measuring accuracy*1 (typical value*2)
DCV	20 mV	± (0.01% of rdg +5 μV)
	60 mV	± (0.01% of rdg +5 μV)
	6V (1-5V)	± (0.01% of rdg +2 mV)
TC*3	R, S	±1.1°C
	B	±1.5°C
	K (-200.0 to 1370.0°C)	± (0.01% of rdg +0.2°C for 0.0 to 1370.0°C; ± (0.15% of rdg +0.2°C) for -200.0 to 0.0°C
	K (-200.0 to 500.0°C)	±0.2°C for 0.0 to 500.0°C; ± (0.15% of rdg +0.2°C) for -200.0 to 0.0°C
	J	± 0.2°C for 0.0 to 1100.0 °C; ± (0.10% of rdg + 0.2 °C) for -200.0 to 0.0 °C
	T	± 0.2°C for 0.0 to 400.0°C; ± (0.10% of rdg + 0.2 °C) for -200.0 to 0.0 °C
	N	± (0.01% of rdg + 0.2°C) for 0.0 to 1300.0 °C; ± (0.22% of rdg + 0.2°C) for -200.0 to 0.0 °C
RTD	Pt100 (-200.0 to 850.0°C)	± (0.02% of rdg + 0.2°C)
	Pt100 (high resolution) (-150.00 to 150.00°C)	± (0.02% of rdg + 0.16°C)

rdg: Reading value

*1 These values have been calculated from the accuracy testing data at the time of shipment of the instrument from the factory.
Applies to GX90XA-10-U2, A/D integration time 16.67 ms or more, General operating conditions: 23±2 ºC, 55±10% RH, supply voltage 90–132, 180–264 V AC, power frequency within 50/60 Hz ±1%, warm-up of 30 minutes or more, no vibrations or other hindrances to performance.

*2 For the measuring accuracy (guaranteed), see the module's general specifications (GS 04L53B01-01EN).

*3 These values do not include the reference junction compensation accuracy.

■ CONFIGURATION

SMARTDAC+ GM handles a wide variety of applications through the combination of various modules.

The unit that includes GM10 (Data Acquisition Module) is called the *main unit*. A unit connected to the main unit via GX90EX (expansion module) is called a *sub unit*. Modules in a unit can be connected by installing a GM90MB (Module Base).

● Unit Types

Main Unit (Single Unit)

A unit consisting of a GM10 and a GM90PS. Up to 10 I/O modules* can be connected to a unit.

* Up to 8 when a GX90XA-T1 is connected

Main Unit (Multi Unit)

A unit consisting of a GM10, a GM90PS and a GX90EX. Up to six I/O modules can be connected to a unit. Up to six sub units can be connected via the GX90EX.

Sub Unit

A unit consisting of a GM90PS and a GX90EX. Up to six* I/O modules can be connected to a unit. The main unit and sub units are connected directly using LAN cables. The maximum connection distance between two units is 100 m. It can also be used as an expandable I/O for the GX/GP paperless recorder.

* See "Restrictions and Cautions" on page 27.

All Rights Reserved. Copyright © 2014, Yokogawa Electric Corporation

● Module Types

Model	Description
GM10	Data Acquisition Module for SMARTDAC+ GM
	A module that acquires data from I/O modules and expansion modules. A main unit requires one module of this type.
GM90PS	Power Supply Module for SMARTDAC+ GM
	A module that supplies power to the modules connected in the unit. A unit requires one module of this type.
GX90EX*	Expansion Module
	A module that connects units to expand the system. A main unit or a sub unit requires one module of this type.
GX90NW	Network Module
	For communication using industrial network communication protocols. You can connect one network module to one main unit.
GM90MB	Module Base
	This is used to connect modules (excluding the GM90PS).

* The firmware version of GX90EX that can be used on the SMARTDAC+ GM must be R1.02.01 or later.

For the detailed specifications of the expansion module, see the following general specifications.

Material No.: GS 04L53B00-01EN

For the detailed specifications of the network module, see the following general specifications.

Material No.: GS 04L53B51-01EN

I/O Modules

Input/output modules may need to have their firmware updated.

Model		Description
GX90XA		Analog input module (number of inputs: 10)
		A module that can receive various analog signals.
Type	Suffix code	
	-U2	Universal, solid state relay scanner type (3-wire RTD b-terminal common)
		DC voltage, standard signal, thermocouple, resistance temperature detector (RTD), DI (voltage, contact), DC current (when an external shunt resistor is connected)
		Scan interval: 100/200/500 ms, 1/2/5 s
		Power consumption: 0.7 W
	-C1	Current (mA), scanner type (isolation between channels)
		DC current (0-20 mA), DC current standard signal (4-20 mA)
		Scan interval: 100/200/500 ms, 1/2/5 s
		Power consumption: 0.7 W
	-L1	Low withstand voltage DCV/TC/DI, scanner type (isolation between channels)
		DC voltage, standard signal, thermocouple, DI (voltage, contact), DC current (when an external shunt resistor is connected)
		Scan interval: 500 ms, 1/2/5 s
		Power consumption: 0.7 W

Continued on the following table

Model		Description
	-T1	DCV/TC/DI, electromagnetic relay scanner type (isolation between channels)
		DC voltage, standard signal, thermocouple, DI (voltage, contact), DC current (when an external shunt resistor is connected)
		Scan interval: 1/2/5 s
		Power consumption: 0.9 W
	-H0	High-speed universal, individual A/D (isolation between channels) (number of inputs: 4)
		DC voltage, standard signal, thermocouple, resistance temperature detector (RTD), DI (voltage, contact), DC current (when an external shunt resistor is connected)
		Scan interval: 1/2/5/10/20/50/100/200/500 ms, 1/2/5 s
		Power consumption: 2.0 W
	-R1	4-wire RTD/resistance, solid state relay scanner type (number of inputs: 6)
		4-wire RTD, 4-wire resistance
		Scan interval: 100/200/500 ms, 1/2/5 s
		Power consumption: 0.7 W
	-V1	DCV/TC/DI, high withstand voltage scanner type (Isolated between channels)
		DC voltage, standard signal, thermocouple, DI (voltage, contact), DC current (when an external shunt resistor is connected)
		Scan interval: 100/200/500 ms, 1/2/5 s
		Power consumption: 1.0 W
GX90XD		Digital input module (number of inputs: 16)
		A module that can receive open collector or voltage-free contact signals.
		Scan interval: 100/200/500 ms, 1/2/5 s
		Power consumption: 0.7 W
GX90YA		Analog output module (number of outputs: 4)
		A module that can transmit 4 to 20 mA DC or 0 to 20 mA DC signals.
		Output update interval: 100/200/500 ms, 1/2/5 s
		Power consumption: 3.0 W
GX90YD		Digital output module (number of outputs: 6)
		A module that can transmit relay contact (c contact) signals.
		Scan interval: 100/200/500 ms, 1/2/5 s
		Power consumption: 1.4 W
GX90WD		Digital I/O module (number of inputs: 8, number of outputs: 6)
		A module that can receive open collector or voltage-free contact signals and transmit relay contact (c contact) signals.
		Scan interval: 100/200/500 ms, 1/2/5 s
		Power consumption: 1.6 W
GX90XP		Pulse input module (number of inputs: 10)
		A module that can receive open collector, voltage-free contact, or 5 V logic signals.
		Scan interval: 100/200/500 ms, 1/2/5 s
		Power consumption: 0.9 W
GX90UT		PID control module (Number of inputs / outputs: universal input 2, current pulse or voltage pulse output 2, DI 8, DO 8)
		This module can perform PID control on up to 2 loops. It supports the following control modes: single loop, cascade, and loop control with PV switching.
		Control interval: 100/200 ms
		Power consumption: 2.8 W

All Rights Reserved. Copyright © 2014, Yokogawa Electric Corporation

For the detailed specifications of the I/O modules, see the following general specifications.

Material No.: GS 04L53B01-01EN

For the detailed specifications of the PID control module, see the following general specifications.

Material No.: GS 04L53B01-31EN

● System Configuration

SMARTDAC+ GM supports both standalone operation and data acquisition using a PC.

Restrictions on module connection

* See “Restrictions and Cautions” on page 27.

Single Unit System

A system configured with only a main unit.

Use as a stand-alone type

Use by connecting a PC

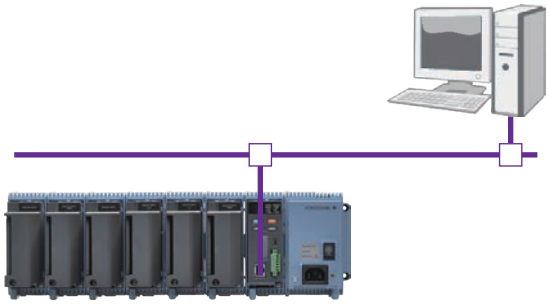

Multi Unit System

A system configured with a main unit connected to sub units*.

* The GX60 expandable I/O can also be used.

Note: The main unit and sub units are connected directly using LAN cables. Hubs and repeaters cannot be used.

- Up to six sub units can be connected to a main unit. Each unit can connect up to six modules.
- For analog input, up to 420 channels (GM10-2) and up to 100 channels (GM10-1) can be measured.

Use as a stand-alone type

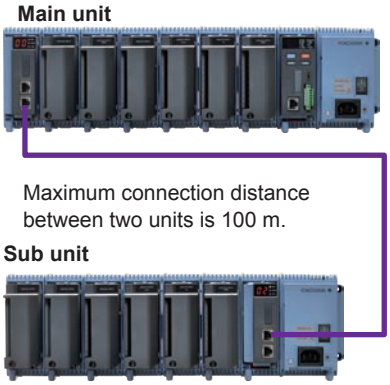

Use by connecting a PC

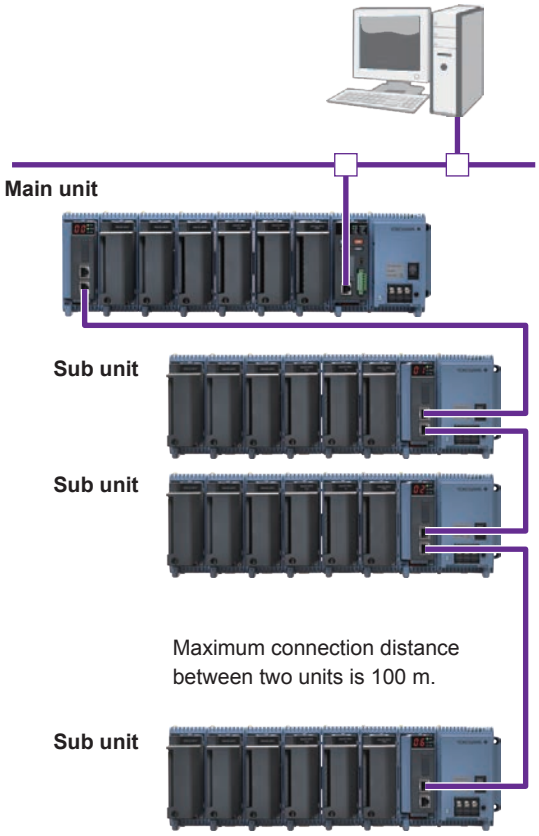

All Rights Reserved. Copyright © 2014, Yokogawa Electric Corporation

■ SMARTDAC+ GM COMMON SPECIFICATIONS

● Compliant Standards

- CSA: CSA C22.2 No. 61010-1, CSA-C22.2 No. 61010-2-030, CAN/CSA-C22.2 No. 61010-2-201*4, Overvoltage Category II or I *1, Pollution Degree 2*2, Measurement Category*3
- UL: UL 61010-1, UL Std. No. 61010-2-030, UL 61010-2-201*4 (CSA NRTL/C), Overvoltage Category II or I *1, Pollution Degree 2*2, Measurement Category*3
- CE, UKCA/EMC directives: EN 61326-1 Class A Table 2 (For use in industrial locations) compliant
  EN 61000-3-2 compliant
  EN IEC 61000-3-2 compliant
  EN 61000-3-3 compliant
- CE, UKCA/Low voltage directive: EN 61010-1, EN IEC 61010-2-030, EN IEC 61010-2-201*4 compliant
  Overvoltage Category II or I *1, Pollution Degree 2*2, Measurement Category*3
- CE, UKCA/EU RoHS directive: EN IEC 63000
- WEEE directive: Compliant
- Australia, New Zealand EMC standard (RCM): EN 61326-1 Class A Table 2 (For use in industrial locations) compliant
- KC mark: KS C9811, KS C9610-6-2 compliant

/C8 option

- CSA: CSA C22.2 No. 61010-1, CSA-C22.2 No. 61010-2-030, CAN/CSA-C22.2 No. 61010-2-201*4, Overvoltage Category II or I *1, Pollution Degree 2*2, Measurement Category*3
- UL: UL 61010-1, UL Std. No. 61010-2-030, UL 61010-2-201*4 (CSA NRTL/C), Overvoltage Category II or I *1, Pollution Degree 2 *2, Measurement Category *3
- WEEE directive: Compliant
- CE and UKCA are not supported.
- Wireless module certification and the like: FCC Approval, IC Approval, Japanese Radio Law
  Korea Certification (Radio Wave Act), China Certification (Radio Wave Act)
- Wireless communication standards of Australia and New Zealand (RCM): EN 61326-1 Class A Table 2 (For use in industrial locations) compliant
  AS/NZS 4268 compliant, AS/NZS 2772.2 compliant
- KC mark: KS C9811, KS C9610-6-2 compliant

*1 Overvoltage Category: Describes a number which defines a transient overvoltage condition. Implies the regulation for impulse withstand voltage. Applies to electrical equipment which is supplied from the fixed installation like a distribution board.
II: Applied to power supply voltage code 1 (100-240 V AC)
I: Applied to power supply voltage code 2 (12-28 V DC)

*2 Pollution Degree 2: Describes the degree to which a solid, liquid, or gas which deteriorates dielectric strength or surface resistivity is adhering. “2” applies to normal indoor atmosphere. Normally, only non-conductive pollution occurs.

*3 Measurement Category: Depends on the specification of each modules

Category	Measurement category	Description	Remarks
II	CAT II	Available in the testing and measuring circuits directly connected to a usage location (receptacle or the like) of a low-voltage main power supply facility.	Appliances, portable equipment, etc.
III	CAT III	Available in the testing and measuring circuits connected to a power distribution portion of a low-voltage main power supply facility.	Distribution board, circuit breaker, etc.
IV	CAT IV	Available in the testing and measuring circuits connected to a power source of a low-voltage main power supply facility.	Overhead wire, cable systems, etc.

*4 This product is designed as open equipment under the relevant standard, install it as follows:
- Install the GM unit / GX60 in a panel with a door.
- The instrumentation panel or panel used for support must comply with CSA/UL/EN/IEC 61010-2-201 or must be at least IP1X (degrees of protection) and at least IK09.

- The /WH option does not support standards other than KC mark.

All Rights Reserved. Copyright © 2014, Yokogawa Electric Corporation

● Normal Operating Conditions

- Rated supply voltage:
  100 to 240 V AC (AC power supply) or
  12 to 28 V DC (DC power supply)
- Allowable supply voltage:
  90 to 264 V AC (AC power supply) or
  10 to 32 V DC (DC power supply)
- Power frequency (AC power supply):
  50 Hz ±2 %, 60 Hz ±2 %
- Power consumption:

Supply voltage	Normal operation*	Maximum
100 V AC	25 VA	45 VA
240 V AC	35 VA	60 VA
12 V DC	15 VA	24 VA
28 V DC		

* When 10 analog input modules are connected

- Ambient temperature: −20 to 60 °C
  −20 to 50 °C in the following cases
  - When a GX90YD is used
  - When a GX90WD is used
  - When a GX90XA-T1 (electromagnetic relay type) is used
  - When a GX90YA is used
  - When a GX90UT is used
  - On a GM10 with the /C8 option
- Ambient humidity: 20 to 85 %RH (no condensation)
- Magnetic field: 400 A/m or less (DC and 50/60 Hz)
- Vibration: 5 ≤ f < 8.4 Hz amplitude 3.5 mm (peak)
  8.4 ≤ f ≤ 160 Hz acceleration 9.8 m/s2 or less
- Shock: Power supply ON, 98 m/s^2 or less, 11 ms (excluding GX90YD and GX90WD)
  Power supply OFF, 500 m/s^2 or less, approx. 10 ms
  6 directions (±X, ±Y, ±Z), 3 times in each direction
- Mounting position: Left and right horizontal, front and back horizontal
- Altitude: 2000 m or less
- Installation location: Indoors
- Warm-up time: At least 30 minutes after power on

● Transport and Storage Conditions

- Ambient temperature: −25 to 70 °C
- Ambient humidity: 5 to 95 %RH (no condensation)
- Vibration: 10 to 60 Hz, 4.9 m/s^2 maximum
- Shock: 392 m/s^2 maximum (in packaged condition)

● Construction

Mounting: Wall mount, DIN rail (panel storage, rack), desktop
Note: No stacking
Material: Polycarbonate

■ GM10 DATA ACQUISITION MODULE SPECIFICATIONS

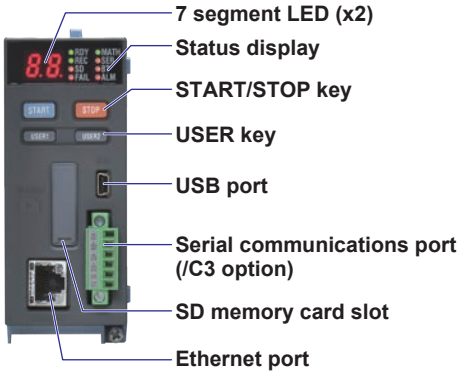

7 segment LED: Displays the operation mode, system No., self-check operation, key lock, operation error, process running, and module installation information.
Status display:

Item	LED color	Description
RDY	Green	System normal indication
REC	Green	Recording status
SD	Orange	SD card access status
FAIL	Red	System error indication
MATH	Green	Computation status
SER	Orange	Serial communication status
BT	Orange	Bluetooth communication status
ALM	Red	Alarm status

START key: Starts recording and computation
STOP key: Stops recording and computation, clears errors
USER keys (USER1/USER2):
Executes specified actions (event action function)

● Functional Specifications

Measuring Function

Number of connectable modules and number of I/O channels:

GM10-1

Modules	I/O channels
Up to 10	Up to 100

GM10-2

Modules	I/O channels
Up to 42	Up to 500 (up to 420 if AI only)

- Measurement mode:
  Normal, High speed, Dual interval

Normal: A mode in which the shortest measurement interval is 100 ms
Number of scan groups: 1
File type: Event data, display data
Data format: Binary, text
Scan interval: Fastest 100 ms
Compatible modules: All modules

High speed: A mode in which the shortest measurement interval is 1 ms
Number of scan groups: 1
File type: Event data only
Data format: Binary only
Scan interval: Fastest 1 ms

All Rights Reserved. Copyright © 2014, Yokogawa Electric Corporation

Compatible modules:*
High-speed AI (GX90XA-4-H0)

* A single DI (GX90XD) or DIO (GX90WD) can be connected for remote input. Measurement and recording are not possible.

Dual interval: A mode in which measurement is possible by setting different scan intervals on the two scan groups.
Number of scan groups: 2
File type: Event data only
Data format: Binary only
Scan interval:

Model	Scan group 1	Scan group 2
GM10-1	Fastest 5 ms	Fastest 100 ms
GM10-2	Fastest 1 ms	Fastest 100 ms

Master scan interval:
Scan group 1 or scan group 2
Master scan interval is used for the following: Math function's scan interval, communication channel function's scan interval, manual sampling function's detection timing, logic math interval, elapsed time calculation interval, instantaneous values included in e-mails
Compatible modules: Modules other than the PID control module

- Scan interval: 1 ms / 2 ms / 5 ms / 10 ms / 20 ms / 50 ms / 100 ms / 200 ms / 500 ms / 1 s / 2 s / 5 s

Note: Some intervals will be unavailable depending on the system configuration and modules.

- Scan intervals shorter than 1 s cannot be specified on electromagnetic relay type (type suffix code -T1) analog input modules.
- Scan intervals shorter than 500 ms cannot be specified on low withstand voltage relay type (type suffix code -L1) analog input modules.
- Scan interval shorter than 100 ms can only be specified when the measurement mode is set to High speed or Dual interval.

Module connection limitations:
See "Restrictions and Cautions" on page 27.

Channel Specifications

Operations such as measurement, computation, and recording are performed on channels.

- Channel name: A channel name is expressed with a 4-digit number. Channel names are specific to the system, so they cannot be changed. By setting tags or tag numbers to the channels, you can use any names you like.

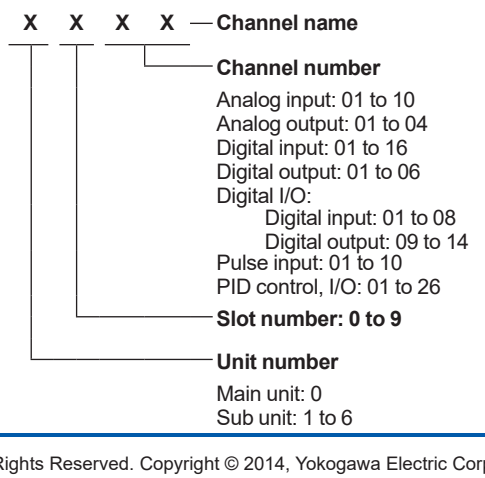

Display Function

Real-time data monitoring is possible using a Web browser.

- Number of groups: GM10-1: 50, GM10-2: 60
- Number of channels that can be assigned to each group: 20
- Display types: Trend, digital, bar graph, horizontal bar graph, overview, alarm summary, message summary, DO channel status, internal switch status, Modbus master status, Modbus client status, WT client status, SLMP client status, memory data list, report data list, manual sampled data list, various error logs, network information, system information, control (when PID control module is installed), elapsed time

Display update interval: Minimum 1 second

Data Saving Function

Data is recorded to internal memory and external storage medium. When the system recovers from a power failure, the operation that was being performed before the power failure is resumed.

- Internal memory: Temporarily saves various types of data.
  Medium: Flash memory
  Size: GM10-1: 500 MB
  GM10-2: 1.2 GB
- External storage medium:
  Medium: SD card (SD/SDHC)
  Size: 1 to 32 GB (1 GB included)
  Format: FAT32 or FAT16
  Data saving to the external storage medium:
  Select whether to save automatically or when a medium is inserted for event data, display data, manual sampled data, and report data.
  Auto save: Automatically saves to the internal memory when a data files is created.
  Save when a medium is inserted:
  Saves unsaved data files when an external storage medium is inserted.
- Data type:

Data type	Saved content
Display data	Maximum and minimum values per recording interval
Event data	Instantaneous values at recording intervals
Alarm summary data	Summary of warnings
Manual sampled data	Instantaneous values at a user specified time
Setup data	GM10 and I/O module settings
Report data (/MT option)	Report at each scheduled time of report
Health monitor log data	Health score and good/bad judgment (OK / NG)

- Event data:
  Target: Measurement (I/O module)/math (/MT)/communication (/MC) channels, alarm summary, message summary
  Recording interval: 1 ms / 2 ms / 5 ms / 10 ms / 20 ms / 50 ms / 100 ms / 200 ms / 500 ms / 1 s / 2 s / 5 s / 10 s / 15 s / 20 s / 30 s / 1 min / 2 min / 5 min / 10 min / 15 min / 20 min / 30 min selectable
  Note: Some intervals will be unavailable depending on the scan interval and number of channels.
  Number of channels: Determined by the scan interval and recording data type

All Rights Reserved. Copyright © 2014, Yokogawa Electric Corporation

Measurement mode: Normal

GM10-1

Recording interval	Number of channels
100 ms	100
200 ms	200
500 ms or longer	500

GM10-2

Recording interval	Number of channels *1	
	Event	Display + Event
100 ms	500	100
200 ms	500	200
500 ms	1000	500
1 s or longer	1000	1000

Measurement mode: High speed

Recording interval	Number of channels *1	
	GM10-1	GM10-2
1 ms	2	10
2 ms	4	20
5 ms	10	50
10 ms	20	100
20 ms	40	150
50 ms	100	150
100 ms	100	200
200 ms	200	500
500 ms	500	1000
1 s or longer	500	1000

Measurement mode: Dual interval

Recording interval	Number of channels *1 *2	
	GM10-1	GM10-2
1 ms	---	5
2 ms	---	10
5 ms	5	25
10 ms	10	40
20 ms	20	50
50 ms	50	50
100 ms	100	100
200 ms	100	200
500 ms	250	600
1 s or longer	250	600

*1 Total number including I/O channels, math channels, and communication channels

*2 Number of channels that can be recorded is the same for scan group 1 and scan group 2.

Data size (binary):
Analog input data: 6 bytes/ch.
Analog output data: 6 bytes/ch.
Digital I/O data: 2 bytes/ch.
Math channel data: 6 bytes/ch.
Communication channel data: 6 bytes/ch.
File size (binary): Up to 18 MB
Number of files (including display data) (internal memory)
GM10-1: Up to 500
GM10-2: Up to 1000
Internal memory operation: FIFO (First In First Out)
Data format: Binary or text*
* Selectable when saving to the external storage medium

Mode:
Free: Records data at all times
Trigger: Starts recording data when a certain event occurs and records for the specified interval
Repetition trigger: Repeat Trigger mode

Event data file sample time (estimated)

GM10-1 (when recording interval is 1 s)

I/O channels	Total sample time
30	Approx. 29 days
100	Approx. 9 days

GM10-2 (when recording interval is 1 s)

I/O channels	Total sample time
30	Approx. 71 days
100	Approx. 23 days
300	Approx. 7 days

• Display data:
Target: Measurement (I/O module)/math (/MT)/ communication (/MC) channels, alarm summary, message summary
Trend interval (/div) (recording interval): 5 s / 10 s / 15 s / 20 s / 30 s / 1 min / 2 min / 5 min / 10 min / 15 min / 20 min / 30 min selectable
Note: Some intervals will be unavailable depending on the scan interval and number of channels.
Number of channels: Determined by the trend interval and recording data type

GM10-1

Trend interval setting (/div)	Recording interval	Number of channels
5 s	100 ms	100
10 s	200 ms	200
15 s or longer	500 ms or more	500

GM10-2

Trend interval setting (/div)	Recording interval	Number of channels	
		Category	Display + Event
5 s	100 ms	200	100
10 s	200 ms	500	200
15 s	500 ms	1000	500
30 s or longer	1 s or longer	1000	1000

Data size (binary):
Analog input data: 12 bytes/ch.
Analog output data: 12 bytes/ch.
Digital I/O data: 4 bytes/ch.
Math channel data: 12 bytes/ch.
Communication channel data: 12 bytes/ch.
File size (binary): Up to 18 MB
Number of files (including event data) (internal memory)
GM10-1: Up to 500
GM10-2: Up to 1000
Internal memory operation: FIFO(First In First Out)
Data format: Binary or text *
* Selectable when saving to the external storage medium

Display data file sample time (estimated)

GM10-1 (when recording interval is 1 min)

I/O channels	Total sample time
30	Approx. 914 days (2.5 years)
100	Approx. 239 days (9 months)

GM10-2 (when recording interval is 1 min)

I/O channels	Total sample time
30	Approx. 2184 days (5.9 years)
100	Approx. 702 days (1.9 years)
300	Approx. 239 days (7 months)

• Alarm summary:
Saved item: Alarm of each data item
Maximum number of items saved to internal memory: 5000

All Rights Reserved. Copyright © 2014, Yokogawa Electric Corporation

Internal memory operation: FIFO(First In First Out)
Maximum number of items displayed on Web screen: Latest 1000
Save operation: Saves alarm information to internal memory when an alarm occurrence or release is detected
* Alarm information is saved to the corresponding event or display data file.
Saved content: Target channel name (tag name), time of occurrence or release, warning type, etc.
Save operation methods: Web browser, communication command

• Message summary:
Description: Saves a summary of written messages
Saved item: Message string
Maximum number of items saved to internal memory: 1000
Internal memory operation: FIFO (First In First Out)
Maximum number of items displayed on Web screen: Latest 450
Save operation: Saves message information to internal memory when message writing operation is performed.
* Message information is saved to the corresponding display or event data file.
Saved content: Message name, writing interval, user name, write group

• Manual sampled data:
Saved item: Measurement (I/O module)/math (/MT)/ communication (/MC) channels
Number of saved channels:
GM10-1: Up to 50, GM10-2: Up to 100
Save operation methods: Web browser, communication command, event action
Maximum number of events saved to internal memory: 400
Internal memory operation: FIFO (First In First Out)
Auto saving to an external storage medium: Every time manual sampling is executed
Data format: Text format

• Setup data
Saved item: GM10 and I/O module settings (including setup data of modules connected via GX90EX)
Saved events: Operation from a Web browser, communication command, event action, setting changes (when the advanced security function (/AS) is on)
Data format: Text format
Binary format when the advanced security function (/AS) is on

• Report data (/MT option):
Saved item: Measurement (I/O module)/math/ communication channels
Select from average, maximum, minimum, sum, and instantaneous values
Type: Hourly + daily, daily + weekly, daily + monthly
User specified time (batch, day custom)
Saved events: Timeout time of each report type
Maximum number of items saved to internal memory: 800
Internal memory operation: FIFO (First In First Out)
Auto saving to an external storage medium: Save every time of the event
Data format: Test format

• Health monitor log data
Maximum number of items saved to internal memory: 300
Internal memory operation: FIFO (First In First Out)
Auto saving to an external storage medium: When 100 logs are accumulated
Data format: Test format

• User data
Saved item: Excel report template (/MT), PDF/print report template, SSL communication certificate (server certificate, trusted certificate), electronic signature certificate (/MT), profile trend, load predictive detection model
Recorded events: Operation from a Web browser, communication command

Message Write Function

Messages can be written to event data and display data.

• Message type:
Preset message: Writes preset text
Free message: Writes text that you enter
Auto message: Writes fixed text when power recovers after a power failure occurs during recording and writes the result when calculating the health score.

• Preset message, free message:
Number of displayable characters: Up to 32
Displayable character types:
Alphanumeric, Japanese, and Chinese characters
Number of messages: Preset message: 100
Free message: 10
Free messages that you enter are also saved in setup files.
Write method: Operation from a Web browser, communication command, event action
Write destination: Specified event data or display data group or all groups

• Auto message
Displayed text: "Power-fail" + the time of failure occurrence
Example: Power-fail 2014/01/06 09:49:21
Results when calculating health score
Example: OK +1.000 ModelFileName.GDG
Write method: Writes a message when power recovers after a power failure occurs during recording and writes the result when calculating the health score. Whether or not to write is selectable.
Write destination: All display data or event data group

Alarm Function

• Number of alarms: Up to four alarms (levels) for each measurement channel
• Alarm type: High limit, low limit, difference high limit, difference low limit, high limit on rate-of-change, low limit on rate-of-change, delay high limit, delay low limit, profile high limit, and profile low limit
• Alarm delay time: 1 s to 24 hours (for each channel)
• Rate-of-change calculation interval of rate-of-change alarms: 1 to 32 times the scan interval (common to all channels)
• Hysteresis: 0.0 to 5.0% of the span (for each alarm (level))

All Rights Reserved. Copyright © 2014, Yokogawa Electric Corporation

- Alarm output:
  DO output:
  DO operation: Energize/de-energize, hold/nonhold, AND/OR, reflash
  Internal switch output:
  Number of internal switches: 100
  Internal switch operation: AND/OR operation selectable
- Status LED display operation: Select whether or not to hold the indication until an alarm acknowledge operation is performed
- Alarm no logging function: Possible to output only to the DO or internal switch when an alarm occurs (warning display and recording to the alarm summary are not performed)
- Alarm information: Displays a log of alarm occurrences on the alarm summary
- Reflash: The duration for which the reflash relays are deactivated can be set to 500 ms, 1 s, or 2 s.
- Individual alarm ACK function: Alarm display and relay output can be canceled on individual alarms.

Event Action Function

- Description: Execute a specified operation when a given event occurs.
- Number of settings: 50
  Events: Remote control input, etc.
  Timer: Number of timers: 12
  Match time timer: Number of timers: 12
  Action: Specify memory start/stop, alarm ACK, etc.

Control Event Action Function

See the GX90UT PID Control Module General Specifications (GS04L53B01-31EN).

Equipment/Quality Easy Predictive Detection

Health Monitor Function

- Target channel: Input/output channel, math channel, communication channel
- Number of target channels: 20
- Health monitor: Judgment (OK / NG (Not Good)), health score and predictive detection model name
- Predictive detection section:
  Start/Stop: Screen operation, Sync with recording, Threshold, Event action, Modbus, Communication command, Repeat
- Operating conditions:
  Multi-batch function (/BT): Off
  Measurement mode: Normal

Profile Function

- Target channel: Input channel, math channel, communication channel
- Number of target channels: 20
- Predictive detection section:
  Start/Stop: Screen operation, Sync with recording, Threshold, Event action, Modbus, Communication command, Repeat
- Hold: Screen operation, Event action, Modbus, Communication command
- Operating conditions:
  Multi-batch function (/BT): Off
  Measurement mode: Normal
  Scan interval: 500 ms or more
  Note: Communication channel (/MC) required if using the profile function.

Security Function

- Key lock function: All GM10 key operations
- Login function: Only registered users can operate the GM (Ethernet /serial (/C3) /USB/ Bluetooth (/ C8) operation) (including Web browsers)
  System administrators and users: Up to 50
  Number of Authority of user: 10 levels

Manual Sampling Function

- Description: Measured value at a user specified time
- Target: Measurement (I/O module)/math (/MT)/ communication (/MC) channels
- Number of recording channels:
  GM10-1: Up to 50
  GM10-2: Up to 100
- Maximum number of data values that the internal memory can store: 400
- Data format: Text

Report Function (/MT option)

- Description: Report at each scheduled time of report
- Target: Measurement (I/O module)/math/ communication channels
- Number of report channels: 60
- Maximum number of data values that the internal memory can store: 800
- Data format: Text

Setup Function

- Description: GM10 and I/O module setup
- Setup method: Web browser, communication commands, Hardware Configurator
- Output/read destination (for saving/loading): External storage medium

Clock Function

- Clock: With a calendar function
  Accuracy: ±5 ppm
  Excludes the delay (of 1 second, maximum) caused when the power is turned on.
- Time difference between units: ±2 ms max. (time difference between a sub unit and main unit)
- Time setting: Using Web operation, communication commands, event action, or SNTP client function
- Time adjustment method:
  Limit in which the time is gradually adjusted:
  Select from the available settings between 5 s and 15 s.
  Whether to change an out-of-limit operation immediately or report it as an error can be selected.
  While memory sampling:
  Corrects the time by 1 ms for each second.
  While memory is stopped:
  Immediately change the time.
- Time zone: Sets the time difference from GMT
- Date format: Select "YYYY/MM/DD", "MM/DD/YYYY", "DD/MM/YYYY" or "DD.MM.YYYY".
  MM expression can be selected from the numeric character or ellipsis. Ex. January: 01 or Jan
  The delimiter can be selected from "/", ".", "-".

All Rights Reserved. Copyright © 2014, Yokogawa Electric Corporation

Ethernet Communication Function

- Electrical specifications: Conforms to IEEE 802.3
- Connection: Ethernet (10BASE-T/100BASE-TX)
- Max. segment length: 100 m
- Max. connecting configuration:
  Cascade Max. 4 level (10BASE-T), Max. 2 level (100BASE-TX)
- Connector: RJ-45
- Protocols: TCP, UDP, IP, ICMP, ARP, DHCP, HTTP, FTP, SMTP, SNTP, Modbus, dedicated protocols, and DARWIN compatible communication
- E-mail client: Automatically sends e-mail at specified times
  E-mail is sent by events as below.
  - Alarm occurring/alarm cancelling
  - Recover from power failure
  - Report data generating
  - Storage medium error, FTP client function error
  - Specified time period
  - When the health score is below the early notification threshold (if a threshold is set) and when the health score is less than 0
- Supported authentication methods:
  POP before SMTP, SMTP authentication (Login, Plain, CRAM-MD5)
- FTP client: Automatically transfers data files to the FTP server
  Applicable files: Event data, display data, report data, etc.
- FTP server: Transfers files, delete files, manipulate directories, and outputs file lists
  Max. number of the simultaneous connections: 4
- Web server: GM10 real-time monitoring and setting changes/operations can be performed from a Web browser.
  Max. number of the simultaneous connections: 4
- SNTP client: Inquires the time to the SNTP server and sets the GM10
- SNTP server: Outputs the GM10 time.
  Time resolution: 10 ms
- DHCP client: Automatically obtains the network address settings from the DHCP server
- Modbus client: Reads data from another device and writes to the registers
  (Required /MC option)
  Number of connectable severs:
  GM10-1: Up to 16
  GM10-2: Up to 32
- Modbus server: Loads measurement and math channel data
  Loads and writes communication channel data
  Loads elapsed time
  Some control commands such as memory start
  Filtering to accept connections only from specific IP addresses available
  Max. number of the simultaneous connections: 4 (or 2 when using the network module (protocol: PROFINET))
- Setting/Measurement server:
  Operate and set the GM10 and output data using a dedicated protocol.
  Max. number of the simultaneous connections: 4
- DARWIN compatible communication server:
  Supports some DARWIN commands
  Communication with the GM10 is possible using DARWIN communication commands.
  Output-related commands: Outputs measurement channel data, math channel data, relay status, decimal place of measurement channels, decimal place of math channels, system configuration information
  Setup-related commands: Range, Scale unit, Alarm, Time, Moving average
  Operation-related commands: Reset alarm, Reset timer, Start MATH calculation, Rebuild system, Initialize, Input communication, Output communication DO, Write message

Note: To control the GM using the DARWIN compatible communication function, you must configure the GM (module type, channel numbers (unit numbers and slot numbers)) to match DARWIN.

Batch Function

- Function: Data management using batch names.
  Enter text fields and batch comments in the data file.
- Batch name: Added to the file name of the event data and display data.
  Structure: Batch number (up to 32 characters) + lot number (up to 8 digits)
  Use/not use selectable for lot number, on/off selectable for auto increment function.
- Text field: Adds text to the event data and display data. There are 24 available text fields.
  Title: Up to 20 characters
  Text: Up to 30 characters per field
- Batch comment: Adds text to the event data and display data. 3 comments (max. 50 characters/comments) are available.

USB Communication Function

- Compliant standard: USB2.0
- Interface:
  Connector: mini B type
  Number of ports: 1
  Power supply: Self powered
- Implemented protocol: Dedicated protocol
  Operate and set the GM10 and output data using a dedicated protocol.
- Communication conditions:
  Baud rate: 115200 bps, Parity: None, Data length: 8 bit, Stop bit: 1 bit, Handshake: Off

FAIL Output Function

- Function: Relay output from a specified channel of the GX90YD or GX90WD when a CPU error occurs
- Output format: Relay contact
- FAIL output: Relay contact output when any of the various errors is detected
  Normally energized; de-energized when a system error occurs

Printer Output Function

- Printers supporting the HP PCL5c language and can print through port 9100 on a LAN connection
  Supports printing using the report template function (/MT).

All Rights Reserved. Copyright © 2014, Yokogawa Electric Corporation

SSL Communication Function

Communication that sends and receives information encrypted by the SSL (Secure Socket Layer) protocol is possible.

- Server function:
  Supported servers: HTTP server and FTP server
  Private key: Can be created on the GM10
  Server certificate: Server certificates created by users can be saved in the internal memory. Self-signed certificates can be created on the GM10.
- Client function:
  Supported clients: FTP client and SMTP client
  Trusted certificate: Trusted certificates (up to 80 KB total) can be saved in the internal memory.

Electronic Signature Function

Electronic signatures can be added to report files created in PDF format using the PDF form creation function. An electronic signature is provided each time a report file is created.

- Electronic signature certificate:
  Electronic signature certificates created by certificate issuing organizations can be saved in the internal memory.

Loop Control Function (when a PID control module is installed)

See the GX90UT PID Control Module General Specifications (GS04L53B01-31EN).

Other Function

- Firmware update function:
  The firmware of the GM10 and connected modules can be updated from the GM10.
- A/D calibration function:
  The A/D calibration of connected modules can be operated from the GM10.

Web Server Function

Real-time data monitoring and setting changes/operations can be performed from a Web browser.

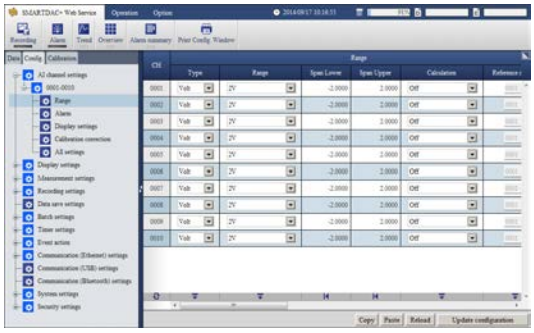

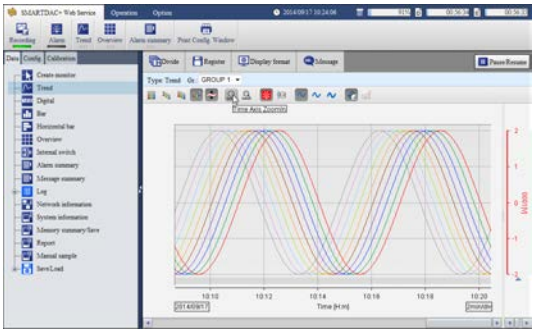

PC System Requirements

Hardware

Item		Specifications
CPU	Windows 10	Intel Core2 Duo E6300 or faster x64 or x86 processor
	Windows 11	Intel Core i5 or faster, and 8th generation or later Intel processor.
Internal memory	Windows 10	2 GB or more
	Windows 11	8 GB or more
Hard disk	Windows 10	100 MB or more free space, NTFS recommended
	Windows 11	64 GB or more free space, NTFS recommended
Printer		Printer compatible with the OS
Mouse		Mouse compatible with the OS
Display		Display compatible with the OS with 1024×768 dots or better, high color or better
Communication port		Ethernet port compatible with the OS and TCP/IP protocol

OS

Item	Specifications
Windows 10	Home (32-bit and 64-bit editions)
	Pro (32-bit and 64-bit editions)
	Enterprise LTSB (32-bit and 64-bit editions)
	Enterprise LTSC (32-bit and 64-bit editions)
Windows 11	Home (64-bit edition)
	Pro (64-bit edition)
	Enterprise (64-bit edition)

Compatible Browsers

Microsoft Edge, Google Chrome

● Specifications of Options

Advanced Security Function (/AS)

Security functions, electronic recording and electronic signature functions, and data integrity functions complying with FDA 21 CFR Part11 will be added.

- Enabling/disabling the advanced security function:
  You can enable or disable the advanced security function.
  * The set values and data stored in the internal memory are initialized each time the function is enabled or disabled.
- Login function: Using the login function described below, you can enter security settings on the instrument
  User name, password, and user ID (depending on the use/not use setting)

User level:
Administrator: No restrictions (all operations)
Second administrator: Admin property and user property settings can be used to restrict executable operations and signatures.
User: Operations that can be executed can be set using the authority of user settings.
Monitor user: Only monitoring and changing passwords are possible.
Number of users: Up to 100 including administrators, second administrators, users, and monitor users (up to 200 on the GM10-2)
Admin property: Restrictions can be placed on GM operations that second administrators are allowed to perform.

All Rights Reserved. Copyright © 2014, Yokogawa Electric Corporation

Authority of user: Users can be restricted from performing GM operations.
Number of authority of user: 10
Password expiration period: Off, 1 month, 3 months, 6 months or 1 year (no expiration period for monitor users)
Password policy function: The minimum number of characters, the types of characters that must be included, and the number of previous passwords can be set.
Advance notice of expiry date: A message encouraging the user to change the password is displayed when the user logs in during the specified notification period (Off, 5 days before, 10 days before).
Signature restriction: Users can be restricted from signing measurement data files.
Number of signature restrictions: 8

- Password control function: Logins are verified by a Kerberos v5 authentication server* (only user name and password)

Encryption method:
AES128-CTS-HMAC-SHA1-96
AES256-CTS-HMAC-SHA1-96
ARCFOUR-HMAC-MD5
Pre-Auth function: use
Cross-realm function: use

* The function has confirmed compatibility with Windows Server 2016 / Windows Server 2019 / Windows Server 2022 / Windows Server 2025 Active Directory.
Note: With Windows Server 2025 and later, you cannot connect using the ARC4 encryption method.

- Audit trail function: The history of operations from when the recording was stopped the previous time to when the recording was stopped this time is recorded as event log and saved in measurement data files along with the settings.
  Comments that are entered when settings are changed or when an alarm is acknowledged are recorded in the event log. This allows you to check the comments and details of the setting changes.
- Data anti-tamper function: Settings and measured data are saved as encrypted binary files.
- Data type: Only for display or event
  Trigger mode is not possible with event data.
- Signature function*: Includes approval information to measurement data files

Information that can be included: User name, pass/fail, comment
Number of signatures: Up to 3 per file
Signature privileges: Can be set for each user

* Universal Viewer is used to sign measurement data.
- Signing measurement data files is not possible from the GM10.

- Automatic delay alarm message function: With delay alarms, a message (fixed string) can be written automatically when the delay period count starts and stops.
- Measurement mode limitations: Measurement modes High speed and Dual interval cannot be used.
- Module limitations: PID control modules cannot be used.

Serial Communication Interface (/C3)

- Connection: EIA RS-422/485
- Protocol: Dedicated protocol, Modbus/RTU, or DARWIN compatible communication
- Setting/measurement server function:
  Operation, setting or output of measurement data are available by dedicated protocol.
- Synchronization: Start-stop synchronization
- Transmission mode (RS-422/485):
  RS-422: Four-wire half-duplex multi-drop connection (1:n (n = 1 to 31))
  RS-485: Two-wire half-duplex multi-drop connection (1:n (n = 1 to 31))
- Baud rate: 1200, 2400, 4800, 9600, 19200, 38400, 57600, or 115200 bps
- Data length: 7 or 8 bits
- Start bit: 1 bit
- Stop bit: 1 bit or 2 bit
- Parity: ODD, EVEN, or NONE
- Communication distance:
  1200 m (57600 bps or less), 600 m (115200 bps)
- Modbus/RTU communication:
  Reading or writing of measurement data on other instruments is available by Modbus protocol.
  Communication channel function (/MC option) is needed to read measurement data from other instruments.
- Modbus operation modes: Master or slave

Bluetooth Communication Function (/C8)*

Data monitoring, setting, and operation is possible on a tablet, such as a Bluetooth compatible PC or smartphone, through Bluetooth communication.

- Compliant standard: Bluetooth Ver 2.1+EDR
- Supported profile: SPP (Serial Port Profile)
- Carrier frequency band: 2402 to 2480 MHz
- Channel spacing: 1 MHz
- Number of channels: 79
- Communication distance: Approx. 10 m (depends on the operating environment) (Class2)
- Protocol: Dedicated protocol
  Operate and set the GM10 and output data using a dedicated protocol.
- Pairing: Maximum number of connections 10 (multi pairing)
  Overwritten through FIFO when 10 units are exceeded
  Displays the 6-digit SSP (Secure Simple Pairing) authentication code and checks for a match (numeric comparison)
- Password request function: Requests connected terminals for passwords

* Regions in which Bluetooth can be used are restricted by the Radio Waves Act of each country. For details, contact the appropriate authority.

Mathematical Functions with Report Function (/MT)

Mathematical Function:

- Number of math channels: GM10-1: 100, GM10-2: 200

Note: There is a limitation on the number of math channels when the scan interval is shorter than 100 ms.
See “Restrictions and Cautions” on page 27.

All Rights Reserved. Copyright © 2014, Yokogawa Electric Corporation

- Scan interval

Measurement mode	Scan interval
Normal	Scan interval
High speed	Scan interval
Dual interval	Master scan interval

- Expression: Up to 120 characters
- Operations:
  General arithmetic operations:
  Four arithmetic operations (+, -, *, /), square root, absolute, common logarithm, natural logarithm, exponential, and power
  Relational operations: <, ≤, >, ≥, =, and ≠
  Logic operations: AND, OR, NOT, and XOR
  Statistical operations:
  TLOG (maximum, minimum, average, sum, P-P values, pulse sum, F-value of time series data), CLOG (maximum, minimum, average, sum, P-P values of a specified channel)
  Special operations: PRE, HOLD, RESET, CARRY
  Conditional operation: [a?b:c]
  Bit operation: BIT
  Integer extracting operation: INT
  Remainder extracting operation: MOD
  Trigonometric functions: SIN, COS
  CP calculation: CP.O2, CP.CO2
  Special CLOG.AVE calculation: CLOG.PAVE
- Computation accuracy:
  Double-precision floating point
- Data that can be used
  Channel data:
  Measurement channels: 0001 to 6516
  Math channels: A001 to A100 (GM10-1)
  A001 to A200 (GM10-2)
  Communication channels:
  C001 to C300 (GM10-1)
  C001 to C500 (GM10-2)
  Communication channel raw data:
  RC001 to RC300 (GM10-1)
  RC001 to RC500 (GM10-2)
  Constants: K001 to K100
  Variable constant: W001 to W100
  Internal switches: S001 to S100
  Flags: F01 to F20
  Recording state: REC01
  Integer data: Z000 to Z999
  Elapsed time: ETCNT01 to ETCNT50

Logic math function:

A function that outputs calculated results as 0 or 1 to DOs or internal switches

- Number of logic maths: 50
- Math interval: Fastest 100 ms
- Expression: Up to 120 characters
- Math type: Basic arithmetic, relational, logical, conditional, bit
- Data that can be used: All channel data
  Logic math: LM001 to LM050
- Output destination: Internal switches, DO channels (only when set to Manual)
- Setting change: Cannot be changed during recording

Elapsed time calculation function:

Measures the elapsed time after a condition is met.

- Calculations: 50
- Operation interval: Same as the scan interval (but at shortest interval of 100 ms and a scan interval of 2s/5s, the value also updates at 2s/5s.)
- Count unit: Hours, minutes, seconds
- Digital display: Count or time format
- Start/stop state: Screen operation, communication, event action
- Recording: Configure elapsed time calculation on the math channel and record

Elapsed time screen: For display of the elapsed time and operation

Report function:

Report at each scheduled time of report.

- Number of report channels: 60
- Target: Measurement (input/output module)/math/communication channels

Note: There is a limitation on the number of report channels when the scan interval is shorter than 100 ms.
See “Restrictions and Cautions” on page 27.

- Scan interval

Measurement mode	Scan interval
Normal	Scan interval
High speed	Scan interval
Dual interval	Scan interval of each group

- Report types: Hourly + daily, daily + weekly, daily + monthly, batch, day custom
- Computation types: Average, maximum, minimum, sum, instantaneous value

Unit of sum: OFF, /s, /min, /hour, /day

- Report templates: Office Open XML spreadsheet files (which can be displayed with Microsoft Office Excel) or PDF files can be output or printed out with any LAN-connected printer supporting the HP PCL5c language and the port 9100.

Communication Channel Function (/MC)

Data of external devices, such as PLC and PC, can be displayed and recorded.

- Number of communication channels:
  GM10-1: 300 (C001 to C300)
  GM10-2: 500 (C001 to C500)

Note: There is a limitation on the number of communication channels when the scan interval is shorter than 100 ms.
See “Restrictions and Cautions” on page 27.
The minimum communication channel update interval is 100 ms.

- Scan interval

Measurement mode	Scan interval
Normal	Scan interval
High speed	Scan interval
Dual interval	Master scan interval

- Calibration correction:
  Mode: Linearizer approximation, linearizer bias, correction coefficient *
  Number of set points: 2 to 12

* Only when the /AH option is installed

Log Scale (/LG)

A logarithmic voltage that has been converted from a physical value is applied to the GM10, and then the GM10’s Log scale (logarithmic scale) is used to display and record the physical value.

- Input type: Log input (logarithmic input), pseudo log input (input that supports pseudo logs), log linear input (input that is linear on a logarithmic scale)
- Range: 20mV/60mV/200mV/1V/2V/6V/20V/50V
- Scalable range:
  Log input: 1.00E-15 to 1.00E+15
  (15 decades maximum)

All Rights Reserved. Copyright © 2014, Yokogawa Electric Corporation

Scale_L < Scale_U
If the lower limit mantissa is 1.00, the difference between the exponents must be 1 or more.
If the lower limit mantissa is a value other than 1.00, the difference between the exponents must be 2 or more.
Pseudo Log Input/Log linear input
1.00E-15 to 1.00E+15 (15 decades maximum)
The upper limit mantissa is the same as the lower limit mantissa.
If the lower limit mantissa is 1.00, the value must be between 1.00E–15 and 1.00E+15, the difference between the exponents must be 1 or more, and the maximum decades is 15.
If the lower limit mantissa is a value other than 1.00, the value must be between 1.01E–15 and 9.99E+14, the difference between the exponents must be 1 or more and the maximum decades is 15.

- Alarm type: High limit, low limit, delay high limit, delay low limit
- Alarm setting range: The range converted into the LOG scale corresponding to -5% to 105% of the span width.
- Alarm hysteresis: Fixed to 0
- Green band setting range: The lower limit to the upper limit of the scale. However, the lower limit of the display position must be smaller than the upper limit.
- Decimal place: 1 or 2
- Misc: Nonlinear input is possible by correcting the input value.

EtherNet/IP Communication (PLC communication protocol) (/E1)

Can join an Ethernet/IP network as an adapter (or a server)

- Loading data of the I/O channel, math channel (/MT) and alarm status.
  Note: Control alarm status cannot be loaded.
  I/O channel: GM10-1: 100, GM10-2: 500
  Math channel: GM10-1: 100, GM10-2: 200
- Loading and writing data from/to the communication channel (/MC)
  Communication channel:
  GM10-1: 300, GM10-2:500
- Implementation level: Level 2
- Operations that can be performed using explicit messages:
  Communication is performed using the CIP extension feature of the PLC-specific PCCC command by Rockwell Automation.
  Start and stop recording and computation
  Write batch information
  Write messages
  Load alarm status
  Write alarm setpoints and alarm types
  Alarm ACK
  Note: The following operations are not possible: load control alarm status, write control alarm setpoints and control alarm types, control alarm ACK.
- Number of the simultaneous connection: Max. 10 (Explicit message)
- Supported protocols: EIP/PCCC, EIP/native

WT Communication (/E2)

Acquires data by connecting to WT equipment manufactured by Yokogawa Test & Measurement Corp. via Ethernet communication.

- Supported models: WT1800, WT500, WT300
- Number of connectable units: 16
- Communication cycle:
  500 ms/1 s/2 s/5 s/10 s/20 s/30 s
- Types of data that can be obtained: Voltage, current, power, power factor, phase, electrical energy, high-frequency wave, etc.
- Number of data allocations: 300

Multi-batch Function (/BT)

Recording start/stop and data file creation is possible for each batch.

- Number of multi batches
  GM10-1: 6 max., GM10-2: 12 max.
- Batch single operation: Memory start/stop, math reset, message writing
- Batch overview operation: Computation start/stop, report start/stop, manual sampling, setup data save/load
- Scan interval: 500 ms, 1 s, 2 s, 5 s (common to all batches)
- Data type: Display or event only Trigger mode not available for event data.
- Recording interval: Common to all batches
- Data file: Display or event data file created for each batch
- Number of display groups:
  GM10-1: 6 max. per batch
  Number of channels per group: 20
  GM10-2: 12 max. per batch
  Number of channels per group: 20
  Channels assigned to the display group of each batch and those set as recording channels are recorded to data files.
- Batch single settings: Group, trip line, file header, data file name, text field, batch number, lot number
- Measurement mode limitations: Measurement modes High speed and Dual interval cannot be used.

Aerospace Heat Treatment (/AH)

Supports heat treatment application AMS2750/NADCAP
Schedule management for periodically executing calibration correction configuration and the like
In correction coefficient mode of calibration correction, two biases can be specified: one based on thermocouple and another based on device

- Number of manageable schedules
  GM10-1: 6 max., GM10-2: 12 max.
- Calibration correction mode: Off, linearizer approximation, linearizer bias, correction coefficient

Number of set points: 2 to 12

OPC-UA Server (/E3)

Data acquired by the GM can be accessed through Ethernet communication from a host system (OPC-UA client).

- Communication
  Type: OPC-UA Server
  Encoding: UA Binary
  Protocol: OPC UA TCP
  Maximum number of connections: 3 sessions
  Profile: Micro Embedded Device Server

All Rights Reserved. Copyright © 2014, Yokogawa Electric Corporation

- Security
  Mode: None
  Encryption: None
  Login: Anonymous, Username
- Data acquisition:
  Measurement value, alarm status, alarm value
  Computation value, alarm status, alarm value
  Communication value, alarm status, alarm value
  Batch information
- Data writing: Measurement channel (DO channel only), communication channel, alarm value, batch information
- Other acquired information: Device name, serial number, time, device status
- Port number: 4840 (changeable: 1 to 65535)
- Number of items: 300 max. (MonitoredItem/Session)
- Fastest period: 100 ms
- Service set:

Discovery	FindServers, GetEndpoints
SecureChannel	OpenSecureChannel, CloseSecureChannel
Session	CreateSession, ActivateSession, CloseSession
View	Browse, BrowseNext, TranslateBrowsePathsToNodeIds
Attribute	Read, Write
MonitoredItem	CreateMonitoredItems, ModifyMonitoredItems, DeleteMonitoredItems, SetMonitoringMode
Subscription	CreateSubscription, ModifySubscription, DeleteSubscriptions, Publish, Republish, SetPublishingMode

- When a PID control module is installed, loop objects are displayed in place of channel objects.
  Data collection: PV, SP, OUT, R/S, A/M/C, R/L, alarm status in loops
  Data saving: OUT, R/S, A/M/C, R/L

SLMP Communication (Mitsubishi PLC) (/E4)

Protocol function of CC-Link family that enables connection from GM to Mitsubishi Electric PLC without sequencer program.
The GM operates as an SLMP client. Writing GM measurement data to a PLC and reading PLC data into communication channels* are possible.

* The communication channel function (/MC option) is required.

- Number of connection destination servers: 16 max.
- Read cycle: 100 ms, 200 ms, 500 ms, 1 s, 2 s, 5 s, 10 s, 20 s, 30 s, 1 min
- Number of commands that can be registered:
  GM10-1: 100
  GM10-2: 200
- Communicable internal data:
  Special relay (SM), special register (SD), input (X), output (Y), internal relay (M), latch relay (L), annunciator (F), edge relay (V), link relay (B), data register (D), link register (W), timer contact (TS), timer coil (TC), current timer value (TN), integration timer contact (SS), integration timer coil (SC), current integration timer value (SN), counter contact (CS), counter coil (CC), current counter value (CN), special link relay (SB), special link register (SW), direct access input (DX), direct access output (DY), index register (Z), file register (R, ZR), extended data register (D), extended link register (W)

Device code is indicated in parentheses.

Program Control Function (/PG)

See the PID Control Module General Specifications (GS 04L53B01-31EN).

PROFINET Communication Function (when GX90NW is installed)

See the Network Module General Specifications (GS 04L53B51-01EN).

Integration Bar Graph Function (/WH)

The integration bar graph function reads the report file (a hourly report or hourly report / daily report) stored on the SD card of GM 10 and displays the integration bar graph and the integration trend in the web application.

- Report file monitoring and display update interval:
  5 minutes

All Rights Reserved. Copyright © 2014, Yokogawa Electric Corporation

■ GM10 HARDWARE SPECIFICATIONS

- Material: Polycarbonate
- Color:
  Case: Smoke blue (Munsell 4.1PB 6.0/4.5 equivalent)
  Front panel: Light charcoal gray (Munsell 10B 3.6/0.3 equivalent)
- External Dimensions: 45.1(W)×111(H)×107.1(D) mm
- Weight: Approx. 0.25 kg

● Power Supply and Isolation

- Power supply: Supplied from the GM90PS Power Supply Module
- Power consumption: 2.8 W maximum
- Insulation resistance: Between RS-422/485 terminal and internal circuit and between Ethernet terminal and internal circuit, 20 MΩ or higher at 500 V DC
- Isolation diagram

RS-422/485 terminal (/C3 option)	Internal circuit GM90PS ground terminal
Ethernet port	

Circuits delimited by lines are mutually isolated.

● Other Specifications

- Memory backup: A built-in lithium battery backs up the settings and runs the clock.

● External Dimensions

Unit: mm [approx. inch]

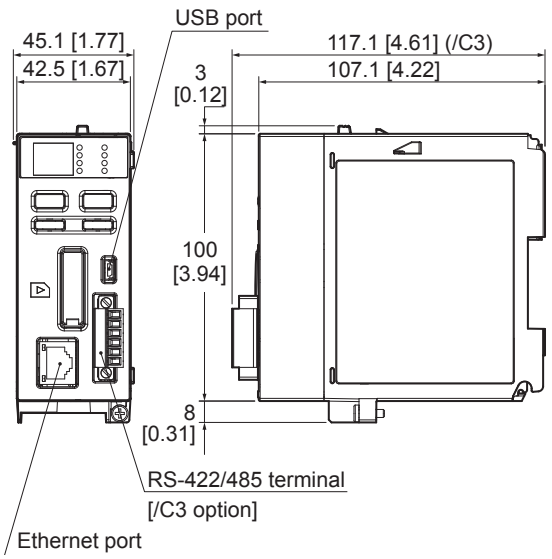

■ GM90MB MODULE BASE SPECIFICATIONS

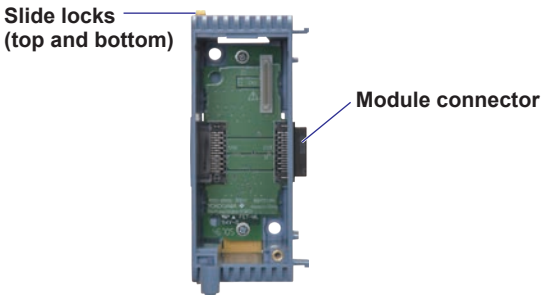

- Number of installable modules: 1
- Power consumption: Less than 0.01 W
- Automatic module number assignment function: Automatically assigns a module number when a module is connected
- Material: Polycarbonate
- Color: Smoke blue (Munsell 4.1PB 6.0/4.5 equivalent)
- External Dimensions: 57.7(W)×135(H)×103.5(D) mm
- Weight: Approx. 0.15 kg

● External Dimensions

Unit: mm [approx. inch]

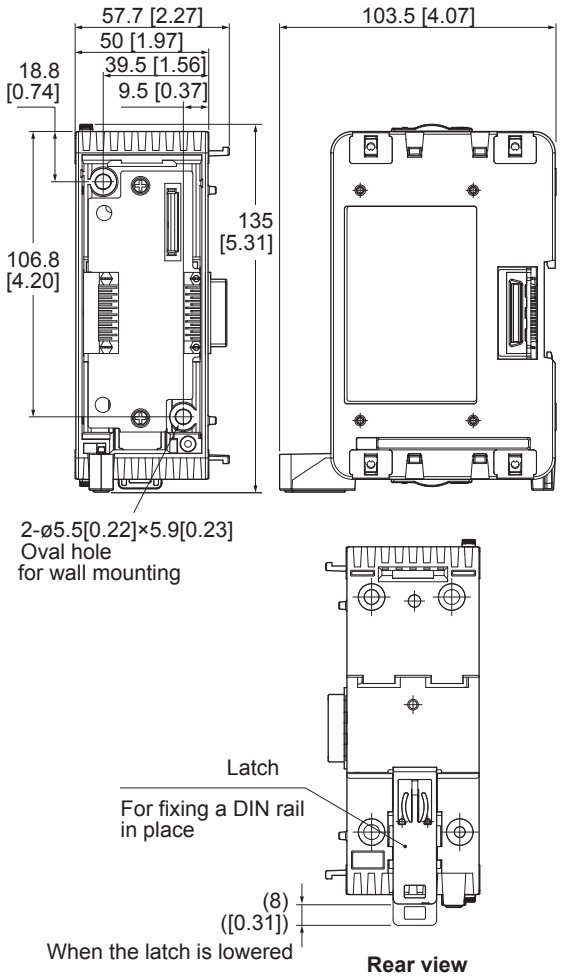

All Rights Reserved. Copyright © 2014, Yokogawa Electric Corporation

■ GM90PS POWER SUPPLY MODULE SPECIFICATIONS

Unit: mm

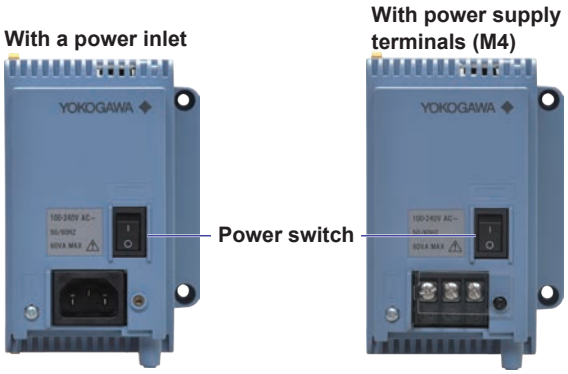

GM90PS-1N1[]0

- Rated supply voltage: 100 to 240 VAC
- Allowable supply voltage: 90 to 264 V AC
- Power frequency: 50 Hz ± 2%, 60 Hz ± 2%
- Power switch: Available
- Terminal type: Inlet or M4 screw terminal
- Allowable interruption time: Less than 1 cycle of the power supply frequency
- Insulation resistance: Between the power supply terminal and earth: 20 MΩ or higher at 500 V DC
- Withstand voltage:
  Between the power supply terminal and earth:
  3000 V AC (50/60 Hz) for 1 minute
- Grounding: Be sure to set a low grounding resistance.
- Material: Polycarbonate
- Color: Smoke blue (Munsell 4.1PB 6.0/4.5 equivalent)
- External Dimensions: 56.8(W)×135(H)×107.1(D) mm
- Weight: Approx. 0.55kg

GM90PS-1N2W0

- Rated supply voltage: 12 to 28 V DC
- Allowable supply voltage: 10 to 32 V DC
- Power frequency: 50 Hz ± 2%, 60 Hz ± 2%
- Power switch: Available
- Terminal type: M4 screw terminal
- Allowable interruption time: 2 ms or less
- Insulation resistance: Between the power supply terminal and earth: 20 MΩ or higher at 500 V DC
- Withstand voltage:
  Between the power supply terminal and earth:
  1000 V AC (50/60 Hz) for 1 minute
- Grounding: Be sure to set a low grounding resistance.
- Material: Polycarbonate
- Color: Smoke blue (Munsell 4.1PB 6.0/4.5 equivalent)
- External Dimensions: 56.8(W)×135(H)×107.1(D) mm
- Weight: Approx. 0.55kg

All Rights Reserved. Copyright © 2014, Yokogawa Electric Corporation

● External Dimensions

Unit: mm [approx. inch]

With a power inlet

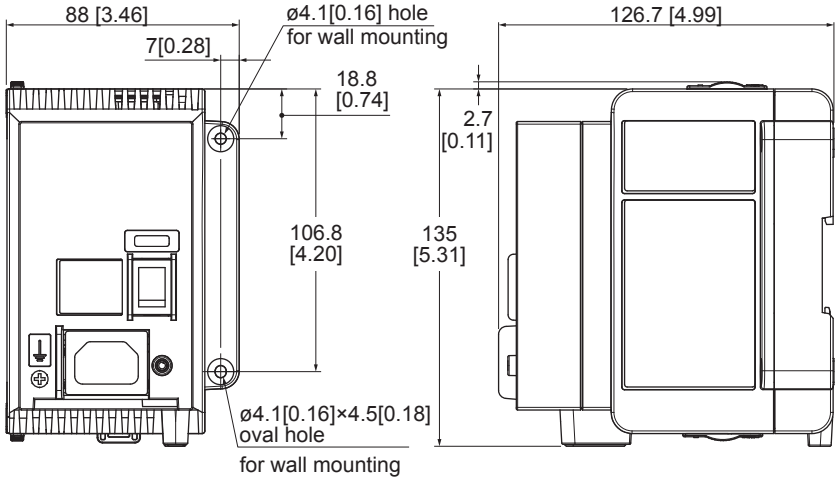

With power supply terminals (M4)

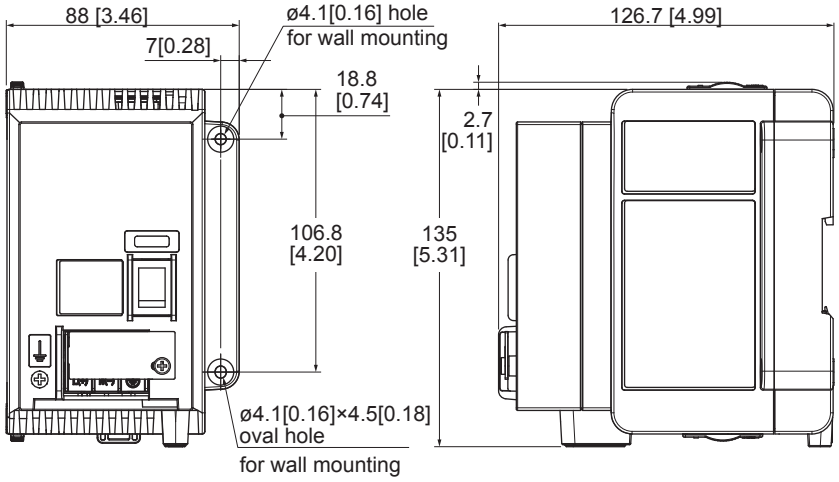

Rear view

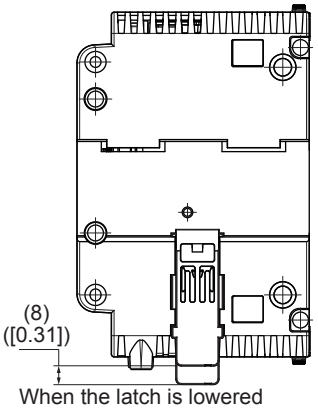

Rear view

All Rights Reserved. Copyright © 2014, Yokogawa Electric Corporation

■ UNIT EXTERNAL DIMENSIONS

Unit: mm [approx. inch]

● Main unit (single unit)

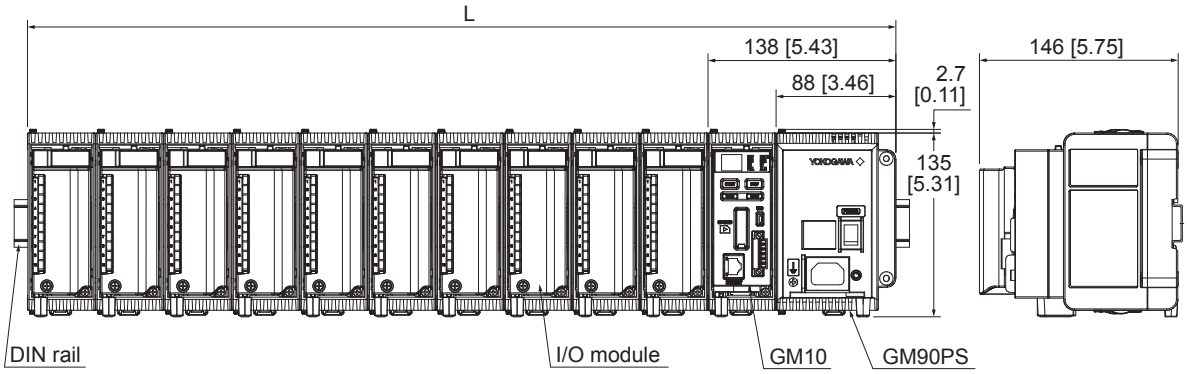

● Main unit (multi unit)

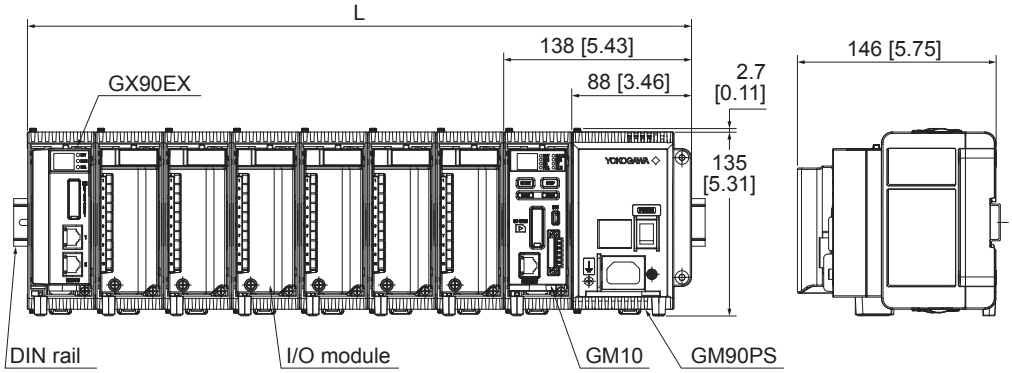

● Sub unit

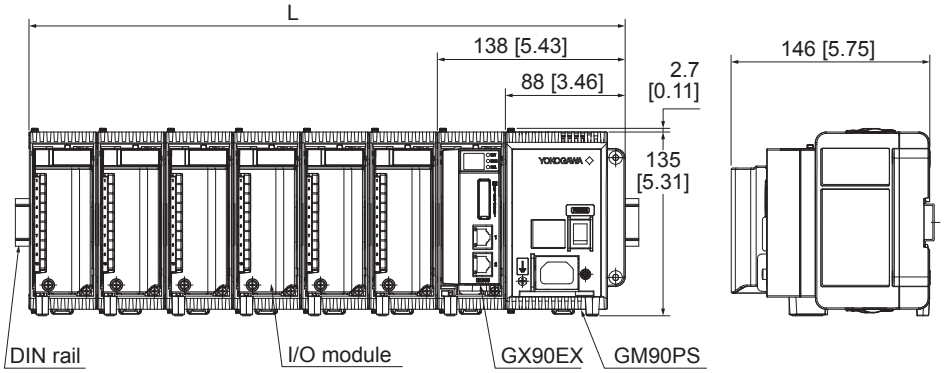

Unit: mm
approx. inch

Unit types	Maximum width for each input / output module to be connected: L (mm)										
	0	1	2	3	4	5	6	7	8	9	10
Main unit (single unit)	138	188	238	288	338	388	438	488	538	588	638
	5.43	*7.40*	*9.37*	*11.34*	*13.31*	*15.28*	*17.24*	*19.21*	*21.18*	*23.15*	*25.12*
Main unit (multi unit)	188	238	288	338	388	438	488				
	7.40	*9.37*	*11.34*	*13.31*	*15.28*	*17.24*	*19.21*				
Sub unit (multi unit)	138	188	238	288	338	388	438				
	5.43	*7.40*	*9.37*	*11.34*	*13.31*	*15.28*	*17.24*				

All Rights Reserved. Copyright © 2014, Yokogawa Electric Corporation

● Vertical Mounting Dimensions for DIN Rail Mounting

Unit: mm [approx. inch]

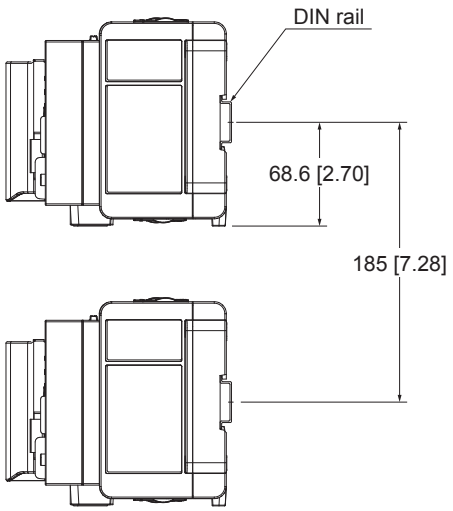

● Wall Mount Dimensions

Unit: mm [approx. inch]

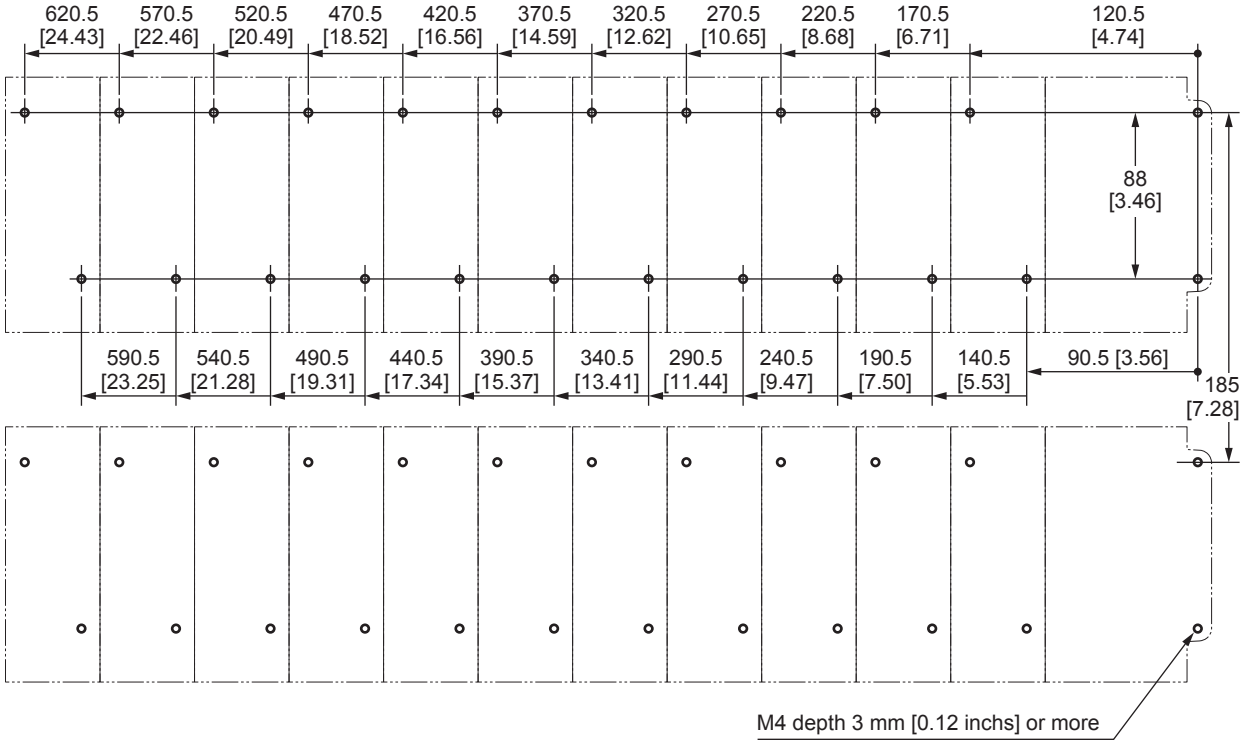

Tolerance: ±0.3 [±0.012]

All Rights Reserved. Copyright © 2014, Yokogawa Electric Corporation

■ APPLICATION SOFTWARE

SMARTDAC+ STANDARD
- Universal Viewer
- Hardware Configurator
- IP Address Configurator

Download the latest version of the software from the following URL.

www.smartdacplus.com/software/en/

PC System Requirements

Operating system:

Item	Specifications
Windows 10	Home (32-bit and 64-bit editions)
	Pro (32-bit and 64-bit editions)
	Enterprise LTSB (32-bit and 64-bit editions)
	Enterprise LTSC (32-bit and 64-bit editions)
Windows 11	Home (64-bit edition)
	Pro (64-bit edition)
	Enterprise (64-bit edition)

Processor and main memory:

OS	Processor and main memory
Windows 10	32-bit edition: Intel Core2 Duo E6300 or faster x64 or x86 processor. At least 2 GB. 64-bit edition: Intel Core2 Duo E6300 or faster x64 or x86 processor. At least 2 GB.
Windows 11	Intel Core i5 or faster, and 8th generation or later Intel processor.

Web browser:
Supported browser: Microsoft Edge, Google Chrome

Hard disk:
100 MB or more free space for Windows 10
64 GB or more free space for Windows 11
(depending on the amount of data, you may need more memory).

Display:
A video card that is recommended for the OS and a display that is supported by the OS, has a resolution of 1024 x 768 or higher, and that can show 65,536 colors (16-bit, high color) or more.

● Universal Viewer

The universal viewer can display the following data generated by data loggers or recorders on the screen and print it out on the printer.
- Display data file
- Event data file
- Report data file
- Manual sampled data file

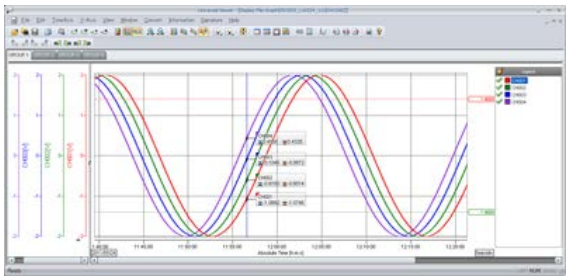

- Viewer function: Waveform display, digital display, circular display, list display, report display, operation log display, waveform superimposed display, etc.
- Data conversion: File conversion to Excel and ASCII format
- Signature function: Signing measurement data files is possible.

● Hardware Configurator

- Offline setting on Web browser
  Settings can be configured from Microsoft Edge and Google Chrome.

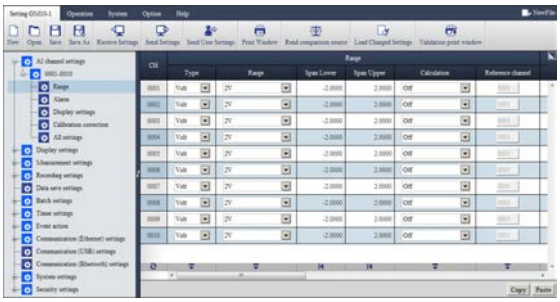

● IP Address Configurator

- GM10 IP address assignment
  Edit the GM10's host name, IP address, DNS server, domain name, domain suffix, and so on as well as register the host name to a DNS server.
- GM10 search Search for GMs in the same network segment and list them.

All Rights Reserved. Copyright © 2014, Yokogawa Electric Corporation

■ MODEL AND SUFFIX CODES

● GM10 Model and Suffix Codes

Model	Suffix code			Optional code	Description
GM10					Data Acquisition Module for SMARTDAC+ GM
Type	**-1**				Standard (Max. measurement channels: 100)
	-2				Large memory (Max. measurement channels: 500)
Area		**E**			General *12
—			**0**		Always zero
Optional features				**/AH**	Aerospace heat treatment
				/AS	Advanced security function *5
				/BT	Multi-batch function *4
				/C3	RS-422/485
				/C8	Bluetooth
				/E1	EtherNet/IP communication (PLC communication protocol) *7
				/E2	WT communication*1
				/E3	OPC-UA sever
				/E4	SLMP communication (Mitsubishi PLC) *8
				/LG	Log scale
				/MC	Communication channel function *9 *11
				/MT	Mathematical function (with report function) *2 *3
				/PG	Program control function *6
				/WH	Integration bar graph function *10

*1 If you specify WT communication, you must also specify the communication channel function (/MC option).
*2 Optional code /MT (MATH) required if using the GX90XD's or GX90WD's pulse input.
*3 Optional code /MT (MATH) required if using the GX90XP's pulse integration.
*4 When the advanced security function is set to ON, the scan interval is set to 100 ms or longer. In addition, the dual interval function and PID modules cannot be used.
*5 When the multi-batch function is set to ON, the scan interval is set to 500 ms or longer. In addition, the dual interval function cannot be used.
*6 A PID control module is required to use the program control function.
*7 If you want to write from a PLC to the GM via EtherNet/IP communication, a communication channel (/MC) is required.
*8 If you want to read PLC data to communication channel via SLMP communication, a communication channel (/MC) must be specified.
*9 A communication channel (/MC) is required to configure the Modbus client function and for other devices to write to the GM Modbus server.
*10 If you specify /WH option, you must also specify the communication channel function (/MC option) and the mathematical function (/MT option).
*11 A communication channel (/MC) is required to use the profile function.
*12 The Display language is selectable from English, German, French, Italian, Russian, Korean, Simplified Chinese, Traditional Chinese, Japanese.

● GM90PS Model and Suffix Codes

Model	Suffix Code					Optional code	Description
GM90PS							Power Supply Module for SMARTDAC+ GM
Type	**-1**						Always -1
Area		**N**					General
Supply voltage			**1**				100-240 V AC
			2				12-28 V DC *1
Power supply connection				**D**			Power inlet with UL/CSA cable
				F			Power inlet with VDE cable
				H			Power inlet with GB cable
				N			Power inlet with NBR cable
				Q			Power inlet with BS cable
				R			Power inlet with AS cable
				W			Screw terminal (M4) (without power cable)
—					**0**		Always zero
Optional features						**/WH**	For Integration bar graph function *2

*1 Only W (Screw terminal (M4)) is available for the power supply connection.
*2 When using with GM10 (/ WH option), it is necessary to specify the / WH option (for integrated bar graph function) for GM90PS.

● GM90MB Model and Suffix Codes

Model	Suffix Code			Description
GM90MB				Module Base for SMARTDAC+ GM
—	**-01**			Always -01
Area		**N**		General
—			**0**	Always zero

■ ORDERING INFORMATION

Model, suffix code, and optional codes, when necessary, are required to be specified.

Note 1: For modules other than GM90PS (power supply module), a GM90MB (module base) is required for each module.
Note 2: Before ordering, read “MODEL SELECTION GUIDE” on page 25 and “Restrictions and Cautions” on page 27.

■ STANDARD ACCESSORIES

Model	Standard accessory name	Qty
GM10	SD card (1 GB)	1
GM90PS	Connector cover	1
	Power cable (depends on the suffix code of the power supply connection)	1
	Interconnect screw (M3)	4
GM90MB	Interconnect screw (M3)	4

All Rights Reserved. Copyright © 2014, Yokogawa Electric Corporation

■ OPTIONAL ACCESSORIES (SOLD SEPARATELY)

Product	Model/part no.
SD card (1 GB)	**773001**
Shunt resister for M3 terminal (250 Ω ± 0.1 %)	**415940**
Shunt resister for M3 terminal (100 Ω ± 0.1 %)	**415941**
Shunt resister for M3 terminal (10 Ω ± 0.1 %)	**415942**
Shunt resister for clamp terminal (250 Ω ± 0.1 %)	**438920**
Shunt resister for clamp terminal (100 Ω ± 0.1 %)	**438921**
Shunt resister for clamp terminal (10 Ω ± 0.1 %)	**438922**
Dummy cover	**B8740CZ**
Validation Documents (For /AS option) *1	**773230**

*1 Provision of Validation Documents A license sheet containing the license key required for installation is provided. Download the validation document from the following URL.
http://www.smartdacplus.com/software/en/

Related Product (Sold Separately)

Model	Description
GA10	Data Logging Software
	OS: Windows 10/11 Windows Server 2016/2019/2022
CE10	Cloud Equipment/Quality Prediction Tool
	OS: Windows 10/11
OE10	Offline Equipment/Quality Prediction Tool
	OS: Windows 10/11

Test Certificate (QIC, sold separately)

QIC is available for each model.

User's Manual

Product user's manuals can be downloaded or viewed at the following URL. To view the user's manual, you need to use Adobe Acrobat Reader (the latest version recommended).

URL: www.smartdacplus.com/manual/en/

Trademarks

The TCP/IP software used in this product and the document for that TCP/IP software are based in part on BSD networking software, Release 1 licensed from The Regents of the University of California.
SMARTDAC+ is a registered trademark or trademark of Yokogawa Electric Corporation.
Microsoft, MS, Microsoft Edge and Windows are trademarks or registered trademarks of Microsoft Corporation in the United States and/or other countries.
Intel Core is a trademark of Intel Corporation in the United States and/or other countries.
Modbus is a registered trademark of Schneider Electric.
Kerberos is a trademark of MIT.
Bluetooth is a trademark or registered trademark of Bluetooth SIG Inc.
Google Chrome is a trademark or registered trademark of Google LLC.
Other company names and product names appearing in this document are registered trademarks or trademarks of their respective holders.
The company and product names used in this manual are not accompanied by the registered trademark or trademark symbols (® and ™).

All Rights Reserved. Copyright © 2014, Yokogawa Electric Corporation

■ MODEL SELECTION GUIDE

Selection of the system configuration and GM10 type

Model-Type	Internal memory	System Configuration	I/O channels
GM10-1	500MB	Single Unit	0 to 100ch
		Multi Unit	0 to 100ch
GM10-2	1.2GB	Single Unit	0 to 100ch
		Multi Unit	0 to 420ch

I/O Modules

Model	Suffix code	Product name	Description	Number of channels	Measurement interval (shortest)
GX90XA	-10-C1N-□N	Analog Input Module	Current (mA) input: DC current (mA), DC current standard signal (4-20 mA)	10	100 ms
	-10-L1N-□N		Low withstand voltage relay: DC voltage, standard signal, thermocouple (TC), DI (voltage, contact), and DC current (by adding an external shunt resistor)		500 ms
	-10-U2N-□N		Universal: DC voltage, standard signal, thermocouple (TC), resistance temperature detector (RTD), DI (voltage, contact), and DC current (by adding an external shunt resistor)		100 ms
	-10-T1N-□N		Electromagnetic relay: DC voltage, standard signal, thermocouple (TC), DI (voltage, contact), and DC current (by adding an external shunt resistor)		1 s
	-10-V1N-□N		High withstand voltage: DC voltage, standard signal, thermocouple (TC), DI (voltage, contact), and DC current (by adding an external shunt resistor)		100 ms
	-04-H0N- □ N		High-speed universal: DC voltage, standard signal, thermocouple, resistance temperature detector (RTD), DI (voltage, contact), DC current (when an external shunt resistor is connected)	4	1 ms
	-06-R1N- □ N		4-wire RTD, 4-wire resistance	6	100 ms
GX90XD	-16-11N-□N	Digital Input Module	Remote control input, pulse input	16	100 ms
GX90XP	-10-11N-□N	Pulse Input Module	Pulse input (flow sum and the like)	10	100 ms
GX90YD	-06-11N-3N	Digital Output Module	Alarm output, etc	6	100 ms (update interval)
GX90WD	-0806-01N-3N	Digital Input/Output Module	Remote control input, pulse input	DI: 8 DO: 6	100 ms
GX90XP	-10-11N-□N	Pulse Input Module	Pulse input (flow sum and the like)	10	100 ms
GX90YA	-04-C1N-□N	Analog Output Module	Transmission output, manual output	4	100 ms(update interval)
GX90UT	-02-11N-3N	PID Control Module	Control of temperature, flow, pressure etc.	2 loops	100 ms(update interval)

Single unit system configuration (up to 100 channels)

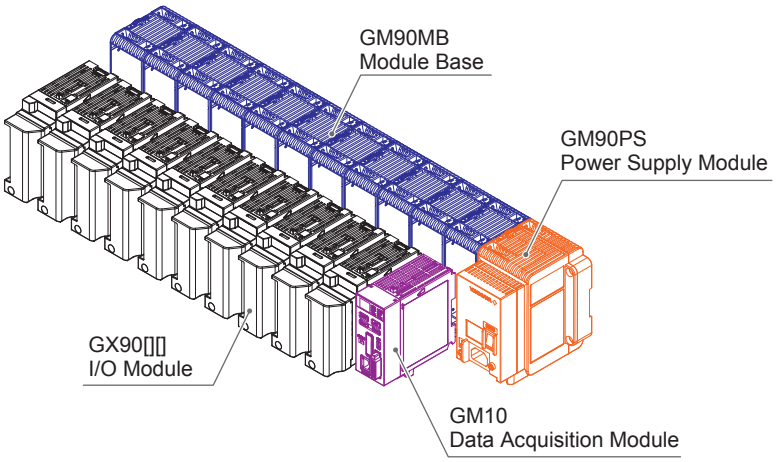

Configuration example (maximum)
GM10: 1
GM90PS: 1
GX90[][]: 10
GM90MB: 11

9	8	7	6	5	4	3	2	1	0	<---Slot number	
GM90MB	GM90MB	GM90MB	GM90MB	GM90MB	GM90MB	GM90MB	GM90MB	GM90MB	GM90MB	GM90MB	GM90PS
GX90[][]	GX90[][]	GX90[][]	GX90[][]	GX90[][]	GX90[][]	GX90[][]	GX90[][]	GX90[][]	GX90[][]	GM10	

All Rights Reserved. Copyright © 2014, Yokogawa Electric Corporation

Multi unit system configuration (up to 420 channels)

Main unit

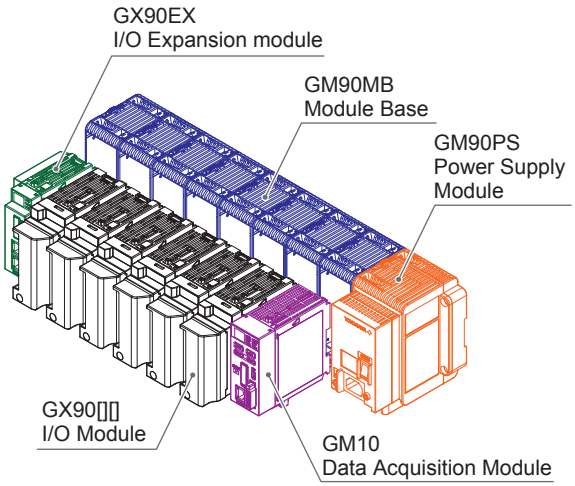

Sub unit

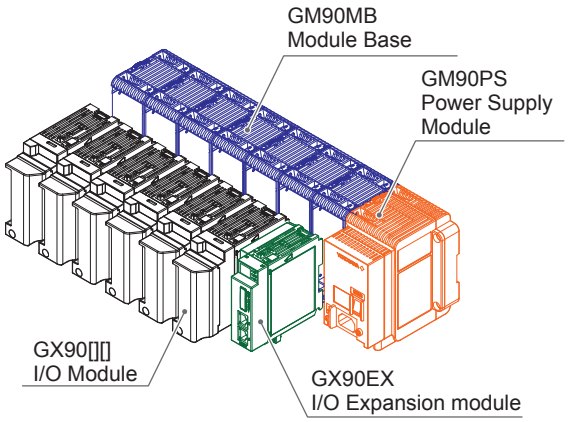

Main unit configuration example (maximum)
GM10: 1
GM90PS: 1
GX90[][]: 6
GX90EX: 1
GM90MB: 8

Sub unit configuration example (maximum)
GM90PS: 6
GX90[][]: 36
GX90EX: 6
GM90MB: 42

	5	4	3	2	1	0	<---Slot number	
Main Unit (Unit 0)	GM90MB	GM90MB	GM90MB	GM90MB	GM90MB	GM90MB	GM90MB	GM90PS
	GX90EX	GX90[][]	GX90[][]	GX90[][]	GX90[][]	GX90[][]	GM10	
Sub Unit (Unit 1)	GM90MB	GM90MB	GM90MB	GM90MB	GM90MB	GM90MB	GM90MB	GM90PS
	GX90[][]	GX90[][]	GX90[][]	GX90[][]	GX90[][]	GX90[][]	GX90EX	
Sub Unit (Unit 2)	GM90MB	GM90MB	GM90MB	GM90MB	GM90MB	GM90MB	GM90MB	GM90PS
	GX90[][]	GX90[][]	GX90[][]	GX90[][]	GX90[][]	GX90[][]	GX90EX	
Sub Unit (Unit 3)	GM90MB	GM90MB	GM90MB	GM90MB	GM90MB	GM90MB	GM90MB	GM90PS
	GX90[][]	GX90[][]	GX90[][]	GX90[][]	GX90[][]	GX90[][]	GX90EX	
Sub Unit (Unit 4)	GM90MB	GM90MB	GM90MB	GM90MB	GM90MB	GM90MB	GM90MB	GM90PS
	GX90[][]	GX90[][]	GX90[][]	GX90[][]	GX90[][]	GX90[][]	GX90EX	
Sub Unit (Unit 5)	GM90MB	GM90MB	GM90MB	GM90MB	GM90MB	GM90MB	GM90MB	GM90PS
	GX90[][]	GX90[][]	GX90[][]	GX90[][]	GX90[][]	GX90[][]	GX90EX	
Sub Unit (Unit 6)	GM90MB	GM90MB	GM90MB	GM90MB	GM90MB	GM90MB	GM90MB	GM90PS
	GX90[][]	GX90[][]	GX90[][]	GX90[][]	GX90[][]	GX90[][]	GX90EX	

All Rights Reserved. Copyright © 2014, Yokogawa Electric Corporation

■ RESTRICTIONS AND CAUTIONS

Limit to the number of modules and number of channels in the system

System	Measurement mode	Maximum Number of Connections	Maximum Number of Channels			
		Module	I/O	Communication	Math	Report
GM10-1	Normal	10	100	300	100	60
	High speed	8	32			
	Dual interval	10	50	150	50	30
GM10-2	Normal	42	500	500	200	60
	High speed	8	32			
	Dual interval	42	250	250	100	30

Limit to the number of modules per unit

The following table shows the limits when the module specified under Module is connected to the system. The system will not operate if the limit is exceeded.

Module	Single unit system	Multi unit system
	Main unit	Main unit
When GX90XA-10-T1 is included	Up to 8	No limit
When GX90XA-04-H0 is included	Up to 8	No limit
When GX90XA-04-H0 and GX90YA are included	Up to 7	No limit
When GX90UT is included	Up to 5	Up to 5

Limit to the Number of Sub Units

- Up to six units can be connected.
- Connection is not possible if the measurement mode is set to High speed.

Limit on Modules

- Up to 10 modules consisting of GX90YD, GX90WD, and GX90UT can be connected to the system.
- One GX90WD module can be connected to each unit.
- Two GX90YA modules can be connected to the main unit and to the sub unit.
- Up to 10 GX90YA modules can be connected to a GM10-1 system and up to 12 to a GM10-2 system.
- If the measurement mode is High speed, a GX90XD or GX90WD module can be connected to the system.
- If the measurement mode is High speed, only GX90XA-04-H0 (high-speed AI), GX90XD (DI), GX90WD (DIO), and GX90NW are detected.
  DI and DIO are fixed to remote mode. Measurement and recording are not possible.
- If the measurement mode is Dual interval, GX90UT is not detected.
- Up to 3 GX90UT modules can be connected to a GM10-1 system and up to 10 to a GM10-2 system.

Restrictions when using the GX90NW network module (protocol: PROFINET)

- One module of GX90NW can be used for the main unit (single unit) only. It must be connected to the leftmost slot when facing the front of the main unit.
- The GX90NW cannot be used at the same time as the expansion module (GX90EX).
- When including the GX90XA or GX90YA, you can mount up to 6 modules including the GX90NW.

Notes on Module Installation

- If you want to use reference junction compensation on a thermocouple input of a GX90XA-10-U2, GX90XA-10-L1, GX90XA-10-T1 or GX90XA-10-V1, do not connect the following module to the right of the GX90XA module as seen from the front. Doing so may cause the reference junction compensation accuracy to deviate from the guaranteed range.
  GX90XA-10-C1 (for mA), GX90XA-04-H0 (high-speed AI), GX90YA, GX90WD, GX90UT
- If the maximum number of I/O channels are assigned and the last channel is assigned to an intermediate channel of a connected I/O module, that module and subsequent modules will not be identified.

GM10-1

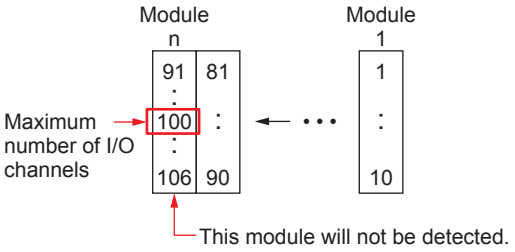

- If you want to use the DI of a GX90XD or GX90WD, only a single module installed in the GM main unit can be used.

All Rights Reserved. Copyright © 2014, Yokogawa Electric Corporation

Limit to the Number of Measurement Channels

There is a limit to the number of channels that can measure at scan intervals shorter than 100 ms.

• When the measurement mode is set to High speed.

GM10-1

Channel	1 ms	2 ms	5 ms	10 ms	20 ms	50 ms
I/O	1	2	5	10	20	32
Math	1	2	5	10	20	50
Communication	3	6	15	30	60	150
Report	1	2	5	10	20	50

GM10-2

Channel	1 ms	2 ms	5 ms	10 ms	20 ms	50 ms
I/O	5	10	25	32	32	32
Math	2	4	10	20	40	100
Communication	5	10	25	50	100	250
Report	2	4	10	20	40	60

• When the measurement mode is set to Dual interval.

GM10-1

Channel	1 ms	2 ms	5 ms	10 ms	20 ms	50 ms
I/O	-----	-----	5	10	20	32
Math	-----	-----	2	5	10	25
Communication	-----	-----	7	15	30	75
Report	-----	-----	2	5	10	25

GM10-2

Channel	1 ms	2 ms	5 ms	10 ms	20 ms	50 ms
I/O	5	10	25	32	32	32
Math *1	1	2	5	10	20	50
Communication *1	2	5	12	25	50	125
Report *2	1	2	5	10	20	30

*1 Channels that can be used only on one of the two scan groups. They operate at the scan interval specified in the master scan group.

*2 Can be specified from 30 channels.

Limit to the Number of Recording Channels in Each Measurement Mode

I/O channel + math channel + communication channel

System	Measurement mode	1ms	2ms	5ms	10ms	20ms	50ms	100ms	200ms	500ms	1 s or more
GM10-1	Normal	-----	-----	-----	-----	-----	-----	100	200	500	500
	High speed	2	4	10	20	40	100	100	200	500	500
	Dual interval	-----	-----	5	10	20	50	100	100	250	250
GM10-2	Normal	-----	-----	-----	-----	-----	-----	500	500	1000	1000
	High speed	10	20	50	100	150	150	200	500	1000	1000
	Dual interval	5	10	25	40	50	50	100	200	600	600

Dual Interval Searching of Universal Viewer

Recording mode	Link dual interval waveform *1	Show dual interval waveform integrated link view *2
Free + Free	✓	✓
Free + Trigger (single-shot, repeated)	—	—
Trigger (single-shot, repeated) + Trigger (single-shot, repeated)	—	—

*1 Link dual interval waveform: A function that searches a folder for and displays the file that forms a pair with the displayed file.

*2 Show dual interval waveform integrated link view: A function that displays from the result of Search Open one of the files that forms a pair and displays both trends when it is clicked.

Program Pattern Setting (/PG option)

Hardware Configurator is required for setting program patterns. You cannot set using the Web application.

All Rights Reserved. Copyright © 2014, Yokogawa Electric Corporation

■ LIABILITY

YOKOGAWA assumes no liability to any party for any loss or damage, direct or indirect, caused by lost or missing data due to interrupted wireless or cable communication, or the use of the product outside the design, specifications, or handling conditions.
Except for the matters stipulated in the warranty of this product, YOKOGAWA does not guarantee any measurement data and operation taken when there is a failure, erroneous operation, and problem with the product.

■ Basic Conditions and Individual Contracts at the Time of Purchase

The warranty for this product is defined in the basic conditions and individual contracts at the time of purchase.

The individual conditions are as follows.

- **Validation**
  Yokogawa does not guarantee the final outcome of validation work even if there is a defect in the product.

  For the warranty of validation services, please contact the company that performed the validation work.

- **Warranty period of firmware**
  The firmware warranty period is one year.

  Please refer to the following URL for the procedure to update the firmware and the method to download the firmware.

  https://partner.yokogawa.com/global/

All Rights Reserved. Copyright © 2014, Yokogawa Electric Corporation
Subject to change without notice.