FCI-D04A4P-AP8X-H1141
Flow Monitoring – Inline Sensor with Integrated Processor

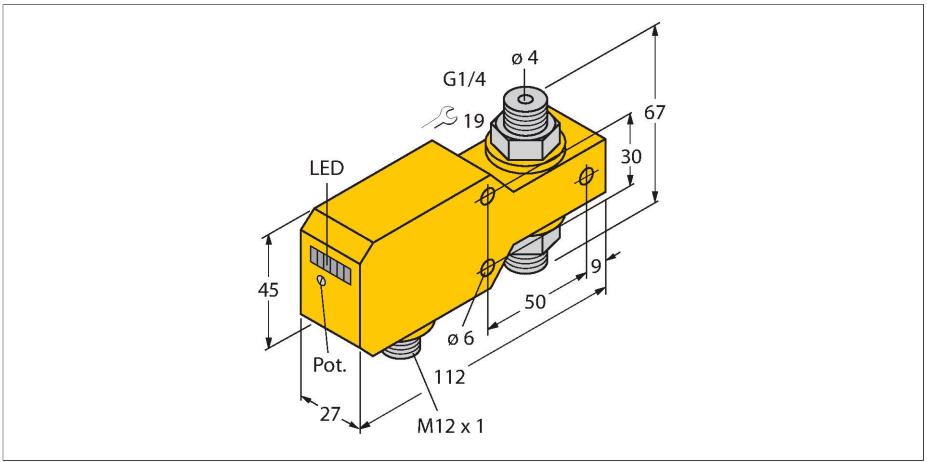

Technical data

ID	6870640
Type	FCI-D04A4P-AP8X-H1141
Mounting	**Inline sensor**
Flow operating range	0.01…1 l/min
Stand-by time	5…15 s
Switch-on time	0.5…1 s
Switch-off time	0.5…1 s
Temperature gradient	≤ 400 K/min
Medium temperature	0…+80 °C
Ambient temperature	0…+60 °C
Electrical data	
Operating voltage U_B	19.2…28.8 VDC
Current consumption	≤ 50 mA
Output function	PNP, NO contact
Rated operational current	0.2 A
Voltage drop at I_e	≤ 1.5 V
Short-circuit protection	yes
Reverse polarity protection	yes
Protection class	IP67
Mechanical data	
Design	Inline
Housing material	Plastic, PBT
Sensor material	Stainless steel, 1.4571 (AISI 316Ti)
Max. tightening torque of housing nut	30 Nm

Features

- Flow sensor for liquid media
- Calorimetric principle
- Adjustment via potentiometer
- LED band
- Operating range 0.01…1 l/min
- DC 3-wire, 19.2…28.8 VDC
- NO contact, PNP output
- Connector device, M12 × 1

Wiring diagram

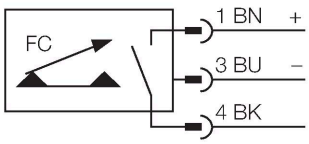

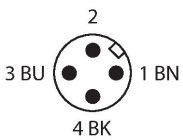

Functional principle

The function of the inline flow sensors is based on the thermo-dynamic principle. Heat is generated in a measuring tube and absorbed by the flowing medium. The transported heat loss is thus a measure of the flow speed. Thus TURCK's wear-free flow sensors reliably monitor the flow of gaseous and liquid media. A low pressure drop and

FCI-D04A4P-AP8X-H1141| 01/09/2026 22-28 | technical changes reserved

Technical data

Electrical connection	Connector, M12 × 1
Process Pressure	20 bar
Process connection	G 1/4"
Switching state	LED chain, Green/yellow/red
Flow state display	LED chain
Indication: Drop below setpoint	LED Red
Indication: Setpoint reached	LED Yellow
Indication: Setpoint exceeded	4 × LEDs Green
Tests/approvals	
Approvals	cULus
UL registration number	E210608

fast response to flow rate variations are the outstanding features of these devices.