SEE MORE AT SORInc.com

Request Quote

MEASUREMENT AND CONTROL

Pressure and Vaccum Switches for Process Applications

SOR® Pressure Switches

are rugged, field-mounted instruments. The pressure sensing element of the SOR pressure switch is a force-balance, piston-actuated assembly. The sensing element is sealed by a flexible diaphragm and a static o-ring. A wide selection of wetted parts materials for media compatibility and containment are available. A metal diaphragm may be welded to the pressure port for certain applications, thereby eliminating the o-ring.

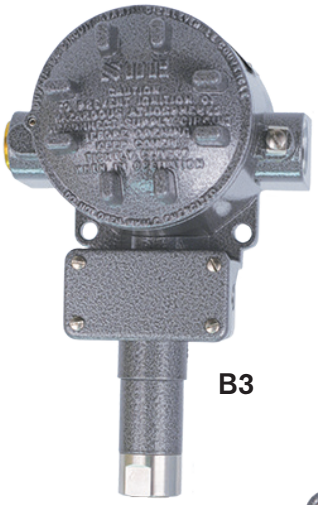

B3

Application Information

The SOR pressure switches in this catalog are suitable for a variety of process applications. Basic models with standard wetted parts are normally suitable for air, oil, water and non-corrosive processes. See the Quick Selection Guide on pages 4 and 5. Specific application requirements can normally be met by selecting optional components, such as switching elements, diaphragm systems and pressure ports. See How to Order on page 3. Certain applications may require customized specials. Consult the SOR representative in your area or the factory.

NN

This catalog describes switches that are:

- General Purpose
- Weatherproof
- Conventional Explosion Proof

Other specific types of switches available through your SOR representative are:

- Hermetically Sealed (for hazardous locations)
- Pivot Seal (for high shock pressures and cycle rates)
- Differential Pressure
- Temperature (remote and direct mount)
- Electronic and Mechanical Level
- Electronic Pressure

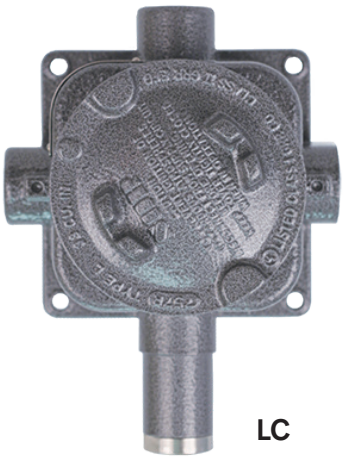

LC

Features and Benefits

Complete Product Line

- Standard models and customized specials cover pressure ranges from 30 inches Hg VAC to 4000 psi.

Robust Construction

- Rugged, high-cycle rate tolerance, long life, not critical to vibration, high overrange and proof pressures, excellent corrosion resistance to hostile environments.
- Enclosure ratings: NEMA 1, 4, 4X, 7, or 9 available.
- Ingress protection rating up to IP66.

Instrument Quality

- High resolution of set points, high repeatability, narrow dead band, negligible temperature effect.

Wetted Parts

- Wide selection materials, process connection configurations and sizes. Optional “fire-safe” pressure sensor.

Snap-Action Electrical Switching

- Wide selection UL Listed and CSA Certified switching elements for AC and DC service. Optional “hermetically sealed” capsule for hazardous and hostile environments.

Field Adjustable

- Self-locking adjustment, no special tools required. No-charge factory calibration.

Cost Effective

- Simple and fast installation without special tools, long service life, no required periodic service or spare parts.

Agency Listings/Certification

- Select models with ATEX, IECEx, CSA, FM, INMETRO, TIIS and UL.
- Meets most code and customer requirements.

Safety Certified to IEC 61508 (SIL)

- SOR products are certified to IEC 61508 for non-redundant use in SIL1 and SIL2 Safety Instrumented Systems for most models. For more details or values applicable to a specific product, see the Safety Integrity Level Quick Guide (Form 1528).

Shock/Vibration

- Select models tested to MIL-S-901D (Navy) shock test.
- Select models tested to MIL-S-167 vibration test.

Built-In Quality

- Rigid quality standards maintained from raw material to finished product.

Delivery

- Routine shipments 7 to 10 working days. Emergency shipments via same day air.

Service

- Factory sales engineers and area SOR representatives provide effective and prompt worldwide service.

Warranty

- 3 years from date of manufacture.

Form 216 (07.26) ©SOR Inc.

Application Information

SOR pressure switches in this catalog are suitable for a wide variety of continuous pressure applications. Specific application requirements can normally be met by selecting optional components, such as, switching elements, diaphragm systems and pressure ports. Certain applications may require customized specials. Consult the SOR representative in your area or the factory.

Quick Selection Guide

Basic SOR pressure switches with standard wetted parts are normally suitable for air, oil, water and non-corrosive processes.

- Refer to the **Quick Selection Guide** on pages 4 and 5 for a basic model number. Corrosive service and particular customer requirements may require optional components.
- Refer to the **Engineered to Order Model Tree** section below to build a customized model number with optional components, such as: switching elements, diaphragm systems, pressure ports and accessories.

Engineered to Order Model Tree

Use to configure and order a customized product for your application.

- You must select a designator for each component except Accessories.
- Reference tables, charts and additional information is provided throughout the catalog to help you make your selections. See pages noted in the tree.

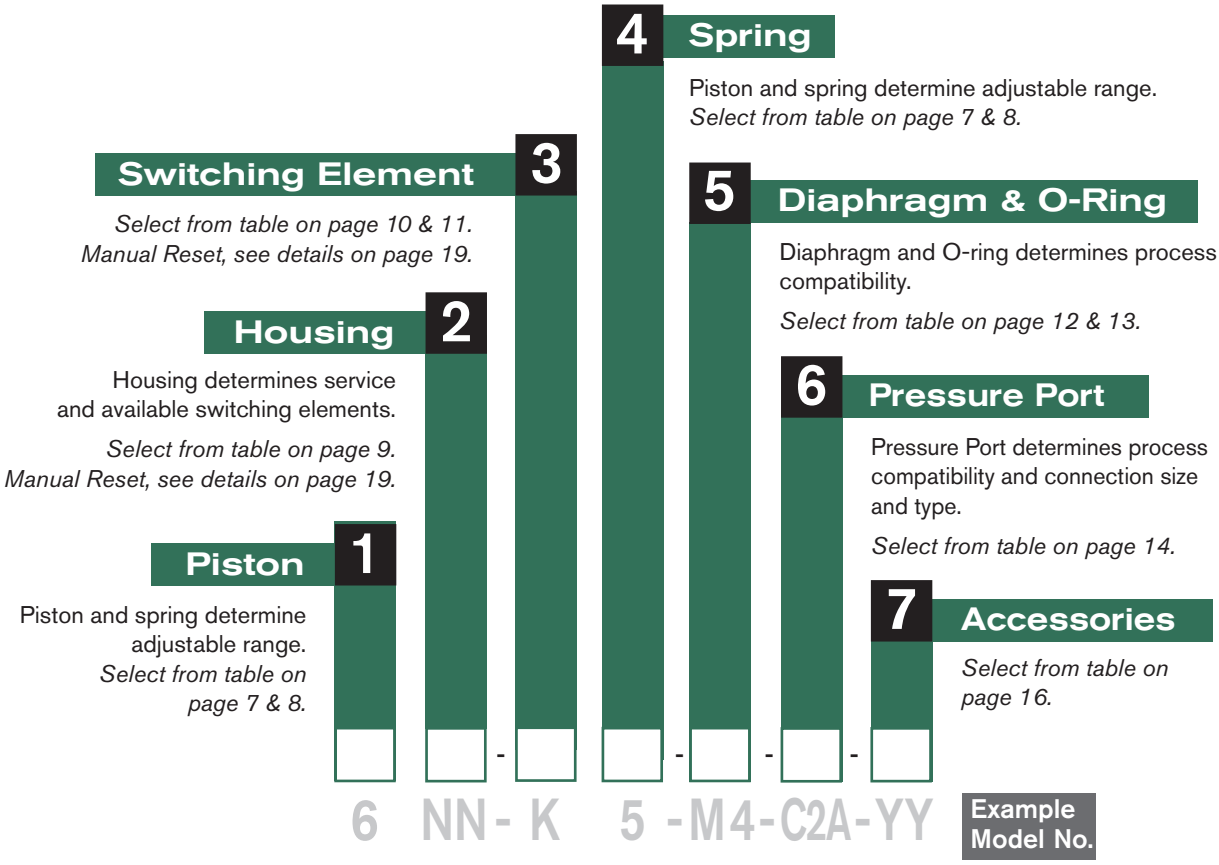

Pressure and Vacuum Switches

Quick Selection Guide - Pressure

Basic SOR pressure switches with standard wetted parts are normally suitable for air, oil, water and non-corrosive processes. Corrosive service and particular customer requirements may require optional components. Refer to How to Order on page 3 to locate optional components, such as, housing, switching elements, diaphragm systems, pressure ports and accessories. Each position in the model number, except Accessories, must have a designator.

Weatherproof

Explosion Proof

Weatherproof Model Number	Adjustable Range (increasing pressure) psi (in. wc.)	Typical Dead Band psi (in. wc.)	Explosion Proof Model Number
12NN - N66 - N4 - B1A	(0.6 to 2.5)	(0.4)	12L - N66 - N4 - B1A
12NN - K614 - N4 - B1A	(2.5 to 45.0)	(0.8)	12L - K614 - N4 - B1A
12NN - K2 - N4 - B1A	0.4 to 2.0	0.1	12L - K2 - N4 - B1A
12NN - K4 - N4 - B1A	0.5 to 6.0	0.1	12L - K4 - N4 - B1A
12NN - K5 - N4 - B1A	0.75 to 12	0.1	12L - K5 - N4 - B1A
12NN - K45 - N4 - B1A	1 to 16	0.15	12L - K45 - N4 - B1A
Piston 12	Overrange 200 (psi)		Proof 400 (psi)

Weatherproof

Explosion Proof

Weatherproof Model Number	Adjustable Range (increasing pressure) psi	Typical Dead Band psi	Explosion Proof Model Number
4NN - K2 - N4 - B1A	2 to 8	0.2	4L - K2 - N4 - B1A
4NN - K4 - N4 - B1A	2 to 25	0.3	4L - K4 - N4 - B1A
4NN - K5 - N4 - B1A	3 to 50	0.4	4L - K5 - N4 - B1A
4NN - K45 - N4 - B1A	4 to 75	0.5	4L - K45 - N4 - B1A
Piston 4	Overrange 750 (psi)		Proof 1000 (psi)

Standard Construction

- Housing: NN - aluminum; L - cast iron
- Switching Element: SPDT; N - 10 amps @ 250 VAC; K - 15 amps @ 250 VAC
- Diaphragm & O-ring: N4 - primary (wetted) diaphragm, TCP; o-ring (wetted) Buna-N
- Pressure Port: 1/4" NPT(F); B1A - aluminum

Notes

1. See balance of catalog for construction options.
2. Dead band values are expressed as typical expected at mid-range for a particular model number. See Dead Band Considerations on page 8.
3. Design and specifications subject to change without notice. For latest revision, see sorinc.com.

Form 216 (07.26) ©SOR Inc.

Pressure and Vacuum Switches

Quick Selection Guide - Pressure

Weatherproof

Weatherproof Model Number	Adjustable Range (increasing pressure) psi	Typical Dead Band psi	Explosion Proof Model Number
6NN - K2 - N4 - G1A	7 to 30	0.5	6L - K2 - N4 - G1A
6NN - K3- N4 - G1A	12 to 100	0.9	6L - K3 - N4 - G1A
6NN - K5- N4 - G1A	20 to 180	1.4	6L - K5 - N4 - G1A
6NN - K45- N4 - G1A	25 to 275	1.9	6L - K45 - N4 - G1A
5NN - K3- N4 - G1A	25 to 240	2.2	5L - K3 - N4 - G1A
5NN - K5- N4 - G1A	35 to 375	3.1	5L - K5 - N4 - G1A
5NN - K45- N4 - G1A	45 to 550	3.9	5L - K45 - N4 - G1A
9NN - K4- N4 - G1A	100 to 500	5.3	9L - K4 - N4 - G1A
9NN - K5- N4 - G1A	200 to 1000	9.2	9L - K5 - N4 - G1A
9NN - K45- N4 - G1A	200 to 1750	15	9L - K45 - N4 - G1A
1NN - K45- N4 - G1A	500 to 4000	98	1L - K45 - N4 - G1A
Piston 6, 5 9 1	Overrange 1500 (psi) 2500 5000		Proof 2500 (psi) 6000 6000

Explosion Proof

Standard Construction

- Housing: NN - aluminum; L - cast iron
- Switching Element: SPDT; K - 15 amps @ 250 VAC
- Diaphragm & O-ring: N4 - primary (wetted) diaphragm, TCP; o-ring (wetted) Buna-N
- Pressure Port: 1/4" NPT(F); G1A - 303SS

Notes

1. See balance of catalog for construction options.
2. Dead band values are expressed as typical expected at mid-range for a particular model number. See Dead Band Considerations on page 8.
3. Design and specifications subject to change without notice. For latest revision, see sorinc.com.

Quick Selection Guide - Vacuum

Weatherproof

Weatherproof Model Number	Adjustable Range Vacuum-O-Pressure in. Hg (in. wc)	Typical Dead Band in. Hg (in. wc)	Explosion Proof Model Number
52NN - K116 - M4 - B1A	(20 - 0 - 20)	(0.8)	52L - K116 - N4 - B1A
52NN - K117 - M4 - B1A	(40 - 0 - 40)	(0.9)	52L - K117 - N4 - B1A
54NN - K117 - M4 - B1A	15 - 0 - 15	0.4	54L - K117 - N4 - B1A
54NN - K118 - M4 - B1A	30 - 0	0.6	54L - K118 - N4 - B1A
56NN - K216 - M2 - G1A	30 - 0 - 20	0.8	56L - K216 - M2 - G1A
56NN - K316 - M2 - G1A	30 - 0 - 160	1.1	56L - K316 - M2 - G1A
Piston 52 54 56	Overrange 200 (psi) 750 1500		Proof 400 (psi) 1000 2500

Explosion Proof

Standard Construction

- Housing: NN - aluminum; L - cast iron
- Switching Element: SPDT; K - 15 amps @ 250 VAC
- Diaphragm & o-ring: N4 - primary (wetted) diaphragm, TCP; o-ring (wetted) Buna-N. Piston 56 primary (wetted) diaphragm, 316SS.
- Pressure Port: 1/4" NPT(F); B1A - aluminum; G1A - 303SS

Notes

1. See balance of catalog for construction options.
2. Dead band values are expressed as typical expected at mid-range for a particular model number. See Dead Band Considerations on page 8.
3. Design and specifications subject to change without notice. For latest revision, see sorinc.com.

Pressure and Vacuum Switches

Glossary of Terms

SOR recognizes that there is no industry convention with respect to terminology and definitions pertinent to pressure switches. This glossary applies to SOR pressure switches.

Pressure Switch

A bi-stable electromechanical device that actuates/deactuates one or more electrical switching element(s) at a predetermined discrete pressure/vacuum (set point) upon rising or falling pressure/vacuum.

Adjustable Range

The span of pressure between upper and lower limits within which the pressure switch may be adjusted to actuate/deactuate. It is expressed for increasing pressure.

Set Point

That discrete pressure at which the pressure switch is adjusted to actuate/deactuate on rising or falling pressure. It must fall within the adjustable range and be called out as increasing or decreasing pressure.

Dead Band

The difference in pressure between the increasing set point and the decreasing set point. It is expressed as typical, which is an average with the increasing set point at mid-range for a pressure switch with the standard K switching element. It is normally fixed (non-adjustable).

Fire-Safe

The ability of a welded seal pressure sensor to contain the process at elevated temperatures up to 1900°F at the rated overrange pressure, unsupported by the body of the pressure switch.

Hermetically Sealed

A welded steel capsule with glass-to-metal, factory-sealed electrical leads that isolates the electrical switching element(s) from the environment.

Overrange

The maximum input pressure that may be continuously applied to the pressure switch without causing permanent change of set point, leakage or material failure.

Proof Pressure

The maximum input pressure that may be continuously applied to the pressure switch without causing leakage or catastrophic material failure. Permanent change of set points may occur, or the device may be rendered inoperative.

Repeatability

The ability of a pressure switch to successively operate at a set point that is approached from a starting point in the same direction and returns to the starting point over three consecutive cycles to establish a pressure profile. Repeatability on SOR switches will be smaller than 1% of full scale per ISA/ANSI S51.1.

SPDT Switching Element

Single-Pole, Double Throw (SPDT) has three connections: C — Common, NO — Normally Open and NC — Normally Closed, which allows the switching element to be electrically connected to the circuit in either NO or NC state.

DPDT Switching Element

DPDT is two synchronized SPDT switching elements which actuate together at increasing set point and deactuate together at decreasing set point. Discrete SPDT switching elements allow two independent circuits to be switched; i.e., one AC and one DC.

The synchronization linkage is factory set, and is not field adjustable. Synchronization is verified by connecting test lamps to the switching elements and observing them go "On" simultaneously at actuation and "Off" simultaneously at deactuation.

Form 216 (07.26) ©SOR Inc.

This table is a listing of piston-spring combinations and the corresponding adjustable ranges, dead bands, overrange and proof pressures. Adjustable range is expressed for increasing pressure; the set point must be within the adjustable range. Dead band is expressed as typical. See Dead Band Considerations on page 8.

Piston-Spring Designators	Adjustable Range[4]		Typical Dead Band[1]		Overrange		Proof	
	psi (in. wc)	bar [mbar]	psi (in. wc)	bar [mbar]	psi	bar	psi	bar
12 - 66[2]	(0.6 to 2.5)	[1.5 to 6.2]	(0.4)	[1]	200	14	400	28
12 - 614[3]	(2.5 to 45)	[6.2 to 110]	(0.8)	[2]				
12 - 2	0.4 to 2.0	[30 to 140]	0.1	[6.9]				
12 - 4	0.5 to 6.0	[35 to 415]	0.1	[6.9]				
12 - 5	0.75 to 12	[50 to 830]	0.1	[6.9]				
12 - 45	1 to 16	[70 to 1100]	0.15	[10.3]				
4 - 2	2 to 8	[140 to 550]	0.2	[13.8]	750	50	1000	70
4 - 4	2 to 25	0.14 to 1.7	0.3	[20.7]				
4 - 5	3 to 50	0.2 to 3.5	0.4	[27.6]				
4 - 45	4 to 75	0.3 to 5	0.5	[34.5]				
6 - 2	7 to 30	0.5 to 2	0.5	[34.5]	1500	100	2500	170
6 - 3	12 to 100	0.8 to 7	0.9	[62.1]				
6 - 5	20 to 180	1.4 to 12	1.4	[96.5]				
6 - 45	25 to 275	1.7 to 19	1.9	0.13				
5 - 3	25 to 240	1.7 to 16	2.2	0.15				
5 - 5	35 to 375	2.4 to 26	3.1	0.21				
5 - 45	45 to 550	3.1 to 38	3.9	0.27				
9 - 4[6]	100 to 500	7 to 35	5.3	0.37	2500	170	6000	410
9 - 5[6]	200 to 1000	14 to 70	9.2	0.63				
9 - 45[6]	200 to 1750	14 to 120	15	1.03				
1 - 45[6]	500 to 4000	35 to 275	98	6.76	5000	340	6000	410

1. Dead band values are expressed as typical expected at mid-range with the standard K switching element assembly installed. When optional switching elements are specified, corresponding dead band multipliers shown on pages 8 and 10 must be applied.
2. The 12/66 piston/spring combination is available with the N switching element only.
3. Adjustable range becomes 10 to 45 in. wc whenever switching elements other than K, KA, W, D or M are used.
4. Special ranges may be possible. Consult the factory or the SOR representative in your area.
5. Diaphragms may have an additional effect on dead band. See page 13, Note 9.
6. Diaphragm life may be limited by using T or H switching elements with Numbers 1 and 9 pistons.
7. Metric bar (mbar) values are practical equivalents of the reference English values; not necessarily exact mathematical conversions. This data appears on the product nameplate when metric engineering units are specified.
8. A breather drain (Accessory KK, see page 16) should be specified when low pressure adjustable ranges are used in environments with significant ambient temperature changes.
9. Filled isolators attached to the pressure switch will affect dead band.

Pressure and Vacuum Switches

Step 1 & 4: Piston/Spring

52NN-K116-M4-C2A-YY

This table is a listing of piston-spring combinations and the corresponding adjustable ranges, dead bands, overrange and proof pressures. SOR vacuum switches are compound; they will operate in either vacuum or pressure modes. The adjustable range is expressed from maximum vacuum decreasing to zero gauge and increasing to maximum pressure. Dead band is expressed as typical. See dead band considerations below. The set point must be within the adjustable range. A vacuum switch is generally better suited than a pressure switch for set points very near zero gauge.

Piston-Spring	Adjustable Range[2] (Vacuum - 0 - Pressure)		Typical Dead Band[1] (Vacuum Mode)		Overrange		Proof	
	in. Hg (in. wc)	bar [mbar]	in. Hg (in. wc)	mbar	psi	bar	psi	bar
52 - 116	(20 - 0 - 20)	[50 - 0 - 50]	(0.8)	1.99	200	14	400	28
52 - 117	(40 - 0 - 40)	[100 - 0 - 100]	(0.9)	2.23				
54 - 117	15 - 0 - 15	0.5 - 0 - 0.5	0.4	13.5	750	50	1000	70
54 - 118	30 - 0	1.0 - 0	0.6	20.3				
56 - 216[3]	30 - 0 - 20	1.0 - 0 - 0.7	0.8	27.1	1500	100	2500	170
56 - 316[3]	30 - 0 - 160	1.0 - 0 - 5.4	1.1	37.3				

Notes

1. Dead band values are expressed as typical expected at mid-range with the standard K switching element assembly installed. When optional switching elements are specified, the corresponding dead band multipliers shown below must be applied.
2. Special ranges may be possible. Consult the factory or the SOR representative in your area.
3. Number 56 piston is not available with a "T" micro switch
4. Diaphragms may have an additional effect on dead band. See page 13, Note 9.
5. Metric bar (mbar) values are practical equivalents of the reference English values; not necessarily exact mathematical conversions. This data appears on the product nameplate when metric engineering units are specified.

Dead Band Considerations

1. Dead band values are expressed as typical expected at mid-adjustable range using the standard K switching element. When optional switching elements are specified, corresponding dead band multipliers must be applied.
2. Dead bands are fixed (non-adjustable), except when T or H switching elements are used.
3. Dead band can be adjustable by selecting T or H switching element. (Diaphragm life may be limited when used with Numbers 1 and 9 pistons.)
4. Dead band multipliers must be applied to the typical dead band value shown for piston spring combination in specifications, pages 7 and 8, whenever optional switching elements other than K, KA or W are used.
5. Dead band can be widened by selecting an optional switching element with a multiplier greater than 1.0.
   Example: Model 6NN-G5-M4-C2A-YY
   Typical Dead Band 1.4 psi
   G-Switching Element multiplier = 3
   Corrected Typical Dead Band 1.4 x 3 = 4.2 psi
6. See item #9, page 7.

Switching Element Designators	Dead Band Multiplier
K, KA, N, W	1.0
D, E, J, M, Y	1.5
A, B, EF, G, JF	3.0
L, YY	3.5
AF, EE	4.0
BD, C, JJ	5.0
EG, JG	5.5
AA, BB, GG, KK	6.0
LL	6.5
AG	8.5
T	2.5 to 6.5
H	1.0 to 3.0

Form 216 (07.26) ©SOR Inc.

Pressure and Vacuum Switches

Step 2: Housing

6NN-K5-M4-C2A-YY

General Purpose NEMA 1

PP

Electrical: 3/4" NPT(F) - Right
Material: Aluminum
See Agency Listings pages 17 & 18.
See Switching Element Groups 1, 2, 3 & 4 below.

P3

Electrical: 3/4" NPT(F) - Left, Right
Material: Aluminum
See Switching Element Groups 1, 2, 3, & 4 below.

Weatherproof NEMA 4, 4X, IP66

NN

Electrical: 3/4" NPT(F) - Right
Material: Aluminum
See Agency Listings pages 17 & 18.
See Switching Element Groups 1, 2, 3 & 4 below.

N3

Electrical: 3/4" NPT(F) - Left, Right
Material: Aluminum
See Agency Listings pages 17 & 18.
See Switching Element Groups 1, 2, 3 & 4 below.

N4

Electrical: 3/4" NPT(F) - Right
Material: Aluminum
Cover: Heavy Duty with Viton gasket
See Agency Listings pages 17 & 18.
See Switching Element Groups 1, 2, 3 & 4 below.

N6

Electrical: 3/4" NPT(F) - Right
Material: Carbon Steel
See Switching Element Group 1 below.

RN RM

Electrical - RN: 3/4" NPT(F) - Right
Electrical - RM: M20 x 1.5 - Right
Six-place compression type terminal block
Material: Aluminum
See Agency Listings pages 17 & 18.
See Switching Element Groups 1, 2, 3 & 5 below.

RT RS

Electrical - RT: 3/4" NPT(F) - Right
Electrical - RS: M20 x 1.5 - Right
Six-place compression type terminal block
Material: 316SS
See Agency Listings pages 17 & 18.
See Switching Element Groups 1, 2, 3 & 5 below.

RB

Electrical: 3/4" NPT(F) - Right
Manual reset only
Six-place compression type terminal block
Material: Aluminum
See Agency Listings pages 17 & 18.
See Switching Element Group 6 below.

Hazardous Locations - Conventional Explosion Proof NEMA 4, 4X, 7, 9, IP66

***L**

UL Listed Class I, Group C & D; Class II, Group E, F, & G; Divisions 1 & 2 as an outlet box only
Electrical: 3/4" NPT(F) - Right
Material: Cast Iron
Weatherproof with Option CG
See Switching Element Groups 1, 3 below.

***LC**

UL Listed Class I, Groups C & D; Class II, Groups E, F & G; Divisions 1 & 2 as an outlet box only
Electrical: 3/4" NPT(F) - Right
Six-place compression type terminal block with Option LL
Material: Copper-free aluminum
Weatherproof
See Switching Element Groups 1, 2 & 3 below.

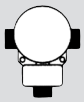

Separate electrical and set point adjustment compartments.
Weatherproof
Six-place, compression-type terminal block.
See Agency Listings pages 17 & 18.

***S**

Ul Listed Class I, Group C & D; Class II, Group E, F, & G; Divisions 1 & 2 as an outlet box only
Electrical: 3/4" NPT(F) - Left, Right, Top
Material: Cast Iron
Weatherproof with Option CG
See Switching Element Groups 1, 3, 6 below.

***SC**

UL Listed Class I, Groups C & D; Class II, Groups E, F & G; Divisions 1 & 2 as an outlet box only
Electrical: 3/4" NPT(F)-Right, Left, Top
Six-place, compression-type terminal block with Option LL
Material: Copper-free aluminum
Weatherproof
See Switching Element Groups 1, 2, 3 & 6 below.

***B3** Electrical: 3/4" NPT(F) - Left, Right
Material: Aluminum

***B4** Electrical: M20 x 1.5 - Left, Right
Material: Aluminum

***B5** Electrical: M20 x 1.5 - Left, Right
Material: Cast Iron

***B6** Electrical: 3/4" NPT(F) - Left, Right
Material: Cast Iron

***TA**

Class I, Group A, B, C, & D; Class II, Groups E, F, & G; Divisions 1 & 2 as an outlet box only
Electrical: 3/4" NPT(F) - Left, Right, Top
Material (Housing): Aluminum
Material (Cover): Aluminum
Weatherproof with Option CG.
See Switching Element Groups 1 & 3 below.

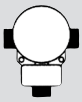

***J4**

Explosion Proof IIB - T4. Separate electrical and set point adjustment compartments.
Electrical: PF 3/4"(F) - Right
Six-place, ring-type terminal block.
Material: Aluminum
See Switching Element Groups 1, 2, & 3 below.

Switching Element Groups 1, 2, 3 & 5 below.

*Not recommended for direct mount where vibration is expected. Housing should be securely mounted to a flat surface (bulkhead or panel rack) or pipe stanchion.

	Group 1	Group 2	Group 3	Group 4	Group 5	Group 6
Switching Element Group/Housing Compatibility	A, AA, B, BB, BD*, C**, E, EE, G, J, JJ, K, KA, L, N, W, Y	GG, KK, LL, YY	T	H	AF, AG, EF, EG, JF, JG	D, M

*BD only available with RN, RM, RT and RS housings.
**C micro switch is not available in L, S and TA housings.

Pressure and Vacuum Switches

Step 3: Switching Element

6NN-**K**5-M4-C2A-YY

Switching Element Service	Electrical Contact Type	Electrical Connection Type	AC Rating		DC Rating Resistive				Dead Band Multiplier		Designator	
			Volts	Amps	Volts	Amps	Volts	Amps	SPDT	DPDT	SPDT	DPDT
Normal Service AC	Single Switching Element SPDT - (1) SPDT Double Switching Element DPDT - (2) SPDT Synchronized actuation/deactuation at increasing/decreasing set points.	K, KA, G, L, C, N, Y, W Switching Elements - Screw Terminals. All other Switching Elements _ 18" 18 AWG Color-Coded Wire Leads except when terminal blocks are specified. T & H Switching Elements - Consult Factory.	250	15	125	0.4*	30	5.0*	1.0	6.0	K	KK
Low Power Gold Contacts			125	1	-	-	28	1.0*	1.0	-	KA	-
			125	1	-	-	30	1.0	1.5	5.0	J	JJ
Wide Dead Band AC			250	15	125	0.5	-	-	3.0	6.0	G	GG
AC or DC			250	11	125	0.5*	30	5.0	3.0	6.0	A	AA
Wide Dead Band DC			250	15	125	0.5	30	10*	3.5	6.5	L	LL
Narrow Dead Band DC			250	5	125	0.5*	30	5.0*	1.5	4.0	E	EE
Very Wide Dead Band DC			250	15	125	0.5	-	-	5.0	-	C	-
Hi-Ambient Temperature Rating - 400°F			250	5	125	0.3	-	-	3.0	6.0	B	BB
			250	5	125	0.5*	-	-	1.5	3.5	Y	YY
			250	5	125	0.3*	-	-	1.0	-	W	-
Low Pressure Service 12-66 only			250	10	-	-	-	-	1.0	-	N	-
Wide Adjustable Dead Band			250	15	125	0.4*	-	-	2.5 to 6.5	-	T	-
Narrow Adjustable Dead Band			250	15	-	-	-	-	1.0 to 3.0	-	H	-
Manual Reset - (Automatic Actuation Increasing Pressure)			250	15	125	0.5	-	-	1.5	-	D	-
Manual Reset - (Automatic Actuation Decreasing Pressure)											M	-
Hermetically Sealed Switching Element			250	11	125	0.5*	30	5.0	4.0	8.5	AF	AG
			250	5.0	125	0.5*	30	5.0*	3.0	5.5	EF	EG
Hermetically Sealed Gold Contacts			125	1.0	-	-	30	1.0	3.0	5.5	JF	JG
Explosion Proof EEx d IIC T6 (SW Only)			250	7.0	250	0.25	30	7.0	5.0	-	BD	-

Cross reference compatibility chart on page 9 to ensure that switching element will fit in housing.

Review notes on page 11 for more details.

Form 216 (07.26) ©SOR Inc.

6NN-**K**5-M4-C2A-YY

Notes

1. Double switching elements have wire leads except when supplied in housings RB, RM, RN, RS, RT, B3, B4, B5, B6 and J4. Terminal blocks are standard in these housings.
2. Dead band multipliers must be applied to the typical dead band figures given in the specification tables on pages 7 and 8.
3. Switching element ambient temperature limits:

-65 to 400°F	(-54 to 204°C)	B, Y, W
-65 to 250°F	(-54 to 120°C)	A, E, & J
-40 to 167°F	(-40 to 75°C)	AF, AG, EF, EG, JF, JG
-13 to 158°F	(-25 to 70°C)	BD
-65 to 180°F	(-54 to 80°C)	All others

4. The hermetically sealed switching element capsule is ATEX Approved, UL Listed, CSA Certified and TestSafe Approved as an explosion proof snap switch according to the following table with conditions and exceptions specified in Note 3.

Agency	Hazardous Location Conditions	Designator
UL Listed CSA Certified	Class I, Groups A, B, C, & D Class II, Groups E, F & G; Divisions 1 & 2	AF, EF, AG, EG, JF, JG
TestSafe Approved	Ex s IIC T6 IP65 Class I, Zone I DIP T6 IP65	AF, EF, AG, EG
ATEX Approved	II 2 G EEx m II	AF, EF, AG, EG, JF, JG

5. Switching elements W, & Y have Elgiloy springs.
6. Certain switching elements are capable of handling greater voltage and/or amperage. Consult the factory should your requirements exceed catalog values. All switching elements above except BD are UL Recognized and CSA Certified. The DC current ratings marked with an asterisk (*) are not UL Listed but have been verified by testing and/or experience.
7. Ambient temperature is reduced to 200°F (93°C) for J, JJ, A, AA, E, EE, B, BB, Y, YY, & W switching elements when CV accessory is selected.

CAUTION: The switching element assembly has been precisely positioned in the housing at the factory for optimum performance. Any inadvertent movement or replacement in the field will degrade performance, could render the device inoperative, and can void the warranty unless factory authorized procedures are followed.

Step 5: Diaphragm & O-Ring

6NN-K5-**M4**-C2A-YY

Notes

1. N4 diaphragm system is standard, but requires a designator in the model number. It is normally suitable for air, oil, water and noncorrosive processes. M2 diaphragm system is standard on Number 56 vacuum switches. (See notes 10 & 13.)
2. U7 designates a welded flush-type diaphragm. Available only in 1" NPT(M) 316SS on Numbers 5 & 6 pistons with K switching element. See page 15.
3. U8 designates the welded fire-safe diaphragm system. 316SS is stocked. Not available on Number 1 piston or vacuum switches. Example: U8-C2A is a 316SS fire-safe welded diaphragm system. See page 15.
4. U9 designates a welded diaphragm system. Not available on vacuum switches.
   Example: U9-A1A is a Monel welded diaphragm system. See page 15.
5. Other diaphragm and o-ring combinations may be available. Consult the factory or the SOR representative in your area for more information.
6. Wetted parts have been selected as representing the most suitable commercially available material for use in the service intended. However, they do not constitute a guarantee against corrosion or permeation, since processes vary from plant to plant and concentration of harmful fluids, gases or solids vary from time to time in a given process. Empirical experience by users should be the final guide. Alternate materials are generally available.

(Continued on page 13.)

O-Ring (Wetted)	Diaphragm (Wetted Primary)	Designator
Viton	Monel	A4
Kalrez*		A6
Viton	Hastelloy-B	H4
Kalrez*		H6
Viton	Hastelloy-C	J4
Kalrez*		J6
Viton	Carpenter-20	L4
Kalrez*		L6
Viton GLT	316L SS	M1
Buna-N		M2
Viton		M4
Neoprene		M5
Kalrez*		M7
Aflas		M8
EPR		M9 (See Note 11)
Viton	TCP Teflon-Coated Polyimide	N1 (See Note 13)
Buna-N		N3 (See Note 7)
Buna-N		N4 Standard (See Notes 1 & 13)
Kalrez*		N5 (See Note 13)
Kalrez*	Kalrez	N6
EPR	TCP Teflon-Coated Polyimide	N7 (See Note 13)
Aflas		N8 (See Note 13)
Buna-N	Buna-N	P1 (See Note 13)
Neoprene	Neoprene	R1
Viton	Viton	S1
Viton GLT		S2
Buna-N	Tantalum (See Note 10)	W2
Viton		W4
Neoprene		W5
Kalrez*		W6
EPR	EPR	Y1
None	Welded	U7 (See Note 2)
None	Fire-Safe Welded	U8 (See Note 3)
None	Welded	U9 (See Note 4)

*Kalrez or equivalent Perfluoroelastomer (FFKM) o-rings

Form 216 (07.26) ©SOR Inc.

7. N3 diaphragm system utilizes a durable back-up diaphragm for high cycle-rate, high shock applications where Buna-N and TCP are compatible with the process. Consult factory if process temperatures are well below freezing.
8. This table shows allowable minimum and maximum temperatures for o-rings. Consult the factory for temperatures down to –65°F on fire-safe and welded metal diaphragm systems.

O-Ring Material	°F	°C
Viton	32 to 400	0 to 204
Viton GLT	-20 to 400	-29 to 204
Kalrez*	5 to 400	-15 to 204
Aflas	25 to 400	-4 to 204
Buna-N Neoprene EPR	-30 to 200	-34 to 93
Fire-Safe/Welded Diaphragm System	-30 to 400	-34 to 204
TCP Teflon-Coated Polyimide Diaphragm	-30 to 400	-34 to 204
*Kalrez or equivalent Perfluoroelastomer (FFKM) o-rings		

9. Dead bands are slightly higher when using H, J, N3, N6, U or W series diaphragm options. Consult the factory.
10. Diaphragm systems N1, N3, N4, N5, N6, N7, N8, P1, R1, S1, S2, W2, W4, W5, W6, Y1, U8, U9 are not available on vacuum switches with number 56 pistons.
11. M9 diaphragm system is suggested for steam applications up to 400°F.
12. If Kalrez, EPR or Viton is selected for high temperature process media or ambient temperature requirements, the A, B, E, J, W or Y switching elements are suggested with reference to the table in Note 3, page 11.
13. Only diaphragm systems N1, N4, N5, N7, N8 and P1 are available on the 12-66 piston spring combination.

Pressure and Vacuum Switches

Step 6: Pressure Port

6NN-K5-M4-**C2A**-YY

Piston		12, 4 52, 54	6, 5, 9 1, 56	12, 4 52, 54	6, 5, 9 1, 56	6, 5, 9 1, 56	4, 54	12, 52	12, 52
Process Connection Size		1/4" NPT(F)		1/2" NPT(F)		3/4" NPT(M)	1" NPT(M)	1" NPT(F)	2" NPT(F) 1/4" NPT(F) Flushing Port
Pressure Port Material	Aluminum Series 2000 Wrought 356 or 360 Casting	**B1A** (Standard)	-	**B2A**	-	-	-	-	-
	303 Stainless Steel	-	**G1A** (Standard)	-	**G2A**	G3A	-	-	-
	316SS/316LSS Wrought or CF-8M Casting	**C1A**		**C2A**		**C3A**	**C4A***	**C5A**	**C6A**
	347 Stainless Steel Wrought or CF-8C Casting	E1A		E2A		E3A			
	Carpenter 20 Stainless Steel Wrought or CF-7M Casting	L1A		L2A		L3A			
	Brass (See Note 6) Half Hard Yellow Wrought or Silicon Brass Casting	D1A		D2A		D3A			
	Carbon Steel Ledloy Wrought or WCB Casting	-	**F1A**	-	**F2A**	-			
	Hastelloy-B	H1A		H2A		H3A			
	Hastelloy-C	J1A		J2A		J3A			
	Monel	A1A		A2A		A3A			

Consult factory for availability of any option in this section of the table.

*C4A only available with Pistons 5 & 6 when U7 diaphragm is specified. See page 15.

Notes

1. Select designators for material and connection size. Large bold-face letters denote those items generally available from stock. Small light-face letters denote items with limited stock and possible long delivery.
2. 1/4" and 1/2" tapered BSP(F) pressure ports are available. Consult factory.
3. Combinations are possible when a particular connection size is not available for the range (piston spring) desired. For example, if 2" NPT(F) is desired for a Number 4 piston, the Number 12 pressure port can be supplied. The piston would be designated as Number 124 and the overrange and proof pressures for Number 12 apply. Note: 124, 125 and 126 are the only available combinations.
4. Many other materials such as PVC, Kynar, etc., are available. Denote materials not shown by specifying an X followed by the required connection size, and describe the material.

Examples:

X2A = PVC pressure port with 1/2" NPT(F) connection.

X1A = Titanium pressure port with 1/4" NPT(F) connection.

Non-metal pressure ports generally reduce proof pressure and may reduce overrange pressure. The pressure port material may limit the process temperature. Delivery may be longer than normal.

5. Raised-face and flat-face flanges to match ASA 150 and ASA 300 lb. in commercially available materials can be supplied on Series 12 and 4 pistons by adding an X suffix to the model numbers and specifying "X - (size) inch (material) (raised- or flat-) face flange to match ASA (rating) lb."
6. Brass not available on Piston Numbers 9 and 1.
7. 1/4" NPT(F) Flushing Port standard on C6A pressure ports.

See next page for presentation of welded diaphragm and FM Approved fire-safe systems.

Designator	Description
U7 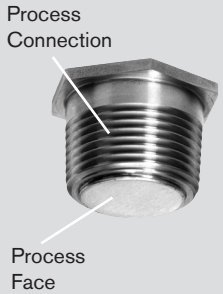 	**Welded Flush-Type Diaphragm System** A metal diaphragm is welded to the process face of the pressure port, thereby, eliminating the o-ring. This arrangement may be indicated for viscous or slurry process where cleanliness is required or where process build-up and clogging is unacceptable. The pressure port designator determines the material: Only 1" NPT(M) 316SS is available. **Example:** U7-C4A U7 = 316SS welded flush-type diaphragm C4A = 1" NPT(M) 316SS pressure port **Note:** U7 is limited to Numbers 5 and 6 pistons and the K switching element. Not available on vacuum switches.
U8 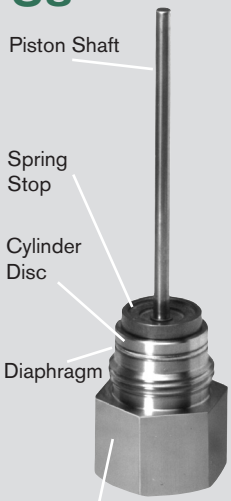 	**Fire-Safe Welded Diaphragm System** **Factory Mutual System Approved - U.S Patent Number 4,438,305** Tested in flames at 1900°F for periods up to 30 minutes while pressurized to the rated overrange pressure. A metal diaphragm, the cylinder disc and the pressure port are welded as a unit, thereby, eliminating the o-ring. This arrangement may be indicated for extremely corrosive, hot, harsh or volatile process where o-rings are not suitable. See fire-safe definition on page 6. 316SS is stocked. Hastelloy B and C, and Monel are available, but may require a longer lead time. The pressure port designator determines the material. **Example:** U8-C2A U8 = Fire-safe welded diaphragm system C2A = 1/2" NPT(F) 316SS pressure port **Note:** 1/2" NPT(F) is stocked; 1/4" NPT(F) is not stocked and has a longer lead time. Not available on Number 1 piston and vacuum switches.
U9 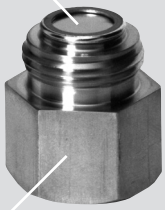 	**Welded Diaphragm System** A metal diaphragm is welded to the pressure port, thereby, eliminating the o-ring. This arrangement may be indicated for extremely corrosive, hot or harsh process where o-rings are not suitable. 316SS is stocked. Hastelloy B and C, and Monel are available, but may require a longer lead time. The pressure port designator determines the material. **Example:** U9 - A2A U9 = Monel welded diaphragm A2A = 1/2" NPT(F) Monel pressure port **Note:** Not available on vacuum switches.

C6A

Two-inch Pressure Port

The wide pressure port minimizes the possibility of clogging when the process media is sludgy or viscous. See page 20 for dimensions. A 2" NPT(F) pressure port with a 1/4" NPT(F) flushing port can be supplied with a welded diaphragm, or with a conventional diaphragm and o-ring combination.

Step 7: Accessories

6NN-K5-M4-C2A-**YY**

Accessory/Option & Description		Designator
Wetted parts are cleaned for oxygen service.		BB
ATEX/IECEx approved pressure/vacuum switch. See Agency Listings on page 18 for details.		CL
CSA Certified pressure/vacuum switch. Available with PP, NN, RB, RN, RT, B3 and B6. Housing has earth (ground) lug. See Agency Listings on page 17 & 18 for details.		CS
Neoprene cover gasket (o-ring) to make L, S and TA explosion-proof housings weathertight.		CG
Canadian Registration Number (CRN) - Process ratings may be affected. Consult the factory for details.		CV
Cemented cover gasket on weathertight housings.		GC
Sealed electrical lead adapter. Provides protection to housing interior, switching element and dry side of pressure sensing assembly from condensate in the electrical conduit and corrosive atmospheres. (Protrudes approximately 2" from housing.)		GG
Universal terminal box. Stainless steel, 1/2" NPT(F). ATEX/IECEx Approved Ex db IIC T4, T5, T6 & Gb.		HB**
Universal terminal box. Stainless steel, M20 x 1.5(F). ATEX/IECEx Approved Ex db IIC T4, T5, T6 & Gb.		HBME**
Universal terminal box. Stainless steel, 1/2" NPT(F). FM Approved and CSA Certified. Explosion Proof Class I, Groups A, B, C, & D; Class II, Groups E, F & G; Class III; Divisions 1 & 2 (NEMA 4X IP65)		HT**
Breather Drain	Crouse Hinds ECD-15 for Hazardous Locations Class I, Groups C & D, Class II, Groups E, F & G; on S or SC housings only.	KK
	Sintered metal plug in weathertight housing.	
Terminal block. 6-place compression type standard in B and R series housings. Optional in LC and SC housings. 6-place screw type standard in J4 housing.		LL
Multi-Listed pressure/vacuum switch. ATEX, IECEx, CSA & UL. Available with B3 & B6 housings. See Agency Listings on Pages 17 & 18 for details.		ML
Vacuum protector plate. Retains diaphragm in pressure switch if subjected to vacuum greater than 10 in. Hg. If a pressure switch is subjected to continuous, rapid changes of vacuum, other protection may be available (consult factory). Material matches or exceeds pressure port material. N/A on Pistons 52, 54, or 56.		MM
Compliance to NACE Certification MR0175/ISO 15156.		NC*
INMETRO approved pressure/vacuum switch. See Agency Listings on page 18 for details.		NM
Carbon steel body with stainless steel adjusting nut.		PB
Pipe (stanchion) mounting kit for (1-1/2 to 2" pipe).		PK
Tag, fiber. Attached with plastic wire to housing. Stamped with customer-specified tagging information.		PP
Powder coat epoxy coating. No coating on stainless steel parts or plated screws. (500 hours-salt spray)		PY
Tag, 316SS. Attached with 304SS wire to housing. Stamped with customer-specified tagging information. (2 lines, 18 characters and spaces per line).		RR
Stainless steel body and adjusting nut for corrosive environments.		SB
Stainless steel piston and cylinder disc for corrosion resistance.		SP
Explosion proof weatherproof electrical junction box with screw terminals. Aluminum 3/4" NPT(F) top or right conduit connections as required. UL Listed and CSA Certified Class I, Groups A, B, C & D; Class II, Groups E, F & G; Divisions 1 & 2. (Available on L, LC, S, SC and TA housing.) Includes cover o-ring for weatherproof applications.		TB**
Taiwan Safety Mark. Requires IECEx approval. See Agency Listings on page 18 for details.		TS
Oversize 316SS nameplate or separate 316SS tag. Permanently attached to housing. Stamped with customer-specified tagging information.		TT
Fungicidal varnish. Covers exterior and interior except working parts.		VV
UL Listed pressure vacuum switch. Available with B3 and B6 housings. See Agency Listings on page 17 & 18 for details.		WV
"X" is used as a suffix to the model number for special requirements not keyed elsewhere in the model number by an "X". Each "X" must be completely identified in the text of the order or inquiry. When more than one "X" is required, use "X" followed by the number of such items. For example, "X3" means three separate otherwise unidentifiable requirements.		X
Epoxy coating. Exterior only. Polyimide epoxy with 316SS pigment. (200 hours-salt spray)		YY
Chained cover with captive screws to conform to former JIC specification.		ZZ

Note: See pages 17 & 18 for Agency Approved, Certified or Listed Accessories Options.

* Consult the factory for materials other than 316/316L.

** Agency ratings for SOR product sold with junction boxes will be limited to either the rating of the instrument housing or junction box, whichever is lower.

Test Certificates

Certificates	D1	D2	C1	C2	C3	C4	C5	C6	C8	B1	B4	B5	B6	B7	A1	A2	A3	A4	A5	A6	A7	A8
Calibration			◆							◆	◆	◆	◆	◆	◆	◆	◆	◆	◆	◆	◆	◆
Hydrostatic Pressure Test				◆						◆	◆					◆	◆	◆	◆	◆	◆	◆
Inspection Report					◆					◆	◆	◆	◆	◆			◆	◆		◆	◆	◆
Compliance / Conformance						◆								◆	◆	◆		◆	◆			◆
Dielectric Test							◆				◆	◆									◆	
Insulation Resistance								◆			◆	◆	◆							◆	◆	◆
Typical Material of Wetted Parts									◆	◆	◆				◆				◆	◆		
Certificate of Origin	◆																					
Manufacturer's Certification		◆																				

Agency Listings

UL For Hazardous Locations Class I, Groups B, C, & D; Class II, Groups E, F, & G; Divisions 1 & 2

Piston	Housing	Switching Element	Spring	Diaphragm & O-Ring	Pressure Port Material & Connection Size	Accessories
ALL	B3, B6	A, AA, AF, AG, B, BB, C, E, EE, EF, EG, G, GG, H, J, JF, JG, JJ, K, KA, KK, L, LL, N, P, T, W, Y, YY	ALL	ALL	ALL	WV or ML Required
						All except CG, GC, GG, HB, HT, KK, LL, ME, TB, TS, ZZ

CSA For Hazardous Locations Class I, Groups B, C, & D; Class II, Groups E, F, & G; Divisions 1 & 2

Piston	Housing	Switching Element	Spring	Diaphragm & O-Ring	Pressure Port Material & Connection Size	Accessories
ALL	B3, B6	A, AA, AF, AG, B, BB, C, E, EE, EF, EG, G, GG, H, J, JF, JG, JJ, K, KA, KK, L, LL, N, P, T, W, Y, YY	ALL	ALL	ALL	CS or ML Required
						All except CG, GC, GG, HB, HT, KK, LL, ME, TB, TS, ZZ

General Purpose and Weathertight (CSA Enclosure Type 4)

Piston	Housing	Switching Element	Spring	Diaphragm & O-Ring	Pressure Port Material & Connection Size	Accessories
ALL	PP (General Purpose)	A, AA, B, BB, C, E, EE, G, GG, GA, H, J, JJ, JL, K, KK, KA, L, LL, N, T, W, Y, YY	ALL	ALL	ALL	CS Required
	NN (Type 4)					All except GC, LL, TS
	RN, RT (Type 4)	A, AA, AF, AG, B, BB, C, E, EE, EF, EG, G, GG, GA, J, JJ, JL, JF, JG, K, KK, KA, L, LL, N, T, W, Y, YY				
	RB (Type 4)	D, DA, M (Manual Reset only)				

TIIS

For Hazardous Locations Rating: Explosion Proof Class IIBT4

Piston	Housing	Switching Element	Spring	Diaphragm & O-Ring	Pressure Port Material & Connection Size	Accessories
1, 4, 5, 6, 9, 12, 52, 54, 56	J4	A, AA, B, BB, C, E, EE, G, GG, GA, H, J, JJ, JL, K, KK, KL, L, LL, N, T, W, WW, Y, YY	ALL	ALL	ALL	BB, MM, NN, PB, PC, PK, PP, RR, SB, TT, W, YY, X

ATEX/IECEx or INMETRO

Ex db IIC T5/T6 Gb

Piston	Housing	Switching Element	Spring	Diaphragm & O-Ring	Pressure Port Material & Connection Size	Accessories
ALL	B3, B4, B5, B6	A, AA, AF, AG, B, BB, C, E, EE, EF, EG, G, GG, H, J, JF, JG, JJ, K, KA, KK, L, LL, N, P, T, W, Y, YY	ALL	ALL	ALL	CL (for all Hsgs) or ML (for B3/B6 Hsgs) required for ATEX/IECEx
						NM required for INMETRO
						All except CG, GC, GG, HB, HT, KK, LL, ME, TB, ZZ

Ex ia IIC T6...T4 Gb

ALL	RN, RM, RT, RS	J, JJ, JF, JG	ALL	ALL	ALL	CL required for ATEX/IECEx

Form 216 (07.26) ©SOR Inc.

Manual Reset Button

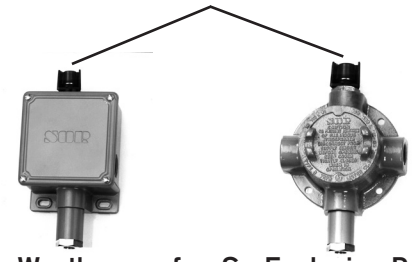

RB - Weatherproof S - Explosion Proof

SOR Pressure Switches in this catalog may be specified with manual reset electrical switching elements D or M. D actuates automatically on increasing pressure. M actuates automatically on decreasing pressure. Depress the button to manually reset. Housings must be RB (weatherproof) or S (explosion proof) because of the requirement of a hub for the manual reset assembly. Refer to page 3 for How to Order instructions.

Weights

Housing	Weight (lbs)	(kgs)
NN, N3, N4, PF, PP, P3	2	1
RB, RM, RN	2.5	1.25
N6	3	1.5
LC, SC	4	2
L, S	5	2.5
TA	6	3
B3, B4, J4, RT, RS	8	4
B5, B6	10	5

Actual shipping weights may vary from the charted values because of product material, configuration and packaging requirements.

Note
PK Pipe Kit adds approximately 1.5 lbs. (0.7 kgs). TB Junction box adds approximately 5 lbs (2.25 kgs).

Dimensions

Dimensions in this catalog are for reference only. They may be changed without notice. Contact the factory for certified drawings for a particular model number.

Notes
1. Dimensions in this catalog are expressed as millimeters over inches (Linear = mm/in.).
2. Dimensions marked with an asterisk (*) on housing dimension drawings (pages 20 through 31) vary with respect to process connection size. The chart below lists these dimension variances.
3. Electrical Connection Size: 3/4" NPT(F) standard. 1/2" NPT(F), 1/2" NPT(M), M20 x 1.5, PG 13.5, PF 3/4" optional. Consult the factory for compatibility with selected housing or agency listing.

Process Connection Size	Piston Number		
	12, 52	4, 54	6, 5, 9, 1, 56
1/4" NPT(F)	Shown	Shown	Shown
1/2" NPT(F)	Shown	Shown	Add 13.2 / 0.52
3/4" NPT(M)	-	-	Add 23.1 / 0.91
1" NPT(F)	Add 5.6 / 0.22	-	-
1" NPT(M)	-	Add 46.0 / 1.81	-
2" NPT(F)	Add 25.4 / 1.00	-	-
Length "A" 1/4" NPT(M)	Add 29.7 / 1.17	Add 29.7 / 1.17	Add 29.7 / 1.17
Length "A" 1/2" NPT(M)	Add 38.9 / 1.52	Add 38.9 / 1.52	Add 38.9 / 1.52

Dimensions in this catalog are for reference only. They may be changed without notice. Contact the factory for certified drawings for a particular model number.

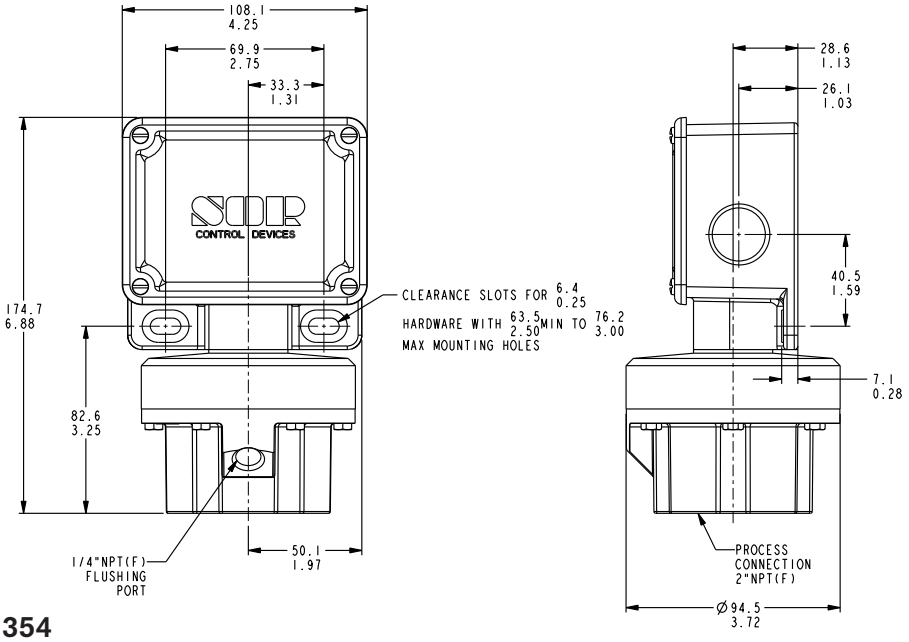

Drawing 0091354

Wide Pressure Port: C6A

See description on page 15.

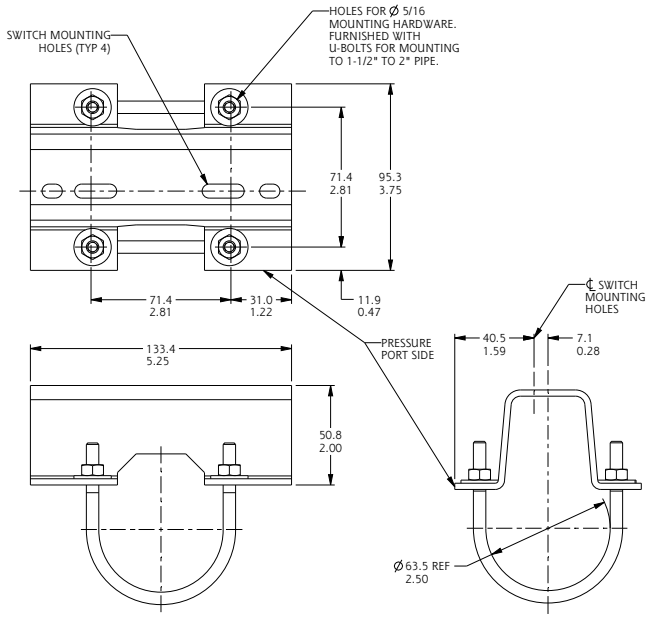

Drawing 0090300

Pipe Mounting Kit: PK

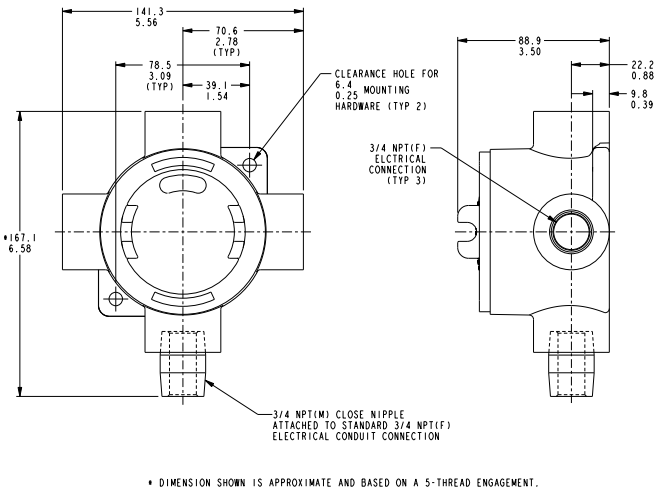

Drawing 0091353

Junction Box with Terminal Block: TB

Dimensions in this catalog are for reference only. They may be changed without notice. Contact the factory for certified drawings for a particular model number.

Weatherproof - NEMA 4, 4X, IP66

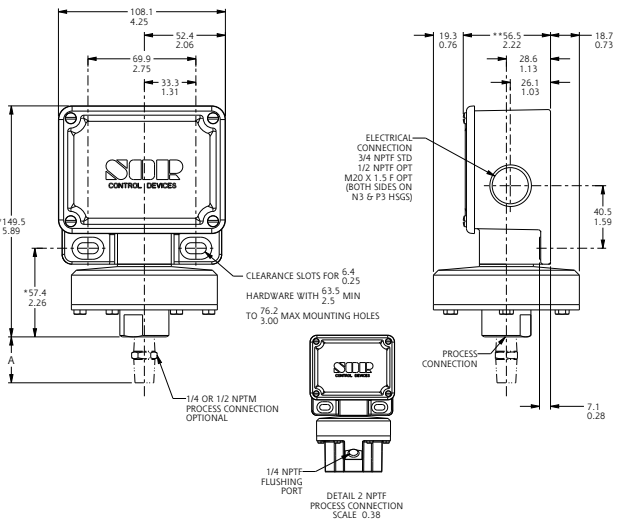

Drawing 0090100

Designators: NN, N3, N4, PP, P3

Piston Numbers 12, 52

Housings PP and P3 are General Purpose.
(Cover gasket is not installed.)

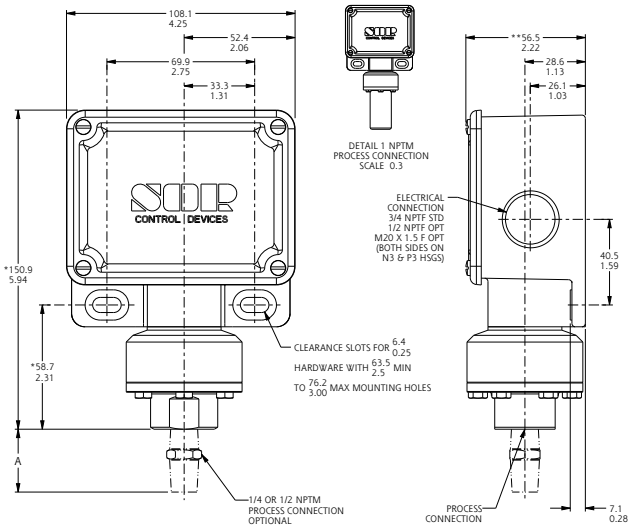

Drawing 0090110

Designators: NN, N3, N4, PP, P3

Piston Numbers 4, 54

Housings PP and P3 are General Purpose.
(Cover gasket is not installed.)

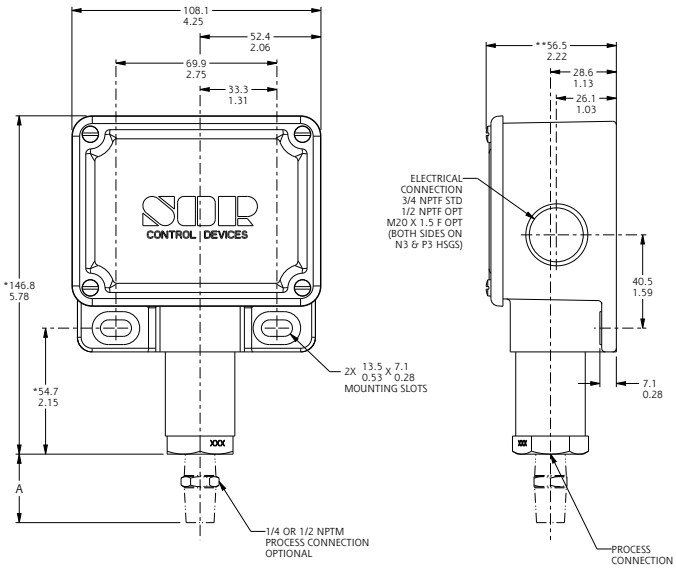

Drawing 0090120

Designators: NN, N3, N4, PP, P3

Piston Numbers 5, 6, 1, 9, 56

Housing PP and P3 are General Purpose.
(Cover gasket is not installed.)

*Refer to Dimensions table on page 19 for changes in length due to process connection size, including A dimension.
**Contact the factory for certified drawings.

Dimensions in this catalog are for reference only. They may be changed without notice. Contact the factory for certified drawings for a particular model number.

Weatherproof - NEMA 4, 4X, IP66

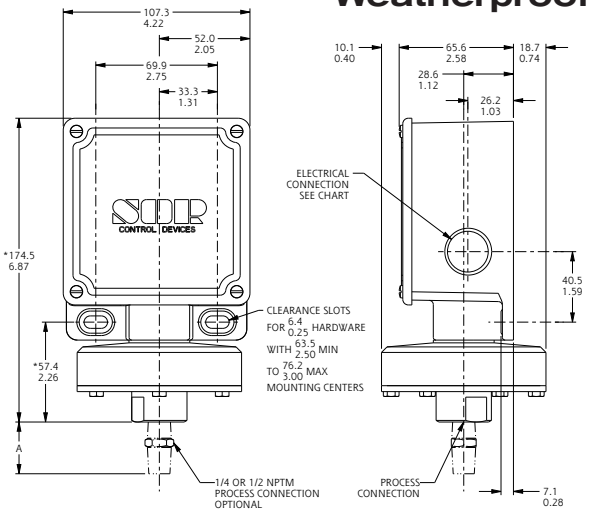

Housing	Electrical Connection
RN, RT, RM, RS	3/4" NPT(F) M20 x 1.5

Drawing 0090247

Designators: RM, RN, RS, RT
Piston Numbers 12, 52

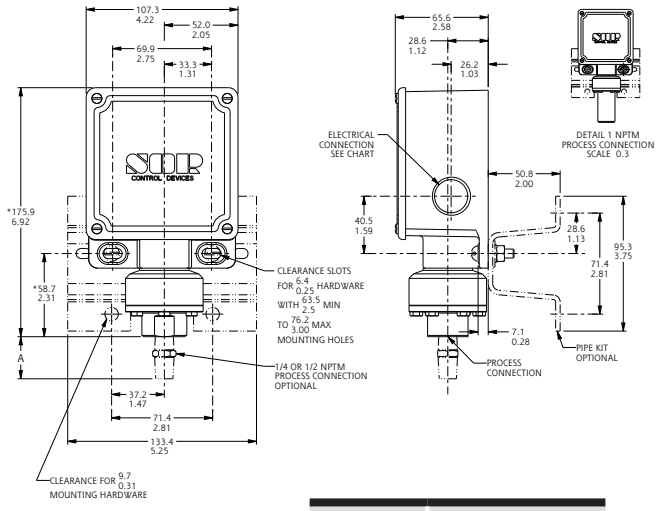

Housing	Electrical Connection
RN, RT, RM, RS	3/4" NPT(F) M20 x 1.5

Drawing 0090246

Designators: RM, RN, RS, RT
Piston Numbers 4, 54

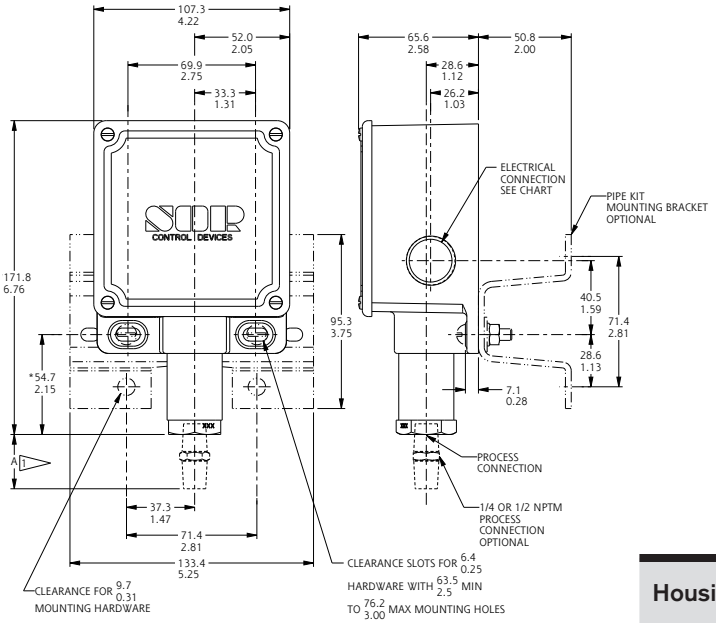

Housing	Electrical Connection
RN, RT, RM, RS	3/4" NPT(F) M20 x 1.5

Drawing 0090245

Designators: RM, RN, RS, RT
Piston Numbers 5, 6, 1, 9, 56

*Refer to Dimensions table on page 19 for changes in length due to process connection size, including A dimension.

Dimensions in this catalog are for reference only. They may be changed without notice. Contact the factory for certified drawings for a particular model number.

Weatherproof - NEMA 4, 4X, IP66

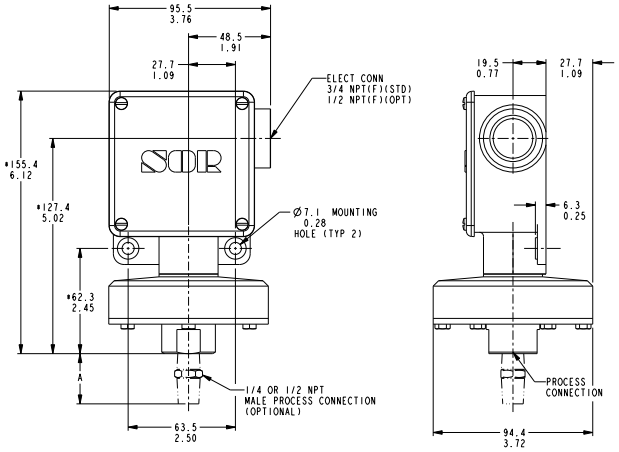

Drawing 0090009

Designators: N6
Piston Numbers 12, 52

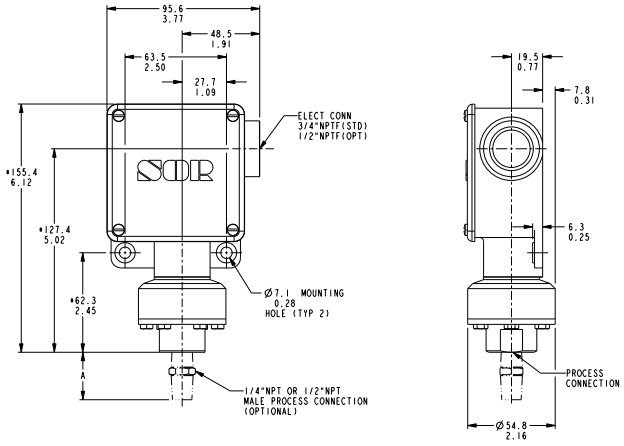

Drawing 0090010

Designators: N6
Piston Numbers 4, 54

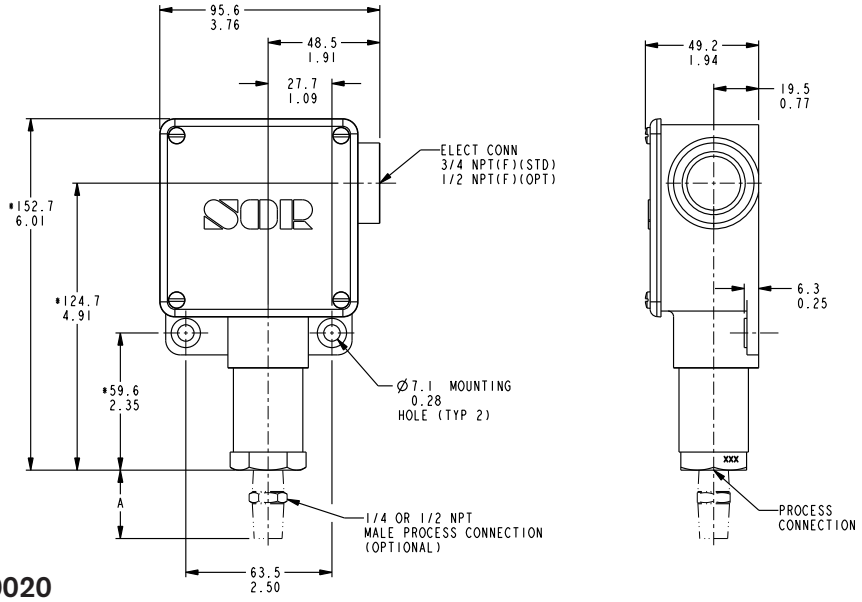

Drawing 0090020

Designators: N6
Piston Numbers 5, 6, 9, 1, 56

*Refer to Dimensions table on page 19 for changes in length due to process connection size, including A dimension.

Dimensions in this catalog are for reference only. They may be changed without notice. Contact the factory for certified drawings for a particular model number.

Conventional Explosion Proof

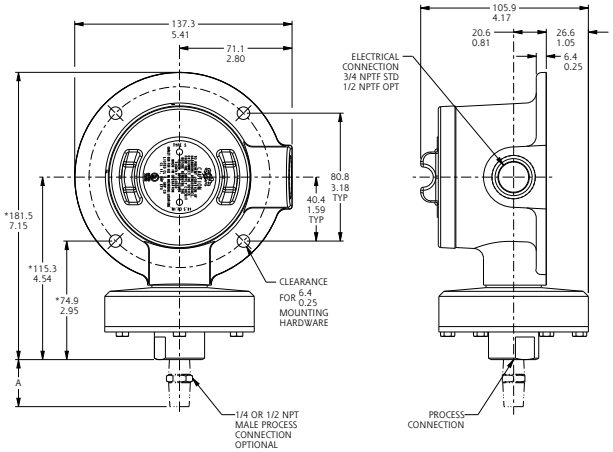

Drawing 0090146

Designators: L

Piston Numbers 12, 52

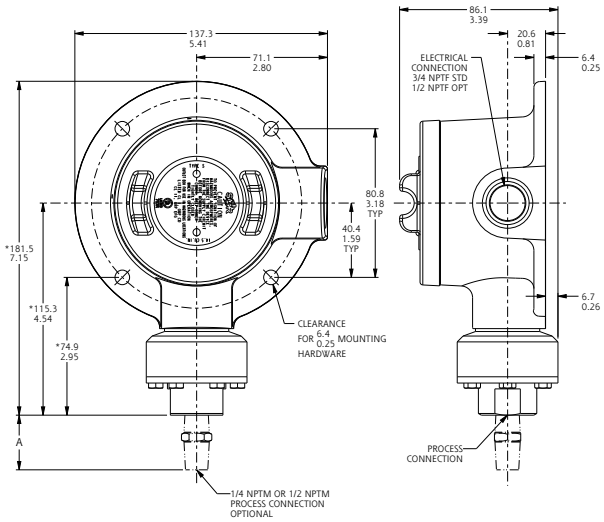

Drawing 0090145

Designators: L

Piston Numbers 4, 54

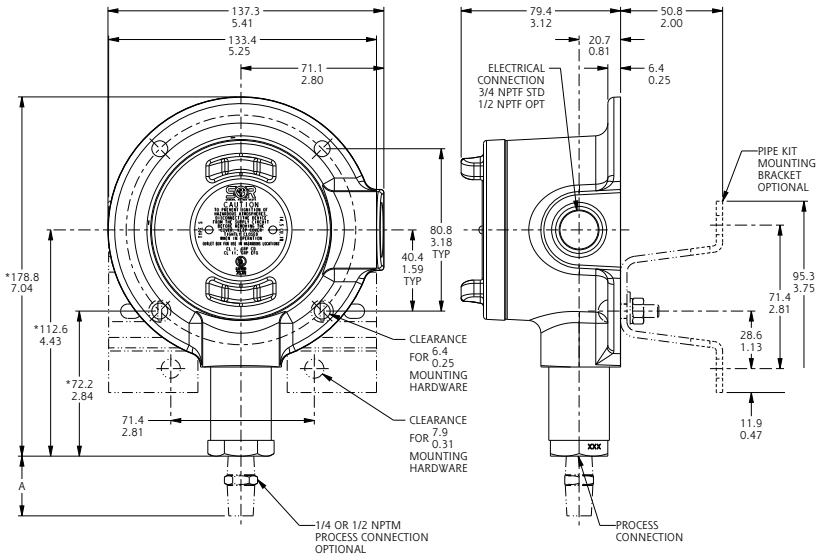

Drawing 0090144

Designators: L

Piston Numbers 5, 6, 9, 1, 56

*Refer to Dimensions table on page 19 for changes in length due to process connection size, including A dimension.

Dimensions in this catalog are for reference only. They may be changed without notice. Contact the factory for certified drawings for a particular model number.

Conventional Explosion Proof

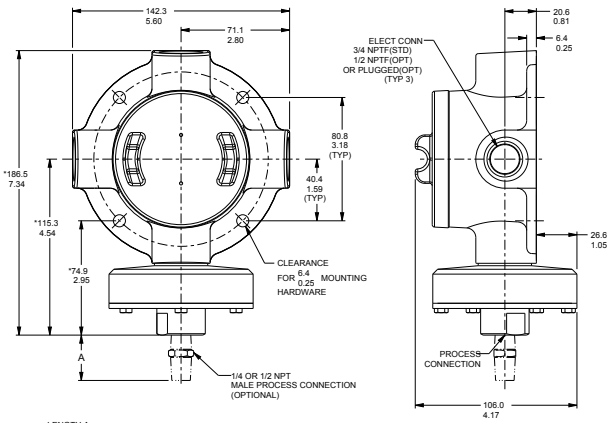

Drawing 0090149

Designators: S
Piston Numbers 12, 52

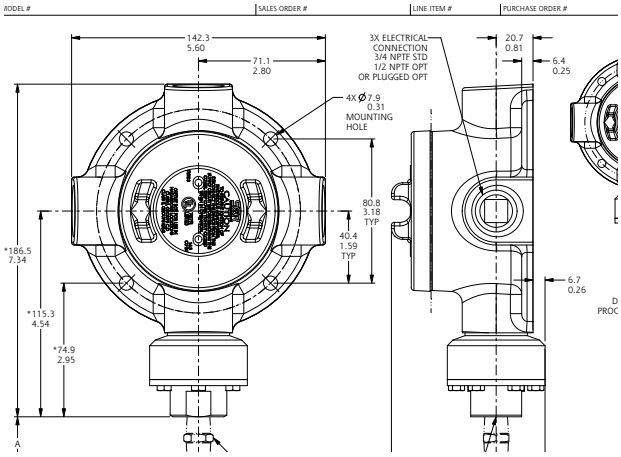

Drawing 0090148

Designators: S
Piston Numbers 4, 54

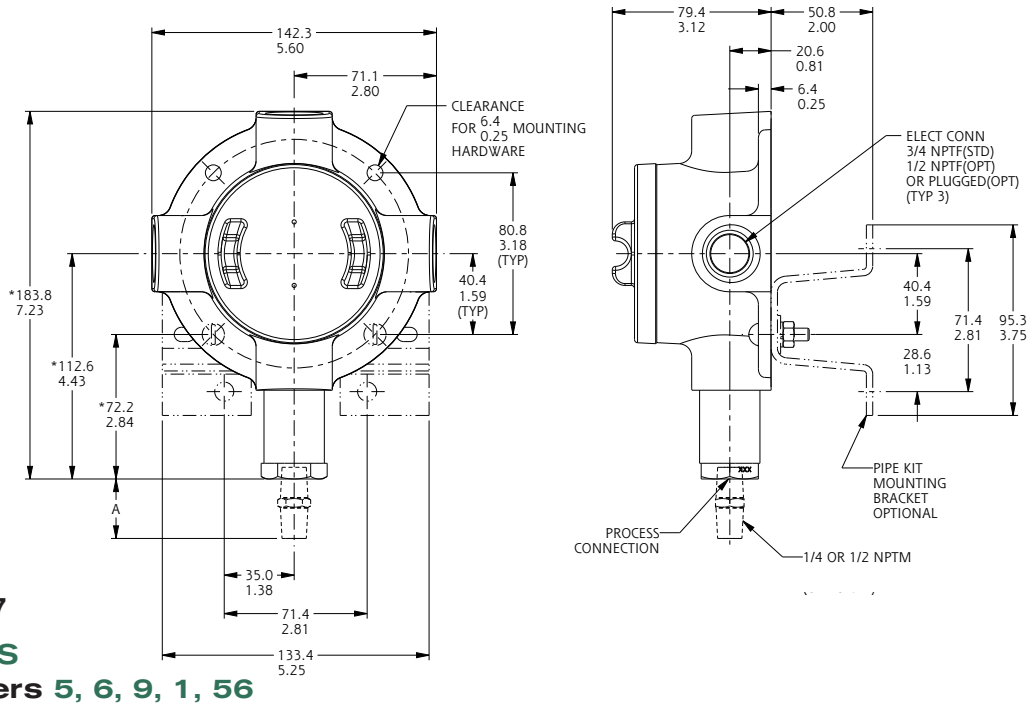

Drawing 0090147

Designators: S
Piston Numbers 5, 6, 9, 1, 56

*Refer to Dimensions table on page 19 for changes in length due to process connection size, including A dimension.

Dimensions in this catalog are for reference only. They may be changed without notice. Contact the factory for certified drawings for a particular model number.

Conventional Explosion Proof

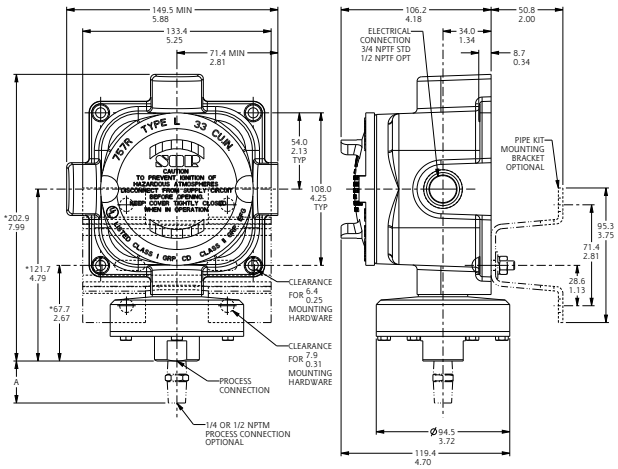

Drawing 0090399

Designators: LC SC

Piston Numbers 12, 52

SC shown. LC identical except right-hand electrical connection only.

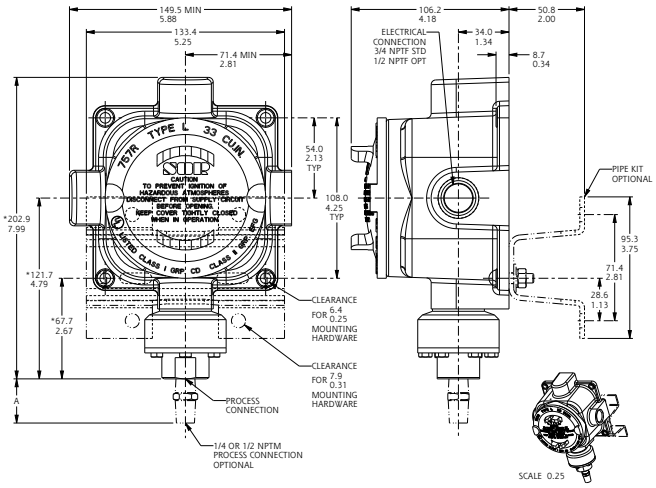

Drawing 0090456

Designators: LC SC

Piston Numbers 4, 54

SC shown. LC identical except right-hand electrical connection only.

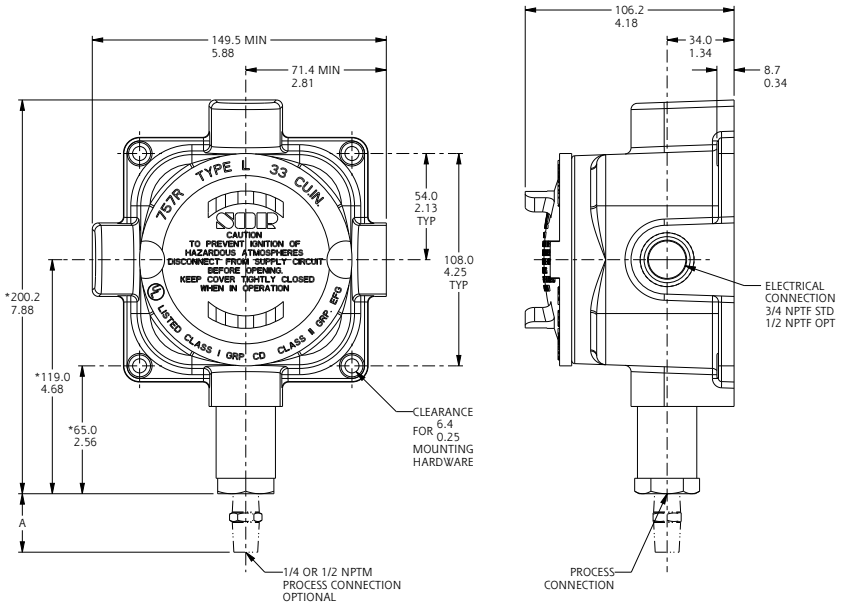

Drawing 0090408

Designators: LC SC

Piston Numbers 5, 6, 9, 1, 56

SC shown. LC identical except right-hand electrical connection only.

*Refer to Dimensions table on page 19 for changes in length due to process connection size, including A dimension.

Dimensions in this catalog are for reference only. They may be changed without notice. Contact the factory for certified drawings for a particular model number.

Conventional Explosion Proof

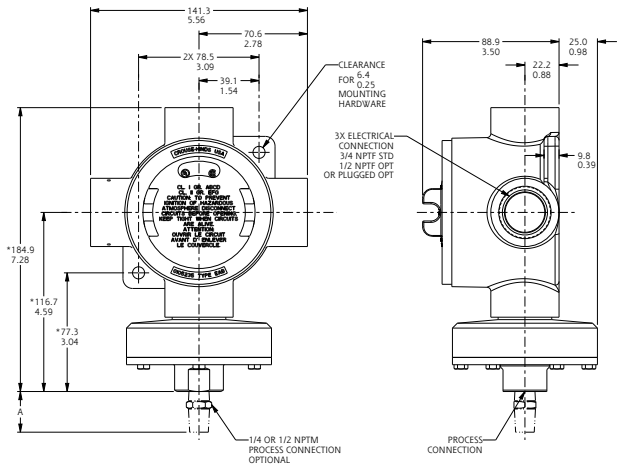

Drawing 0090155

Designators: TA
Piston Numbers 12, 52

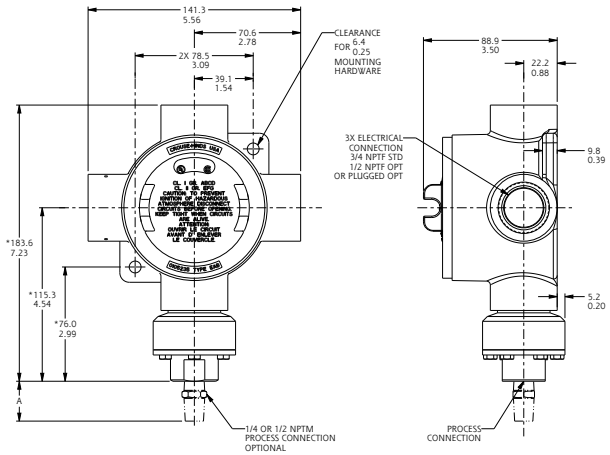

Drawing 0090154

Designators: TA
Piston Numbers 4, 54

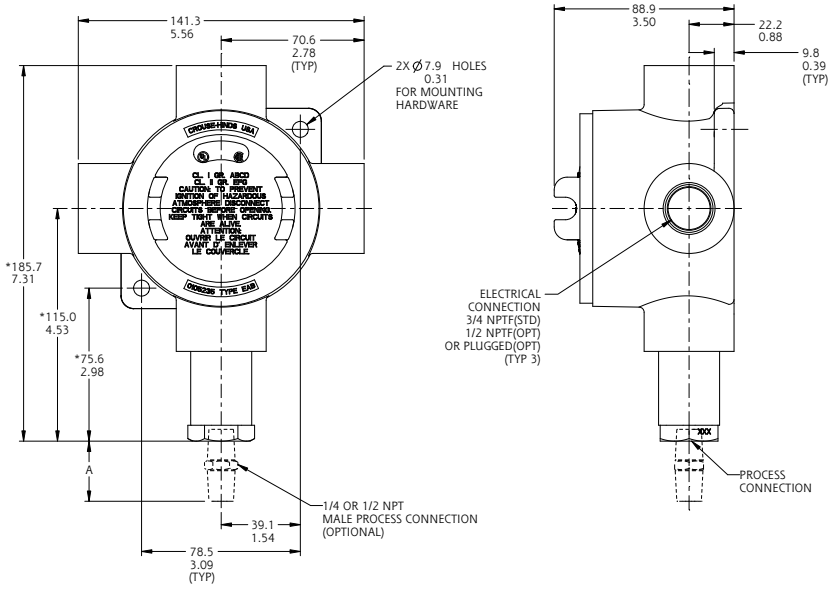

Drawing 0090153

Designators: TA
Piston Numbers 5, 6, 9, 1, 56

*Refer to Dimensions table on page 19 for changes in length due to process connection size, including A dimension.

Dimensions in this catalog are for reference only. They may be changed without notice. Contact the factory for certified drawings for a particular model number.

Explosion Proof

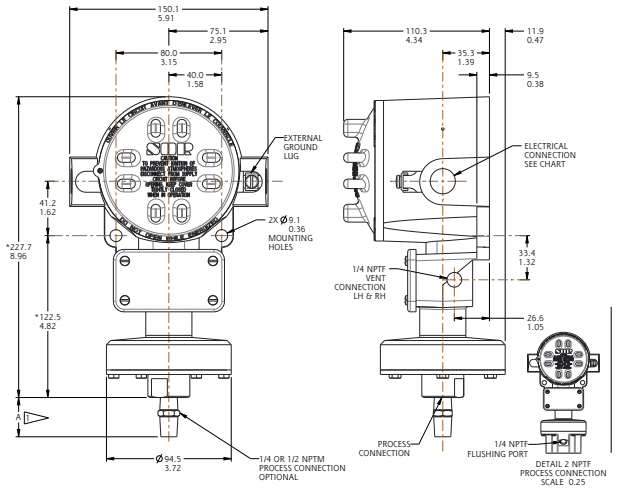

Drawing 0090297

Designators: B3, B4, B5, B6, J4
Piston Numbers 12, 52

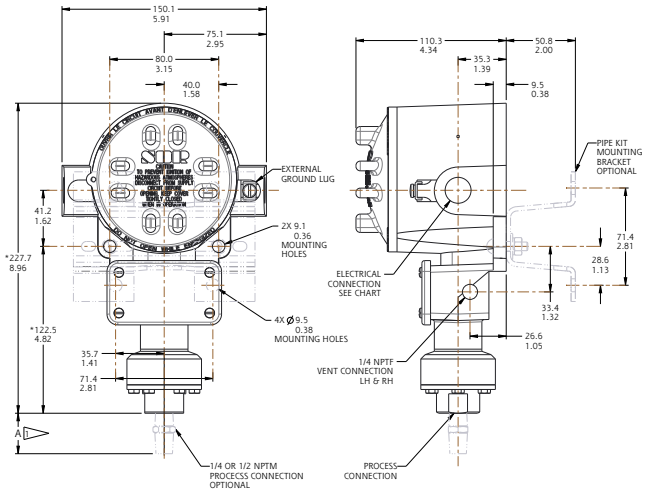

Drawing 0090284

Designators: B3, B4, B5, B6, J4
Piston Numbers 4, 54

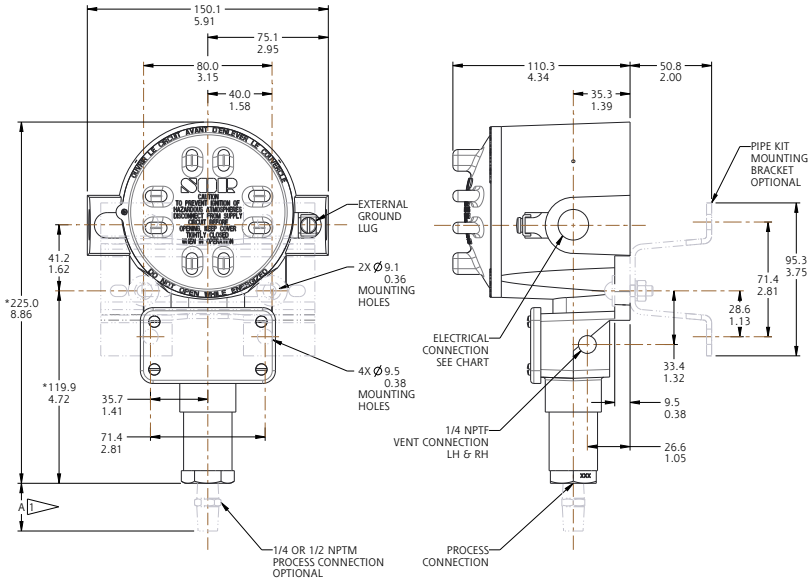

Drawing 0090882

Designators: B3, B4, B5, B6, J4
Piston Numbers 5, 6, 9, 1, 56

*Refer to Dimensions table on page 19 for changes in length due to process connection size, including A dimension.

Dimensions in this catalog are for reference only. They may be changed without notice. Contact the factory for certified drawings for a particular model number.

Weatherproof - NEMA 4, 4X, IP66

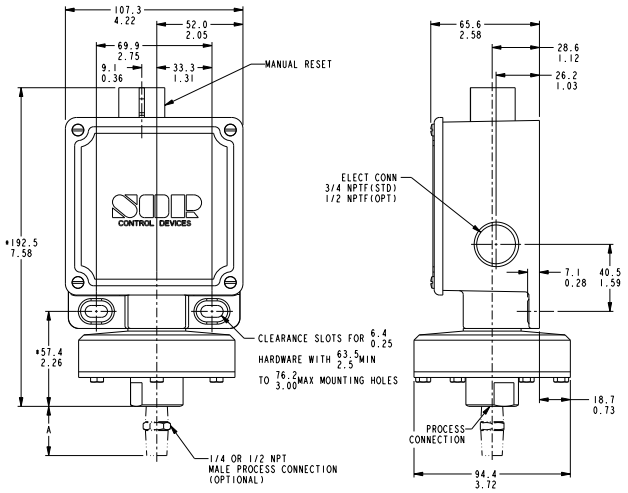

Drawing 0090269

Designators: RB Manual Reset
Piston Numbers 12, 52

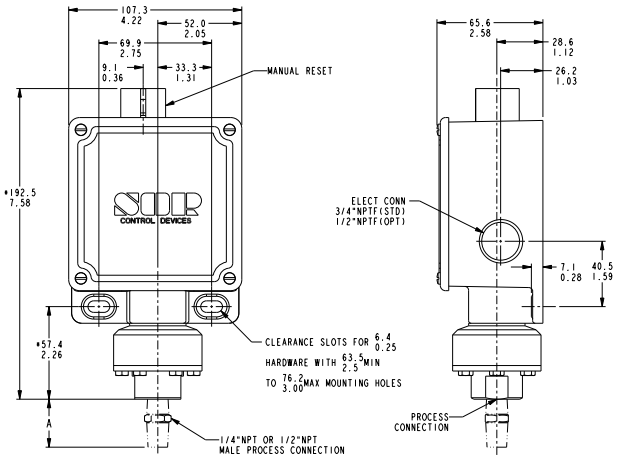

Drawing 0090270

Designators: RB Manual Reset
Piston Numbers 4, 54

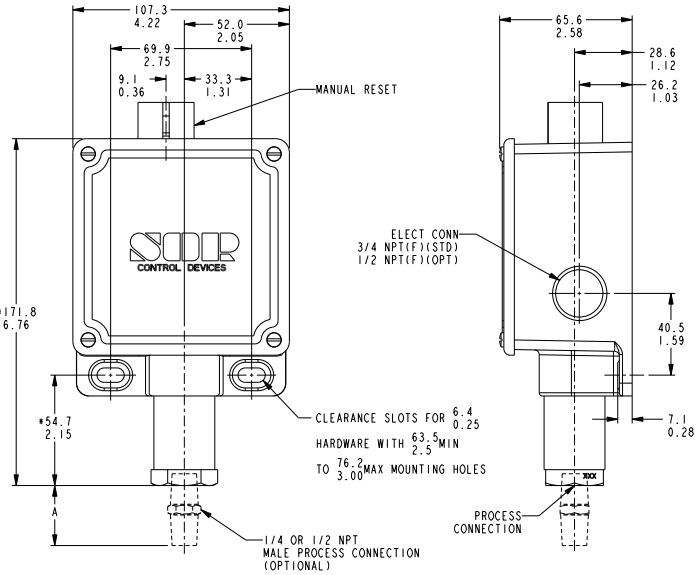

Drawing 0090271

Designators: RB Manual Reset
Piston Numbers 5, 6, 1, 9, 56

*Refer to Dimensions table on page 19 for changes in length due to process connection size, including A dimension.

Dimensions in this catalog are for reference only. They may be changed without notice. Contact the factory for certified drawings for a particular model number.

Conventional Explosion Proof

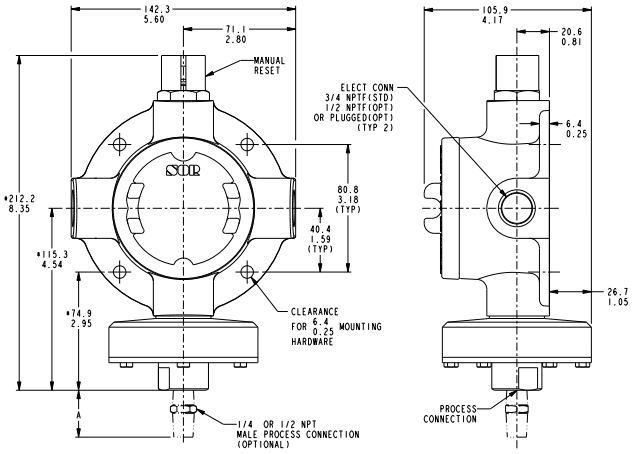

Drawing 0090167

Designators: S Manual Reset
Piston Numbers 12, 52

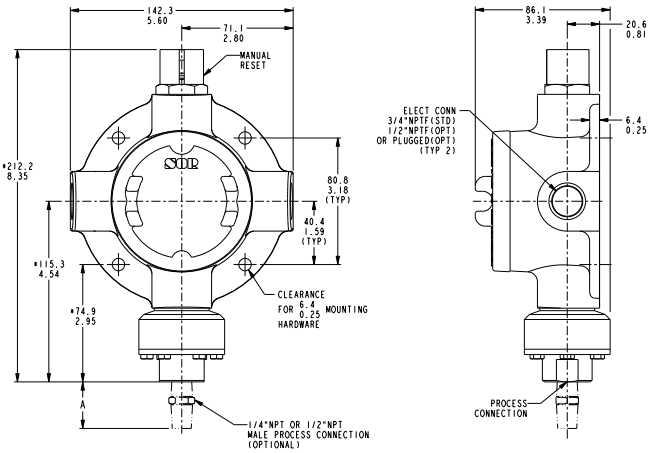

Drawing 0090168

Designators: S Manual Reset
Piston Numbers 4, 54

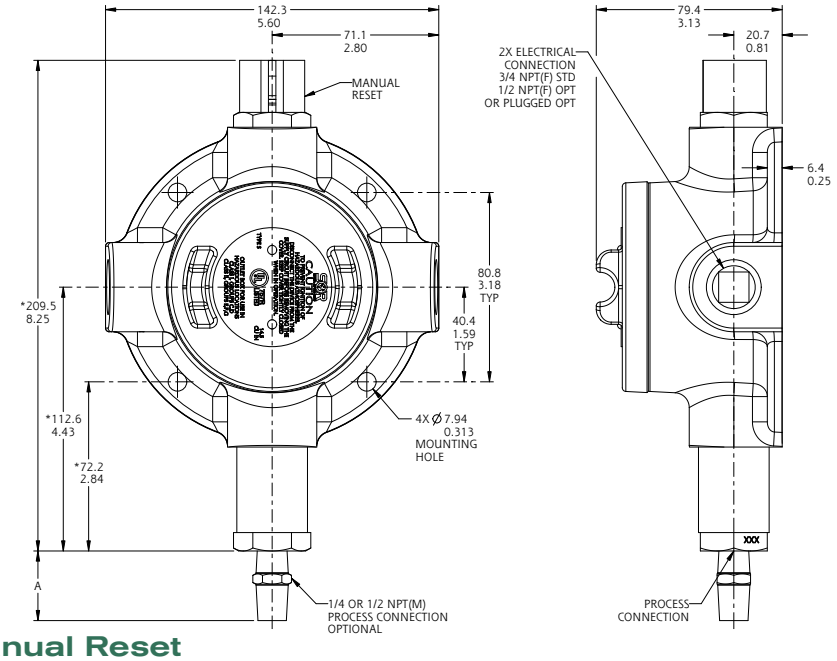

Drawing 0090169

Designators: S Manual Reset
Piston Numbers 5, 6, 1, 9, 56

*Refer to Dimensions table on page 19 for changes in length due to process connection size, including A dimension.

MEASUREMENT AND CONTROL

Lenexa, KS USA | 913-888-2630 | Fax 913-888-0767 | **SORInc.com**

REGIONAL OFFICES

China

SOR China | Beijing, China | china@SORInc.com

+86 10 6773-7806 & +86 10 6773-7807

Middle East

SOR Measurement & Control Instrumentation FZCO | Dubai, UAE

middleeast@SORInc.com | +971 4 278 9632 | Fax +1 913 312 3596

Registered Quality System to ISO 9001

Form 216 (07.26) ©SOR Inc.