815DT Smart Differential Pressure Transmitter

General Instructions

These instructions provide information for installation, process connection, electrical connection, configuration, operation and maintenance of the 815DT Smart Differential Pressure Transmitter. The 815DT consists of a field proven stainless steel pressure transducer and a reliable switching output. The housing features a stainless steel construction.

The 815DT is capable of powering long cable lengths. See Formula on page 3 for maximum loop resistance.

NOTE: If you suspect that an instrument is defective, contact the factory or the SOR® representative in your area for a return authorization number (RMA). This product should only be installed by trained and competent personnel.

Design and specifications are subject to change without notice.

For latest revision, go to ***SORInc.com.***

Table of Contents

Installation 1
Additional Install Steps for Special Units 2
Electrical Termination - 4-20 mA Output 3
Electrical Termination - 1-5 VDC Output 4
Switch Operation 4-6
Device Variables & Fault Current Indicators 7
Configuration with External Magnetic Targets .. 8
Configuration with HART® Communicator 9
HART Commands 9
Modbus Register Mapping 19
Factory Modbus Settings 20
Dimensions 21
Maintenance 22
ATEX/IECEx Marking Details 22
Declaration of Conformity 23

Installation

Ensure that wiring conforms to all applicable local and national electrical codes and install unit(s) according to relevant national and local safety codes.

Normally, line mounting provides adequate support for the instrument.

1st Step: Make the Process Connections (Hi & Lo)

❶ The process connections can be threaded onto fittings within an adequately supported process piping system. The Lo side may be vented to atmospheric pressure.

❷ Use two open end wrenches when connecting the pressure ports to a process piping system: One wrench to hold the hex flats on the pressure port, the other to tighten the process pipe or tube fittings.

❸ Process connection pipe or tubing may be rigid or flexible.

NOTE: The high pressure side (stamped H) and the low pressure side (stamped L) have 1/4" NPT(F) process connections as standard.

NOTE: This product should be installed by trained and competent personnel only.

Do not exceed 1,000 psi of static pressure. HI inlet pressure and LO inlet pressure differential should not exceed 3 times the full scale pressure range.

2nd Step: Make the Electrical Connection

❶ The electrical connection may be installed on an adequately supported rigid conduit system. Use suitable locknuts (not provided) when mounting the instrument to an unthreaded (knockout) hole.

❷ Securely connect the conduit pipe or fitting by holding the flats on the electrical connection while tightening.

❸ Electrical connection may be rigid or flexible conduit.

Unit in Hazardous Locations - Prior to removal from service, make sure that the work area is declassified. Failure to do so could result in severe personal injury or substantial property damage.

Additional Install Steps for "Dual Seal" Units

Failure to follow these additional installation instructions may diminish the "Ingress Protection" and "NEMA" ratings of the "Dual Seal" instruments. An improper installation will void the warranty.

Vertical Installation

❶ The figure on the right depicts the vertical installation profile; with the electrical leads on top. The instrument may be installed with the electrical leads on the bottom.

❷ The nameplate (tag) should cover the set screw (annunciation path). Position the nameplate slot opposite the set screw; i.e., the nameplate slot should be located 180° from the set screw.

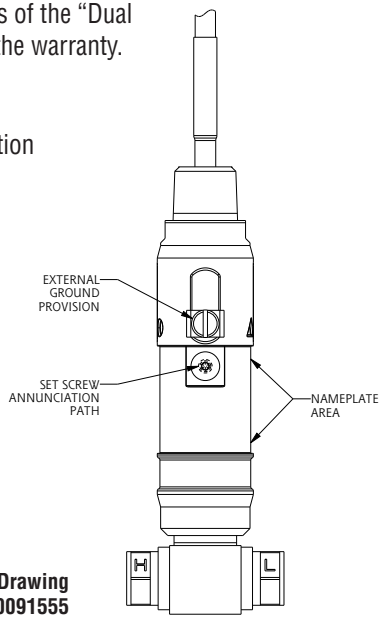

Drawing 0091555

Form 1588 (05.26) ©SOR Inc.

Horizontal Installation

❶ The following figure depicts the proper horizontal installation profile; with the external ground provision and set screw (annunciation path) oriented downward.

❷ The nameplate (tag) should not cover the set screw. Align the nameplate slot with the set screw; i.e., the set screw should be visible in the nameplate slot.

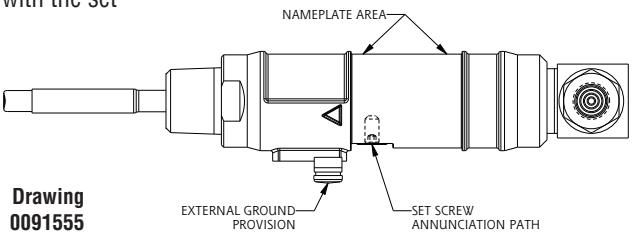

Drawing 0091555

Electrical Termination - 4-20 mA Output

72" flying leads are provided for connection to a terminal strip within a cabinet or a splice within an outlet box:

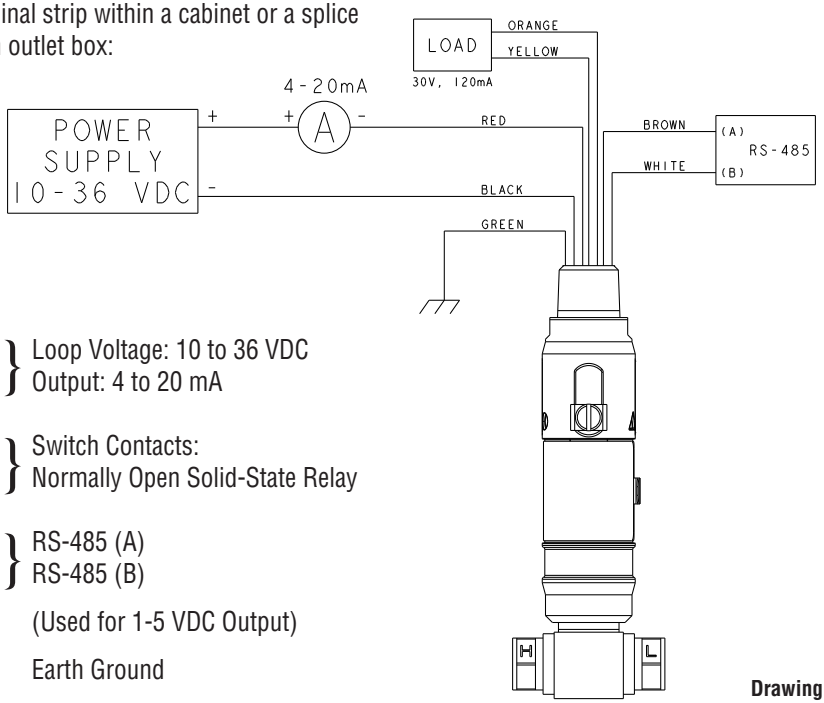

Drawing 0091546

Red (+) Black (–)	Loop Voltage: 10 to 36 VDC Output: 4 to 20 mA
Orange Yellow	Switch Contacts: Normally Open Solid-State Relay
Brown White	RS-485 (A) RS-485 (B)
Blue	(Used for 1-5 VDC Output)
Green	Earth Ground
Bare	Drain Wire - Connected to Earth Ground (trimmed at factory)

NOTE: An external ground screw is included for additional earth ground connection.

Formula for determining maximum loop resistance

$$R_L\ (MAX) = \frac{V_{Supply} - 10V}{20mA}$$

Electrical Termination - 1-5 VDC Output

72” flying leads are provided for connection to a terminal strip within a cabinet or a splice within an outlet box:

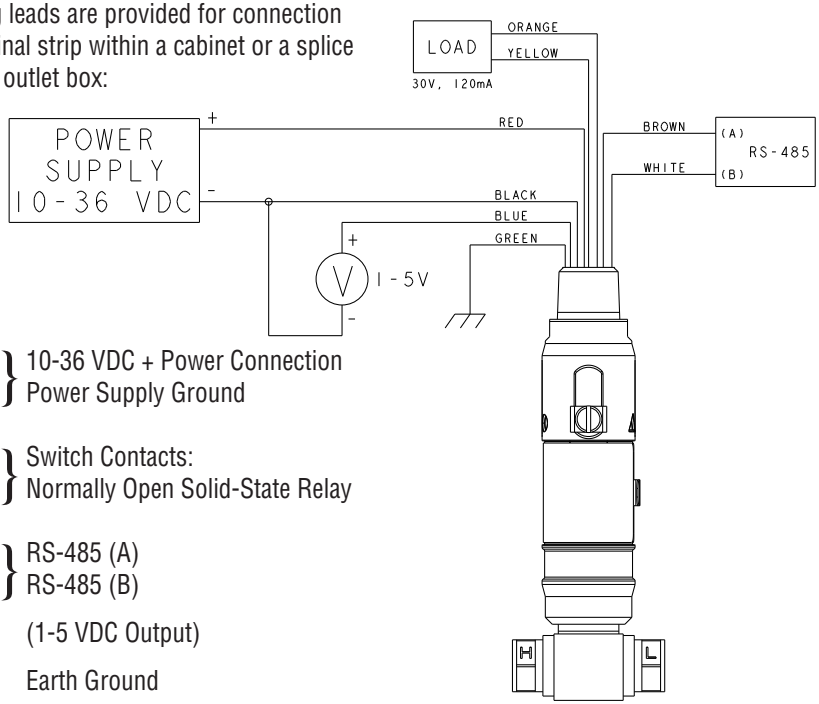

Red (+) } 10-36 VDC + Power Connection
Black (–) } Power Supply Ground

Orange } Switch Contacts:
Yellow } Normally Open Solid-State Relay

Brown } RS-485 (A)
White } RS-485 (B)

Blue (1-5 VDC Output)

Green Earth Ground

Bare Drain Wire - Connected to Earth Ground (trimmed at factory)

Drawing 0091546

NOTE: An external ground screw is included for additional earth ground connection.

Switch Operation

The 815DT switch output is a solid state, normally open relay that is rated to 30V, 120mA. This switch can be configured nine different ways depending on your application requirements, as noted below. Specific switch action can be requested at the time of order. In all nine configurations, the fail-safe state for the 815DT switch output will be open (i.e., if power is removed from the 815DT, the switch contacts will open automatically). The 815DT has a 0.25% URL switch set point accuracy.

Switch Output Default – Mode 3 is the default configuration for the 815DT switch output. In this mode the switch output is closed when the process pressure is within a user selectable range and open when the pressure is outside of these boundaries. This is designed for applications where there is a known acceptable operating pressure range. For example, the “window” could be set for an acceptable operating range of 50PSI to 150PSI. The 815DT switch output will be closed when the pressure being monitored is between 50 and 150 PSI. If the pressure goes below 50PSI or above 150PSI, the 815DT switch output will open (See ❸, page 5).

Form 1588 (05.26) ©SOR Inc.

The 815DT switch can be configured nine different ways:

❶ Off
❷ Windowed, Normally-Open
❸ Windowed, Normally-Closed
❹ Single Point, Normally-Open (Close on Rise/Open on Fall)
❺ Single Point, Normally-Closed (Open on Rise/Close on Fall)
❻ PWM (Pulse Width Modulation), Pulsed Low
❼ PWM (Pulse Width Modulation), Pulsed High
❽ Dead Band, Normally-Open
❾ Dead Band, Normally-Closed

❷ Windowed, Normally-Open

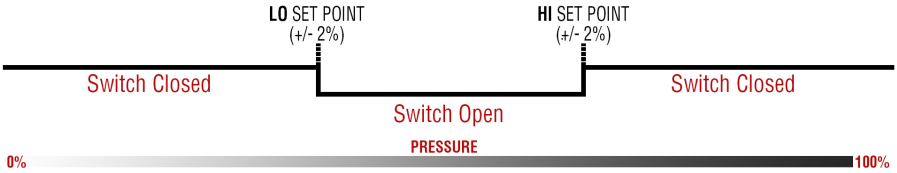

In this configuration, the switch output will be open when the process pressure is within a user selectable range and closed when the pressure is outside of these boundaries. This is designed for applications where there is a known acceptable operating pressure range.

❸ Windowed, Normally-Closed

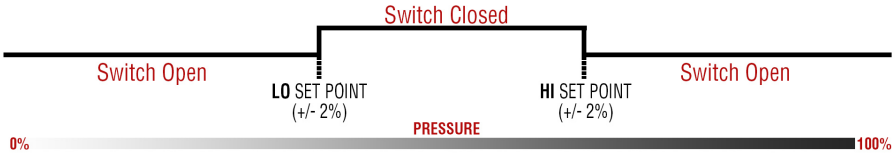

In this configuration, the switch output will be closed when the process pressure is within a user selectable range and open when the pressure is outside of these boundaries. This is designed for applications where there is a known acceptable operating pressure range.

❹ Single Point, Normally-Open (Close on Rise/Open on Fall)

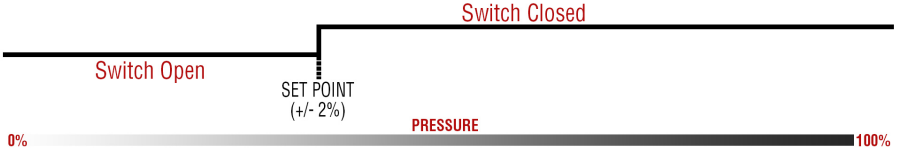

In this configuration, the switch output will be open for pressures less than the selected setpoint. The switch output would then be closed for pressures greater than the setpoint.

❺ Single Point, Normally-Closed (Open on Rise/Close on Fall)

In this configuration, the switch output will be closed for pressures less than the selected setpoint. The switch output would then be open for pressures greater than the setpoint.

❻ Pulse Width Modulation - Pulsed Lo

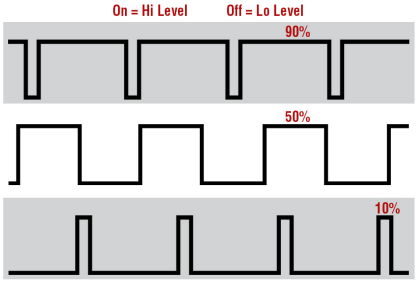

❼ Pulse Width Modulation - Pulsed Hi

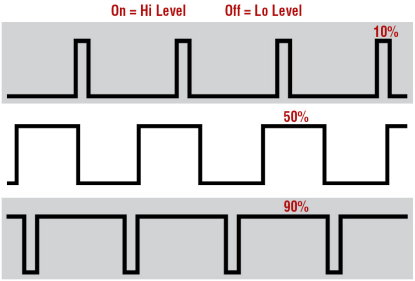

❽&❾ Dead Band

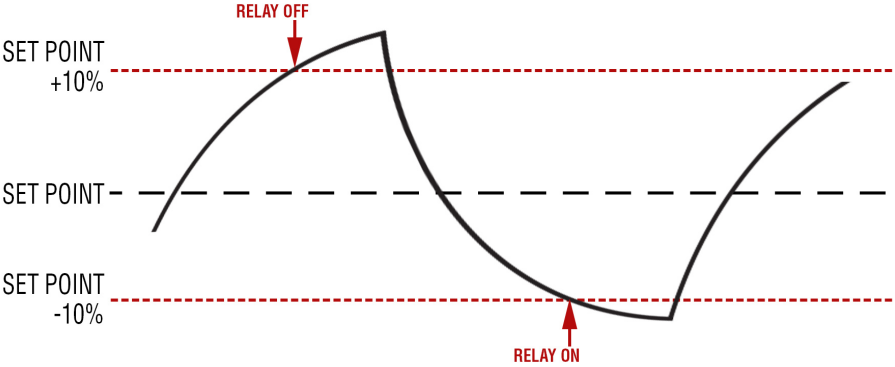

The diagram above depicts an adjustable dead band. Dead band is the range through which an input can be varied without initiating an observable response. Dead band is usually expressed in percent of span.

EXAMPLE: A 20% total dead band is applied to the setpoint of a monitored parameter. The relay will turn on and off as indicated in the graph above.

Form 1588 (05.26) ©SOR Inc.

Device Variables and Fault Current Indicators

The table below contains a short description of the four 815DT device variables.

Device Definition Table		
Variables	Value	Default Unit
Primary Variable (PV)	Pressure	PSI
Secondary Variable (SV)	Temperature	Degrees Celcius
Third Variable (TV)	Loop voltage	Volts
Fourth Variable (FV)	Dynamic	n/a

Under normal operating conditions, the analog output signal of the 815DT will remain between 4mA and 20mA. In the event that the pressure goes beyond the normal operating range of the device or in a fault condition, the 815DT will indicate the condition on the 4-20 mA loop. The table below summarizes the 815DT loop current with the associated fault indication.

Fault Current Indication	
Loop Current	Description
3.6 mA	Fault Indication (Configurable: 3.6 mA or 21.0 mA)
3.8 mA	Low limit of output range
20.5 mA	High limit of output range
21.0 mA	Fault Indication (Configurable: 3.6 mA or 21.0 mA)

Configuration with External Magnetic Targets

As a standard option, each 815DT includes external magnetic targets for simple calibration of the zero and the span. Located on the casting is a circle (O) for setting the zero and a triangle (Δ) for setting the span. The magnetic targets provide a convenient method for calibrating the 4-20mA output in the field.

Setting the Zero

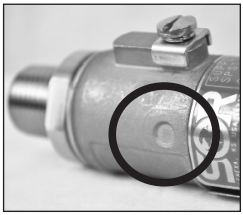

1. Depending on the desired zero value, the 815DT will either need to be connected to an adjustable pressure source or exposed to the atmosphere.
2. Bring the pressure to the desired zero value.
3. Touch the circle (O) target with a magnet for 3 seconds.
4. The transmitter output will change to 4mA indicating the zero has been calibrated successfully.

Setting the Span

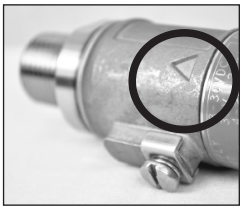

1. Connect the 815DT to an adjustable pressure source.
2. Bring the pressure to the desired span value.
3. Touch the triangle (Δ) target with a magnet for 3 seconds.
4. The transmitter output will change to 20mA indicating the span has been calibrated successfully.

Test Mode

1. If a magnet is applied to both the zero (O) and span (Δ) targets at the same time for 3 seconds the device will enter test mode.
2. While in test mode the 815DT will output a signal of 12mA continuously for 30 seconds.
3. This feature can be used to verify the 815DT is properly connected to and communicating with the system.

Form 1588 (05.26) ©SOR Inc.

Configuration with HART Communicator

4-20 mA Output

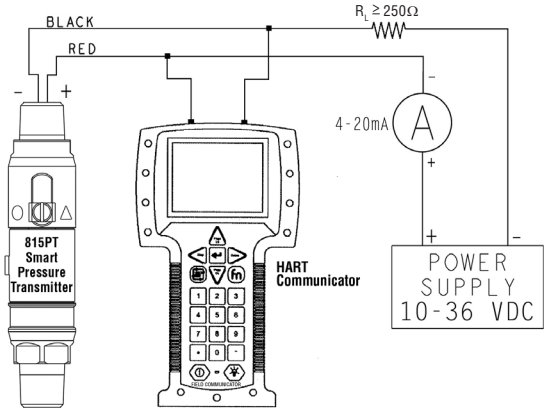

1-5 VDC Output

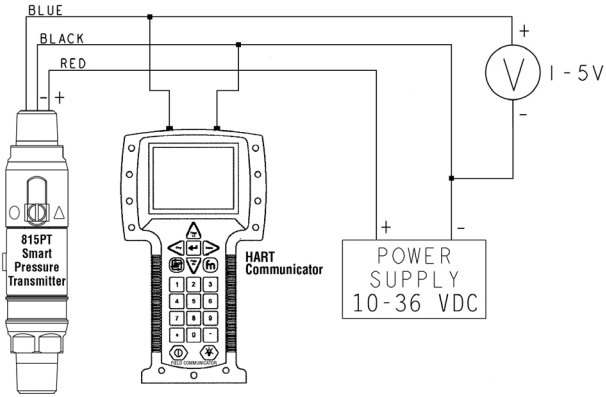

HART Commands

The following pages summarize all HART commands currently supported by the 815PT.

HART Command	Description	Command Data		Command Reply Data	
		Byte	Description	Byte	Description
0	Read unique identifier	Read only		0	Always 254
				1-2	Device type code
				3	Number of preambles
				4	Universal command revision
				5	Transmit-specific command revision
				6	Software revision
				7	Hardware revision
				8	Device function flags
				9-11	Device ID number
				12	Minimum number of preambles
				13	Maximum number of preambles

HART Command	Description	Command Data		Command Reply Data	
		Byte	Description	Byte	Description
0 (cont)	Read unique identifier	Read only		14-15	Configuration change counter
				16	Extended field device status
				17-18	Manufacturer ID
				19-20	Private label distributor code
				21	Device profile
1	Read primary variable	Read only		0	PV units code
				1-4	PV
2	Read current/ voltage and percent of range	Read only		0-3	Current (mA) or voltage (V)
				4-7	Percent of range
3	Read dynamic variables and loop current	Read only		0-3	"Current (mA) or voltage (V)
				4	PV units code
				5-8	PV
				9	SV units code
				10-13	SV
				14	TV units code
				15-18	TV
				19	FV units code
				20-23	FV
6	Write polling address	0	Polling address	0	Polling address
		1	Loop Current Mode	1	Loop Current Mode
7	Read loop configuration	Read only		0	Polling address
				1	Loop Current Mode
8	Read dynamic variable class	Read only		0	PV class
				1	SV class
				2	TV class
				3	FV class
9	Read device variables with status	0	Device variable code slot 0	0	Slot 0: Device variable code
		1	Device variable code slot 1	1	Slot 0: Device variable class
		2	Device variable code slot 2	2	Slot 0: Units code
		3	Device variable code slot 3	3-6	Slot 0: Device variable value
		4	Device variable code slot 4	7	Slot 0: Device variable status
		5	Device variable code slot 5	8	Slot 1: Device variable code

Form 1588 (05.26) ©SOR Inc.

HART Command	Description	Command Data		Command Reply Data	
		Byte	Description	Byte	Description
9 (cont)	Read device variables with status	6	Device variable code slot 6	9	Slot 1: Device variable class
		7	Device variable code slot 7	10	Slot 1: Units code
				11-14	Slot 1: Device variable value
				15	Slot 1: Device variable status
				16	Slot 2: Device variable code
				17	Slot 2: Device variable class
				18	Slot 2: Units code
				19-22	Slot 2: Device variable value
				23	Slot 2: Device variable status
				24	Slot 3: Device variable code
				25	Slot 3: Device variable class
				26	Slot 3: Units code
				27-30	Slot 3: Device variable value
				31	Slot 3: Device variable status
				32	Slot 4: Device variable code
				33	Slot 4: Device variable class
				34	Slot 4: Units code
				35-38	Slot 4: Device variable value
				39	Slot 4: Device variable status
				40	Slot 5: Device variable code
				41	Slot 5: Device variable class
				42	Slot 5: Units code
				43-46	Slot 5: Device variable value
				47	Slot 5: Device variable status
				48	Slot 6: Device variable code
				49	Slot 6: Device variable class
				50	Slot 6: Units code
				51-54	Slot 6: Device variable value
				55	Slot 6: Device variable status
				56	Slot 7: Device variable code
				57	Slot 7: Device variable class
				58	Slot 7: Units code
				59-62	Slot 7: Device variable value
				63	Slot 7: Device variable status
				64-67	Timestamp

HART Command	Description	Command Data		Command Reply Data	
		Byte	Description	Byte	Description
11	Read unique identifier associated with tag	0-5	Device tag	0	Always 254
				1	Manufacturer ID
				2	Device type code
				3	Number of preambles
				4	Universal command revision
				5	Transmit-specific command revision
				6	Software revision
				7	Hardware revision
				8	Device function flags
				9-11	Device ID number
				12	Minimum number of preambles
				13	Maximum number of preambles
				14-15	Configuration change counter
				16	Extended field device status
12	Read message	Read only		0-2	Device message
13	Read tag, descriptor, date	Read only		0-5	Tag
				6-17	Descriptor
				18-20	Date (dd-mm-yyyy)
14	Read PV sensor information	Read only		0-2	Sensor serial number
				3	Units code for sensor limits and minimum span
				4-7	Upper sensor limit
				8-11	Lower sensor limit
				12-15	Minumum span
15	Read output information	Read only		0	Alarm select code
				1	Transfer function code
				2	PV/range units code
				3-6	Upper range value
				7-10	Lower range value
				11-14	Damping value (sec)
				15	Write-protect code
				16	Private-label distributor code
				17	PV analog channel flags
16	Read final assembly number	Read only		0-2	Final assembly number
17	Write message	0-2	Message	0-2	Message

Form 1588 (05.26) ©SOR Inc.

HART Command	Description	Command Data		Command Reply Data	
		Byte	Description	Byte	Description
18	Write tag, descriptor, date	0-5	Tag	0-5	Tag
		6-17	Descriptor	6-17	Descriptor
		18-20	Date (dd-mm-yyyy)	18-20	Date (dd-mm-yyyy)
19	Write final assembly number	0-2	Final assembly number	0-2	Final assembly number
20	Read long tag	Read only		0-31	Long tag
21	Read unique identifier associated with long tag	0-31	Long tag	0	Always 254
				1	Manufacturer ID
				2	Device type code
				3	Number of preambles
				4	Universal command revision
				5	Transmit-specific command revision
				6	Software revision
				7	Hardware revision
				8	Device function flags
				9-11	Device ID number
				12	Minimum number of preambles
				13	Maximum number of preambles
				14-15	Configuration change counter
				16	Extended field device status
22	Write long tag	0-31	Long tag	0-31	Long tag
33	Read device variables	0	Transmit variable code slot 0	0	Transmit variable code slot 0
		1	Transmit variable code slot 1	1	Units code slot 0
		2	Transmit variable code slot 2	2-5	Variable slot 0
		3	Transmit variable code slot 3	6	Transmit variable code slot 1
				7	Units code slot 1
				8-11	Variable slot 1
				12	Transmit variable code slot 2
				13	Units code slot 2
				14-17	Variable slot 2
				18	Transmit variable code slot 3
				19	Units code slot 3
				20-23	Variable slot 3

HART Command	Description	Command Data		Command Reply Data	
		Byte	Description	Byte	Description
34	Write PV damping value	0-3	Dampaing value (seconds)	0-3	Dampaing value (seconds)
35	Write PV range values	0	Range units code	0	Range units code
		1-4	Upper range value	1-4	Upper range value
		5-8	Lower range value	5-8	Lower range value
36	Set PV as upper range value	None		Write only	
37	Set PV as lower range value	None		Write only	
38	Reset configuration changed flag	0-1	Configuration change flag	0-1	Configuration change flag
40	Enter/Exit fixed current mode	0-3	Current (mA), 0 to exit	0-3	Current (mA), 0 to exit
41	Perform self test	None		Write only	
42	Perform device reset	None		Write only	
43	Set PV zero	None		Write only	
44	Write PV units	0	PV units code	0	PV units code
45	Trim loop current zero	0-3	Trim loop current zero value	0-3	Trim loop current zero value
46	Trim loop current gain	0-3	Trim loop current gain value	0-3	Trim loop current gain value
47	Write PV transfer function	0	Transfer function code	0	Transfer function code
48	Read additional device status	0	Device-Specific Status Byte 0	0	Device-Specific Status Byte 0
		1	Device-Specific Status Byte 1	1	Device-Specific Status Byte 1
		2	Device-Specific Status Byte 2	2	Device-Specific Status Byte 2
		3	Device-Specific Status Byte 3	3	Device-Specific Status Byte 3
		4	Device-Specific Status Byte 4	4	Device-Specific Status Byte 4

Form 1588 (05.26) ©SOR Inc.

HART Command	Description	Command Data		Command Reply Data	
		Byte	Description	Byte	Description
48 (cont)	Read additional device status	5	Device-Specific Status Byte 5	5	Device-Specific Status Byte 5
		6	Extended Device Status dataTy	6	Extended Device Status dataTy
		7	Device Operation Mode	7	Device Operation Mode
		8	Standardized Status 0	8	Standardized Status 0
		9	Standardized Status 1	9	Standardized Status 1
		10	Analog Channel Saturated data	10	Analog Channel Saturated data
		11	Standardized Status 2	11	Standardized Status 2
		12	Standardized Status 3	12	Standardized Status 3
		13	Analog Channel Fixed	13	Analog Channel Fixed
		14	Device-Specific Status Byte 6	14	Device-Specific Status Byte 6
		15	Device-Specific Status Byte 7	15	Device-Specific Status Byte 7
		16	Device-Specific Status Byte 8	16	Device-Specific Status Byte 8
		17	Device-Specific Status Byte 9	17	Device-Specific Status Byte 9
		18	Device-Specific Status Byte 10	18	Device-Specific Status Byte 10
		19	Device-Specific Status Byte 11	19	Device-Specific Status Byte 11
		20	Device-Specific Status Byte 12	20	Device-Specific Status Byte 12
		21	Device-Specific Status Byte 13	21	Device-Specific Status Byte 13
		22	Device-Specific Status Byte 14	22	Device-Specific Status Byte 14
		23	Device-Specific Status Byte 15	23	Device-Specific Status Byte 15
		24	Device-Specific Status Byte 16	24	Device-Specific Status Byte 16

HART Command	Description	Command Data		Command Reply Data	
		Byte	Description	Byte	Description
53	Write device variable units				
59	Write number of response preambles	1	Number of response preambles	1	Number of response preambles
122	Write manufacturer device type code	0-1	Manufacturer device type code	0-1	Manufacturer device type code
123	Write device ID code	0-2	Serial number	0-2	Serial number
128	Device information	Read only		0-1	Main product ID
				1-2	Main model ID
				3-6	Main serial number
				7	BSL firmware build
				8	BSL firmware version
				9	BSL firmware revision
				10	Firmware build
				11	Firmware version
				12	Firmware revision
				13-14	Sensor product ID
				15-16	Sensor model ID
				17-20	Sensor serial number
129	Device status	Read only		0	Overall unit status, invalid if set
				1	Pad
				2-5	Temperature
				6-9	AD5421 loop voltage
				10-13	VO_S voltage
				14-17	VREGOUT_S voltage

Form 1588 (05.26) ©SOR Inc.

HART Command	Description	Command Data		Command Reply Data	
		Byte	Description	Byte	Description
132	Device configuration	0	"Configuration part type: 3: Switch Output Mode 4: Zero/Span Switches Enabled 5: Loop Type 6: Loop Alarm Direction 7: Fixed Output Duration 8: Fixed Output Span Percentage 13: Switch Point Low 14: Switch Point High 15: PWM Frequency Minimum 16: PWM Frequency Maximum 17: PWM Duty Cycle Minimum 18: PWM Duty Cycle Maximum 19: Modbus Slave ID 20: Modbus Parity 21: Modbus Baud Rate 24: Current Loop Trim Offset 25: Current Loop Trim Gain 26: Voltage Loop Trim Offset 27: Voltage Loop Trim Gain"	Write only	
		1	Always 1		
		"Parts 3-6, 19-20: 2 Parts 7, 15-16, 24-25: 2-3 Parts 8, 13-14, 17-18, 21, 26-27: 2-5"	Configuration part value		
133		0	"Configuration part type: 3: Switch Output Mode 4: Zero/Span Switches Enabled 5: Loop Type 6: Loop Alarm Direction 7: Fixed Output Duration 8: Fixed Output Span Percentage 13: Switch Point Low 14: Switch Point High 15: PWM Frequency Minimum 16: PWM Frequency Maximum 17: PWM Duty Cycle Minimum 18: PWM Duty Cycle Maximum 19: Modbus Slave ID 20: Modbus Parity 21: Modbus Baud Rate 24: Current Loop Trim Offset 25: Current Loop Trim Gain 26: Voltage Loop Trim Offset 27: Voltage Loop Trim Gain"	"Parts 3-6, 19-20: 0 Parts 7, 15-16, 24-25: 0-1 Parts 8, 13-14, 17-18, 21, 26-27: 0-3"	Configuration part value

HART Command	Description	Command Data		Command Reply Data	
		Byte	Description	Byte	Description
134	Device configuration	0	"Configuration part type: 3: Pressure Point Zero 4: Pressure Point Span"	n/a	
		1	Always 1		
		2-5	Configuration part value		
135		0	"Configuration part type: 3: Pressure Point Zero 4: Pressure Point Span"	0-3	Configuration part value
139	Device history	0	"Unit history part type: 0: Unit on time (seconds) 1: Unit power ups 2: Low pressure (PSI) 3: High pressure (PSI) 4: Low temperature (°C) 5: High temperature (°C) 6: Low loop voltage (V) 7: High loop voltage (V) 8: Unit status flags"	0-3	Unit history part value
140	Read ignore status variable	Read only		UINT8	"0: Overall unit status not ignored 1: Overall unit status ignored"
141	Write ignore status variable	0	"0: Do not ignore overall unit status 1: Ignore overall unit status"	Write only	
180	Write number of points in transfer function	0	Number of points	0	Number of points
181	Read number of points in transfer function	Read only		0	Number of points
182	Write transfer function point data	0	Point number	0	Point number
		1-4	Pressure value	1-4	Pressure value
		5-8	Loop Current value	5-8	Loop Current value
183	Read transfer function point data	0	Point number	0	Point number
				1-4	Pressure value
				5-8	Loop Current value

Form 1588 (05.26) ©SOR Inc.

HART Command	Description	Command Data		Command Reply Data	
		Byte	Description	Byte	Description
200	Write password	0-6	Password	0-6	Access level
201	Enable/ Disable write protection	Read only		0	Write protect code
202	Change user password	0-6	New password	0-6	New password
203	Change service password	0-6	New password	0-6	New password
204	Return to default passwords	None		Write only	

Modbus Register Mapping

The following table summarizes the Modbus register mapping assignments for the 815DT.

Modbus Register	Register Definition	Read/Write	"Data Type"	Description
0	Loop current/voltage	R	Float	Current (mA)/Voltage (V)
4	PV unit	R	UINT8	PV units code
8	PV	R	Float	PV
12	SV unit	R	UINT8	SV units code
16	SV	R	Float	SV
20	TV unit	R	UINT8	TV units code
24	TV	R	Float	TV
28	FV unit	R	UINT8	FV units code
32	FV	R	Float	FV
36	Current and percent of range	R	Float	Percentage of range
40	Modbus slave ID	R/W	UINT8	Modbus Slave ID
44	Device Status	R	UINT32	Unit status flags
48		R	Float	Temperature
52		R	Float	AD5421 loop voltage
56		R	Float	VO_S voltage
60		R	Float	VREGOUT_S voltage
64	Device Information	R	UINT16	Main product ID
68		R	UINT16	Main model ID
72		R	UINT32	Main serial number
76		R	UINT8	BSL firmware build

Modbus Register	Register Definition	Read/Write	"Data Type"	Description
80		R	UINT8	BSL firmware version
84		R	UINT8	BSL firmware revision
88		R	UINT8	Firmware build
92		R	UINT8	Firmware version
96		R	UINT8	Firmware revision
100		R	UINT16	Sensor product ID
104		R	UINT16	Sensor model ID
108		R	UINT32	Sensor serial number
112	Device History	R	UINT32	Unit on time (seconds)
116		R	UINT32	Unit power ups
120		R	Float	Low pressure (PSI)
124		R	Float	High pressure (PSI)
128		R	Float	Low temperature (°C)
132		R	Float	High temperature (°C)
136		R	Float	Low loop voltage (V)
140		R	Float	High loop voltage (V)
144		R	UINT32	Status Flags
148	Set fixed output mode	R/W	Float	Percentage of span to write
152	Pressure point zero	R/W	Float	Pressure Point Zero
156	Pressure point span	R/W	Float	Pressure Point Span
160	Perform self test	W	n/a	Write only
Note:	All Modbus command data is sent and received as 4 bytes. For an eight-bit variable, the least significant byte contains the value.			

Factory Modbus Settings

The following summarizes the Modbus settings for the 815DT as shipped from the factory:

Slave ID:	1
Baud Rate:	19200
Data Bits:	8
Parity:	Even
Stop Bits:	1
Flow Control:	None

Form 1588 (05.26) ©SOR Inc.

Dimensions

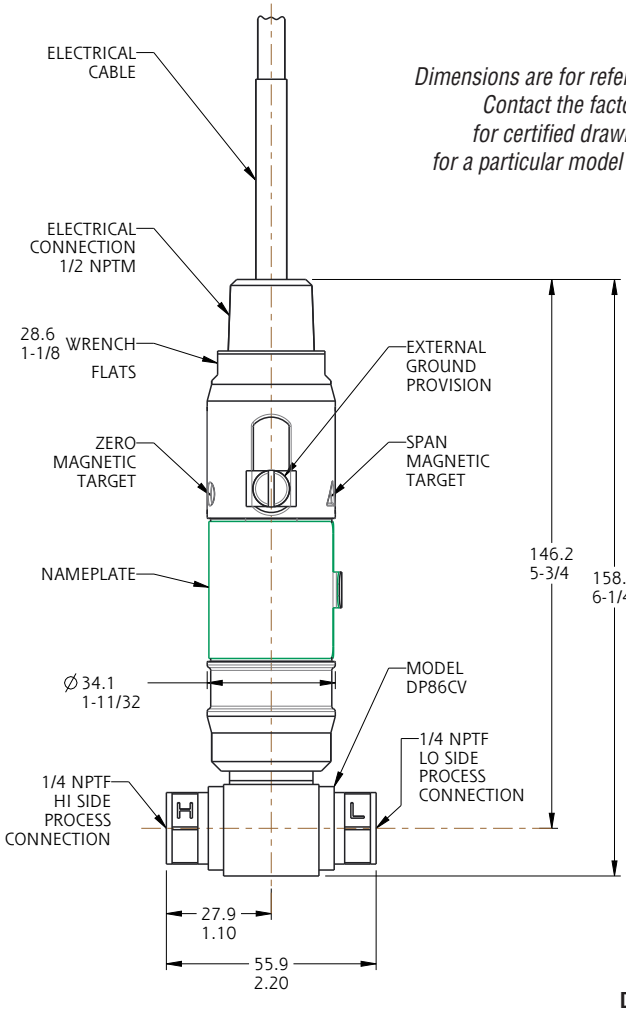

Dimensions are for reference only. Contact the factory for certified drawings for a particular model number.

Linear = mm/inches

Drawing 0091544

Maintenance

The 815DT contains no user serviceable parts and cannot be repaired on site. It must be returned to the factory. Disassembly of the instrument by unauthorized persons will invalidate the warranty. If there is a risk of debris accumulating in the pressure ports, they should be cleaned. Care and caution must be taken when cleaning the pressure port to prevent damage to the diaphragm.

ATEX/IECEx Marking Details

For ATEX/IECEx Certified Models

Drawing 0720600

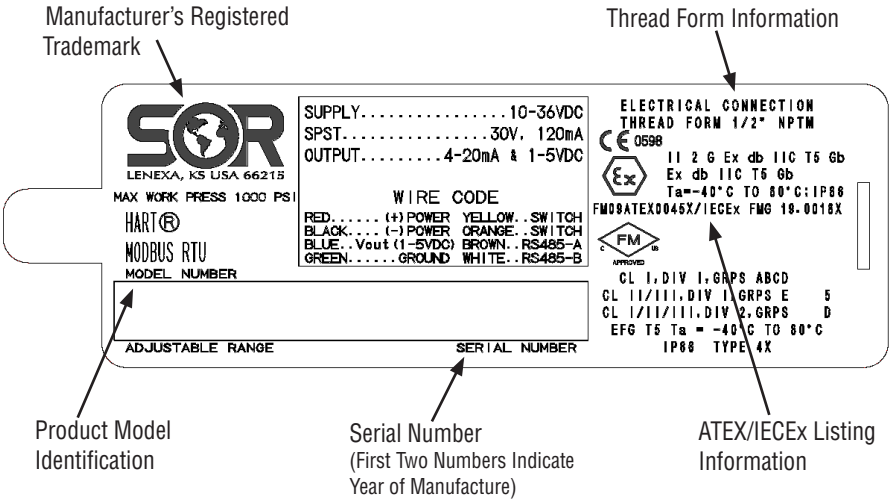

Special Condition for Safe Use

- Flamepath joints are not intended to be repaired

Form 1588 (05.26) ©SOR Inc.

EU Declaration of Conformity

CE

Product	**800 Series Electronic Pressure Transmitters**
Manufacturer **Place of Issue**	SOR Inc. 14685 West 105th Street Lenexa, Kansas 66215-2003 United States of America
Date of Issue	**August 8, 2025**
We declare under our sole responsibility that the above products conform to the following specifications and directives	ATEX Directive (2014/34/EU) EN 60079-0:2018, EN 60079-1:2014, IEC 60079-0:2017 EN 60529:1991 + A1:2000 + A2:2013, IEC 60079-1:2014-06 EMC Directive (2014/30/EU) IEC 61326-1, IEC 61000-4-2 IEC 61000-4-3, IEC 61000-4-4 IEC 61000-4-5, IEC 61000-4-6 IEC 61000-4-8
Carries the marking	Ex **II 2 G Ex db IIC T5 Gb, Ta + -40°C to +80°C** **IP66**
Reference documents	**FM 09 ATEX 0045** Issued September 29, 2009 **IECEx FMG 19.0018X** Issued February 11, 2020 **EMC Test Reports 7914-780, R072109-01-02A, R20130718-20** Issued July 31, 2025, September 24, 2009, October 17, 2013
ATEX Notified Body	**SGS Fimko Oy** (Notified Body No. 0598) Takomotie 8 Helsinki, 00380 Finland
Person responsible	Michael J. Bequette (VP of Engineering)

Michael J. Bequette

Engineered to Order with Off-the-Shelf Speed

SOR
14685 West 105th Street, Lenexa, KS 66215-2003
913-888-2630 ▪ 800-676-6794 USA ▪ 913-888-0767 FAX

Form 1445 (08.25) SOR Inc.

14685 West 105th Street, Lenexa, KS 66215 ■ 913-888-2630 ■ 800-676-6794 USA ■ SORInc.com

Form 1588 (05.26) ©SOR Inc.