MEASUREMENT AND CONTROL

SEE MORE AT SORInc.com

Request Quote

1500 Series Level Switches

The SOR® family of **1500 Series Mechanical Level Switches** answer industry's call for less expensive alternatives to the traditional chambered level switch. The 1500s are suitable for most any point level application.

Common Applications

- Separators
- Suction Scrubbers
- Dehydrators
- Refrigeration
- Re-injection
- Small Diameter Vessels
- High-Low Level Alarm
- Cooling Water Applications
- Wet Scrubbers
- Seal Pots
- Make-Up Water
- Vapor Recovery
- Overflow Protection
- Lube Oil Reservoirs
- Pump On - Pump Off
- Contaminated Water Applications

1510

1530

1540

1550

Features and Benefits

- **All Stainless Steel construction**
- **Standard product rating of 1500 psi @ -40 to 400°F (103 BAR @ -40 to 204°C)**
- **Minimum working temperature rating of -40°F**
- **5000 psi rating available with polypropylene float**
- **Complete isolation of the process from the switch – no o-rings or seals**
- **Horizontal switches may be oriented for high- or low-level action**
- **SOR products are certified to IEC 61508 for non-redundant use in SIL1 and SIL2 Safety Instrumented Systems for most models. For more details or values applicable to a specific product, see the Safety Integrity Level Quick Guide (Form 1528).**
- **5-year warranty**

SEPARATORS

Multiple separators are a common occurance in the natural gas industry. Even with raw gas wells, there is always condensate, water, or some other NGL that needs to be separated prior to transporting for processing.

There are a number of separation technologies and all of them require collection of these liquids after separation. Some are simple gravity separators, while some can be quite elaborate. **Regardless of the separation method, SOR 1500 Series Level Switches fit the application.**

Inlet separator

As raw gas enters large vessels in the plant called "inlet separators", condensate (natural gasoline) and water is removed from the main gas stream. An SOR 1510 level switch is mounted in a separator at, or about, the same elevation as the inlet pipe that brings in the raw oil and gas mixture. A shut-off valve is installed in the inlet piping that is usually kept open by air pressure and allows the fluid mixture to enter the inlet separator. When liquid level reaches the float on the 1510 the switch actuates.

Upon actuation, a signal is sent to (for example) a solenoid valve, sometimes via a PLC, which shuts off the air normally routed to the valve. With the air supply cut off, the valve closes and fluid flow to the separator comes to a halt.

When an SOR 1540 is used, the air supply reaches the shut-off valve via the pneumatic level switch. When actuated, the air is blocked and the shut-off valve closes because of a lack of air supply.

In both cases, a separate level controller works in conjunction with a dump valve that drains the liquid from the inlet separator.

Blow case separator

Another specific separator application where 1500 series level switches excel is controlling a blowcase separator upstream from a compressor.

A blowcase separator is essentially two vessels connected vertically. Gas flows into the upper vessel (compressor) and gravity pulls liquids down into the lower vessel (blowcase). When the blowcase is full, a 1500 series switch actuates and closes a valve between the two tanks. A second valve opens and allows the compressed gas to move from the compressor back down into the blowcase. This forces the accumulated liquids out into the pipeline, downstream from the compressor.

A second 1500 series switch is often used as a low level to reset the system when the blowcase empties. Both the 1510 and 1540 may be used with equal effectiveness; the one you choose depends only on the application and your preference.

Glycol dehydrator

Often, a glycol dehydrator is necessary for removal of tiny water droplets from natural gas if the water was not completely extracted with the initial separator. The process works by "dehydrating" the natural gas; glycol dehydration involves putting glycol in contact with a stream of natural gas that contains water. The glycol absorbs the water from the wet gas stream, becomes heavier and sinks to the bottom of the contactor where it is expelled. The natural gas is then easily routed out of the dehydrator and the glycol/water solution is sent to a special boiler that evaporates the water, allowing the glycol to be recycled and dehydrate the natural gas once again.

An SOR 1500 series mechanical level switch is installed on the contactor to monitor glycol/water levels. When mounted below the wet gas inlet, it prevents the glycol/water level from rising above it. If the level reaches the switch, a signal is sent to a solenoid valve that works in conjunction with a dump valve and drains the liquid from the dehydrator.

Form 500 (07.26) ©SOR Inc.

1500 Series
Level Switches

Model Selection

The first step to creating your model string is to determine whether an electronic or pneumatic switch is needed, and whether a side or top mount switch is needed. Refer to the pages mentioned below for the different options for selecting the right technology for a specific application.

1510 Side Mounted Level Switch 4

is a horizontally mounted, float-operated level switch suitable for plant and OEM applications where open or closed contacts are required to signal presence or absence of liquid at a discrete level. The float extension arm moves a magnet which actuates (deactuates) a hermetically sealed reed switch. Actuation (deactuation) can be reversed by rotating the unit 180 degrees.

1530 Side Mounted Pneumatic Level Switch 7

is a horizontally mounted, float-operated level switch suitable for plant and OEM applications where pneumatic valve operation is required to signal presence or absence of liquid at a discrete level. The float extension arm moves a magnet which actuates (deactuates) a pilot valve to operate a pneumatic amplifier. Actuation (deactuation) can be reversed by rotating the unit 180 degrees.

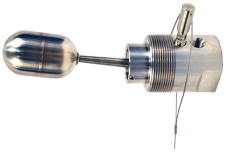

1540 Side Mounted Pneumatic Level Switch 9

is a horizontally mounted, float-operated level switch suitable for plant and OEM applications where pneumatic valve operation is required to signal presence or absence of liquid at a discrete level. The float arm moves a magnet which in turn moves a shuttle that either blocks or allows pilot pressure to pass and operate ancillary equipment. Actuation (deactuation) can be reversed by rotating the unit 180 degrees or switching inlet connections. The supply media must be filtered and oil free. Air is the usual media; however, any dry, filtered gas can be used.

1550 Top Mounted Level Switch 11

is a vertically mounted, float-operated level switch suitable for plant and OEM applications where open or closed contacts are required to signal presence or absence of liquid at a discrete level. The float stem moves a magnet that actuates (deactuates) a hermetically sealed reed switch.

Popular Add-Ons 14

- Manual Check
- Extended Float
- Interface Detection
- Chambers

1500 Series Level Switches

1510 Side Mounted Level Switch

1510 is a horizontally mounted, float-operated level switch suitable for plant and OEM applications where open or closed contacts are required to signal presence or absence of liquid at a discrete level. The float extension arm moves a magnet which actuates (deactuates) a hermetically sealed reed switch. Actuation (deactuation) can be reversed by rotating the unit 180 degrees.

Product Specifications

Mounting	
Orientation	Horizontal mount only
Connection Size	1-1/2" through 6"
Connection Type	NPT(M) or Flanged
Maximum Process Pressure*	up to 5000 psi (345 bar)
Process Temperature Range*	-40 to 400°F (-40 to 204°C)
Electrical	
Switch Type	Hermetically sealed reed switch with 18" 20 AWG wire leads
Housing	Class I, Groups A, B, C & D; Divisions 1 & 2 with CS option
Relay Housing	Class I, Groups C & D; Divisions 1 & 2 with CS option
Connection Size	1/2" NPT(F)
Minimum Specific Gravity	0.45
Design Code	ANSI B31.3
Weight	Approximately 6 lbs. (3 kg)
Agency Listing*	CSA Certified (US & Canada) and ANSI/ISA 12.27.01, ATEX and IEC or INMETRO approved (optional). See page 2. Certifications available upon request.

Safety Certified to IEC 61508 (SIL)
SOR products are certified to IEC 61508 for non-redundant use in SIL1 and SIL2 Safety Instrumented Systems for most models. For more details or values applicable to a specific product, see the Safety Integrity Level Quick Guide (Form 1528).

*Agency certifications may affect ratings. See Accessories for details.

Dimensions

Design and specifications are subject to change without notice.
For latest revision, see sorinc.com.

Linear = mm/inches
Drawing 0390693

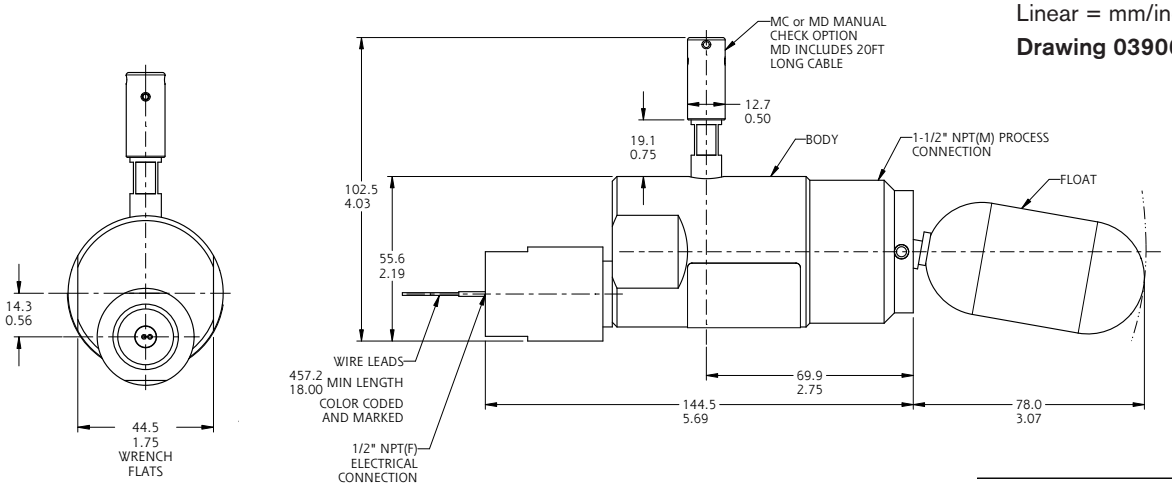

1 1/2" body shown. For all others, please consult factory.

Form 500 (07.26) ©SOR Inc.

1500 Series Level Switches

1510 Side Mounted Level Switch

Below is the SOR quick select model number tree that provides you with all the options to configure and order a product for your application. You must select a designator for each component.

Housing 5

Electronic Switch Housing: Class I, Groups A, B, C, D; Divisions 1 & 2 with CS option	ES

Switch Mechanisms 4

Amperages based on resistive loads

General Purpose	SPST	0.9A @ 110 VAC Max 3A @ 28 VDC Max 3 Watt Minimum	W9
General Purpose	SPDT	0.9A @ 110 VAC Max 3A @ 28 VDC Max 3 Watt Minimum	W1
Low Power	SPST	25 Watts Max	L9
Low Power	SPDT	25 Watts Max	L1

Float Material 3

316/316LSS (Standard)	1500 psig (103 bar) –40 to 400°F (–40 to 204°C)	C
Monel	900 psig (62 bar) –40 to 400°F (–40 to 204°C)	M
Polypropylene	5000 psig (345 bar) –40 to 190°F (–40 to 88°C)	S

Process Connections 2

Threaded:	1 1/2" NPT(M)	G5A
	2" NPT(M)	G2A
Flanged: (Available with 316SS body only)		
May affect process pressure rating.	2 1/2" 150#	G7C
	300#	G7D
	600#	G7E
	3" 150#	G3C
	300#	G3D
	600#	G3E
	4" 150#	G4C
	300#	G4D
	6" 150#	G6C
	300#	G6D

Body Material 1

303SS (Standard)	B
316 Stainless Steel	C

6 Optional Accessories

Insert accessory designator(s) as needed

CK*	ATEX and IECEx dual approved (not available with L9 or W9 switch mechanism). Ex d IIC Ga/Gb T4 (-40°C < Ta < +90°C), T5 (-40°C < Ta < +75°C) and Ex ia IIC T3 (-40°C < Ta < +125°C)
CL*	ATEX and IECEx approved. Ex ia IIC T3 (-40°C < Ta < +125°C)
CR	3/4" NPT(F) conduit connection
CS*	CSA Certified, US and Canada. Class 1, Group A, B, C, D; Divisions 1 & 2. For relay option; Class 1, Group C & D, Divisions 1 & 2. Single seal ambient & process temperatures -40°C to +125°C. Additional seal not required.
CV	Canadian Registration Number (CRN). Consult the factory for applicable pressure and additional information
HB	Universal terminal box, 1/2" NPT(F), 316SS explosion proof. ATEX/IECEx certified Ex db IIC T4, T5, T6 Gb
HBME	Universal terminal box, M20 x 1.5(F), 316SS explosion proof. ATEX/IECEx certified Ex db IIC T4, T5, T6 Gb
HT	Universal terminal box, 1/2" NPT(F), 316SS explosion proof. FM approved; CSA certified
MC**	Manual check accessory (uses Viton GLT o-rings - not available with polypropylene floats)
MD**	Manual check accessory (uses Viton GLT o-rings - not available with polypropylene floats) with 20' remote cable
MR	Mill Test Report
NC	NACE construction - MR0175 / ISO 15156. Available only with 316SS materials of construction
NM*	INMETRO approved. Ex ia IIC T3 (-40°C < Ta < +125°C)
RB***	24 VDC powered DPDT relay in explosion proof terminal box. Contact rating: 10 amps @ 115 VAC. Class I, Group C, D; Divisions 1 & 2. 3/4" NPT(M) conn. w/ 1/2" NPT(F) adapter
RC***	120 VAC powered DPDT relay in explosion proof terminal box. Contact rating: 10 amps @ 115 VAC. Class I, Group C, D; Divisions 1 & 2. 3/4" NPT(M) conn. w/ 1/2" NPT(F) adapter
RR	Tag, 316SS. (Attached with 304SS wire to housing. Stamped with customer specified tagging information. 2 lines, 18 characters and spaces per line).
TS****	Taiwan Safety Mark
TT	316SS nameplate permanently attached to housing. Stamped with customer specified tagging information.

* CK, CL, CS or NM option is required on all flange mounted units.
** Manufacturer limits on Viton GLT are -40 to 400°F.
*** Not available with L9 or L1 switch options.
**** Requires use of CK or CL option.

1510		-		-		-		-	ES	-	

1510 B - G5A - C - W9 - ES - MC Example Model No.

Test Certificates

	Certificates	D1	D2	C1	C3	C4	C5	C6	C7	B5	B6	B7
1510 Level Switch	Certificate of Origin	◆										
	Manufacturer's Certificate		◆									
	Calibration			◆						◆	◆	◆
	Inspection Report				◆					◆	◆	◆
	Compliance / Conformance					◆						◆
	Dielectric Test						◆			◆		
	Insulation Resistance							◆		◆	◆	
	QA Test Report								◆			

Replacement Parts

Description	Part Number
W9 - SPST Hermetically Sealed Switch Capsule	3130 - 106
W1 - SPDT Hermetically Sealed Switch Capsule	3130 - 245
W1 - SPDT Switch/Conduit Connection Assembly (CK option only)	3130 - 259
L9 - SPST Hermetically Sealed Switch Capsule	3130 - 107
L1 - SPDT Hermetically Sealed Switch Capsule	3130 - 244
L1 - SPDT Switch/Conduit Connection Assembly (CK option only)	3130 - 260
316/316LSS Float Assembly	3130 - 052
20' Remote Cable with two cable crimps*	3130 - 040
Manual Check Accessory (MC) (2" NPT only)*	9227 - 024
Manual Check Accessory with 20' remote cable (MD) (2" NPT only)*	9227 - 025
Manual Check Accessory (MC) (1 1/2" NPT only)*	9227 - 028
Manual Check Accessory with 20' remote cable (MD) (1 1/2" NPT only)*	9227 - 029

*Unit must have originally been supplied with MC or MD option.

Limited Warranty

SOR agrees to repair or replace any switch found to be defective in material or workmanship within five years from date of shipment. The limited warranty is valid only if the switch was installed in accordance with published factory installation instructions, operated within the design limitations stated on the nameplate, and returned to the factory for inspection, freight prepaid, within the warranty period. Contact the factory for return authorization. No claim for labor or consequential damages will be allowed.

Form 500 (07.26) ©SOR Inc.

1530 Side Mounted Pneumatic Level Switch

The 1530 is a horizontally mounted, float-operated level switch suitable for plant and OEM applications where pneumatic valve operation is required to signal presence or absence of liquid at a discrete level. The float extension arm moves a magnet which actuates (deactuates) a pilot valve to operate a pneumatic amplifier. Actuation (deactuation) can be reversed by rotating the unit 180 degrees.

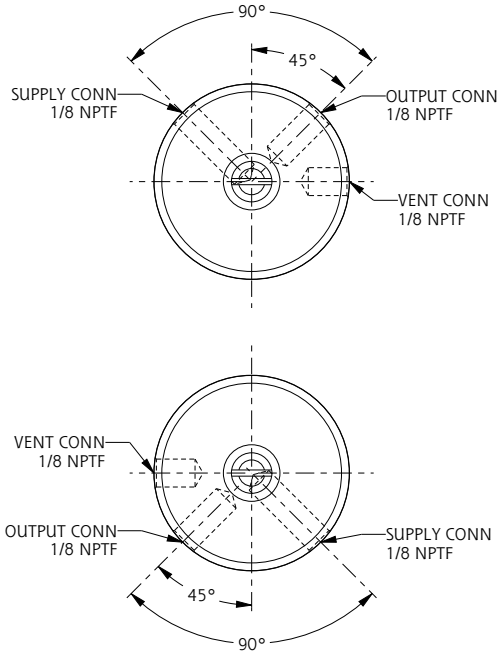

Product Specifications

Mounting	
Orientation	Horizontal mount only
Connection Size	2" NPT(M) Standard
Flange Options Available	
Maximum Process Pressure	
Float Material	
316/316LSS	1500 psi (103 bar)
Monel	900 psi (62 bar)
Polypropylene	5000 psi (345 bar)
Process Temperature Range	
Float Material	
316/316LSS	–40 to 400°F (–40 to 204°C)
Monel	–40 to 400°F (–40 to 204°C)
Polypropylene	–40 to 190°F (–40 to 88°C)
Supply Pressure Range	20 to 60 psi (1.4 to 4.1 bar)
Supply Pressure Connection Size	1/8" NPT(F)
Minimum Specific Gravity	0.60
Design Code	ANSI B31.3
Weight	Approximately 6 lbs. (3 kg)

If supply pressure medium is natural gas, a filter/regulator is suggested on the supply line, and the valve vent port should be piped to a safe area.

Dimensions

Design and specifications are subject to change without notice.
For latest revision, see sorinc.com.

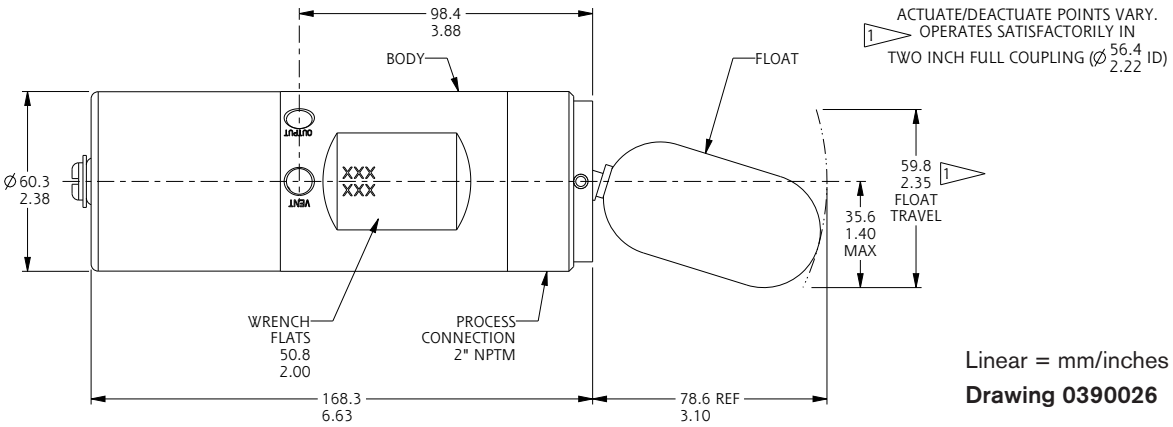

Linear = mm/inches
Drawing 0390026

Below is the SOR quick select model number tree that provides you with all the options to configure and order a product for your application. You must select a designator for each component.

4 Switch Mechanism

J0	Pneumatic Switch

5 Housing

PS	Pneumatic Switch Housing

3 Float Material

316/316LSS (Standard)	1500 psig (103 bar) −40 to 400°F (−40 to 204°C)	C
Monel	900 psig (62 bar) −40 to 400°F (−40 to 204°C)	M
Polypropylene	5000 psig (345 bar) −40 to 190°F (−40 to 88°C)	S

2 Process Connections

	2” NPT(M)	G2A
Flanged:	2 1/2” 150#	G7C
(Available with	300#	G7D
316SS body only)	600#	G7E
May affect process	3” 150#	G3C
pressure rating.	300#	G3D
	600#	G3E
	4” 150#	G4C
	300#	G4D
	6” 150#	G6C
	300#	G6D

1 Body Material

303SS (Standard)	B
316 Stainless Steel	C

6 Optional Accessories

Insert accessory designator(s) as needed

BB	Wetted parts are cleaned for industrial oxygen service
CV	Canadian Registration Number (CRN). Consult the factory for applicable pressure and additional information.
MR	Mill Test Report
NC	NACE construction - MR0175 / ISO 15156. Available only with 316SS materials of construction
PP	Tag, fiber. Attached with plastic wire to housing. Stamped with customer specified tagging information.
RR	Tag, 316SS. (Attached with 304SS wire to housing. Stamped with customer specified tagging information. 2 lines, 18 characters and spaces per line).
TT	316SS nameplate permanently attached to housing. Stamped with customer specified tagging information.
VV	Fungicidal varnish. Covers exterior except working parts.

1530 [ ] - [ ] - [ ] - J0 - PS - [ ]

1530 B - G2A - C - J0 - PS - TT Example Model No.

Certificates

	Certificates	D1	D2	C1	C3	C4	C7	B7
1530 Pneumatic Level Switch	Certificate of Origin	◆						
	Manufacturer’s Certification		◆					
	Calibration			◆				◆
	Inspection Report				◆			◆
	Compliance / Conformance					◆		◆
	QA Test Report						◆	

Replacement Parts

Description	Part Number
Pneumatic Relay Assembly	3130 - 114
316/316LSS Float Assembly	3130 - 052

Limited Warranty

SOR agrees to repair or replace any switch found to be defective in material or workmanship within five years from date of shipment. The limited warranty is valid only if the switch was installed in accordance with published factory installation instructions, operated within the design limitations stated on the nameplate, and returned to the factory for inspection, freight prepaid, within the warranty period. Contact the factory for return authorization. No claim for labor or consequential damages will be allowed.

Form 500 (07.26) ©SOR Inc.

1540 Side Mounted Pneumatic Level Switch

1540 is a horizontally mounted, float-operated level switch suitable for plant and OEM applications where pneumatic valve operation is required to signal presence or absence of liquid at a discrete level. The float arm moves a magnet which in turn moves a shuttle that either blocks or allows pilot pressure to pass and operate ancillary equipment. Actuation (deactuation) can be reversed by rotating the unit 180 degrees or switching inlet connections (see below).

The supply media must be filtered and oil free. Air is the usual media; however, any dry, filtered gas can be used.

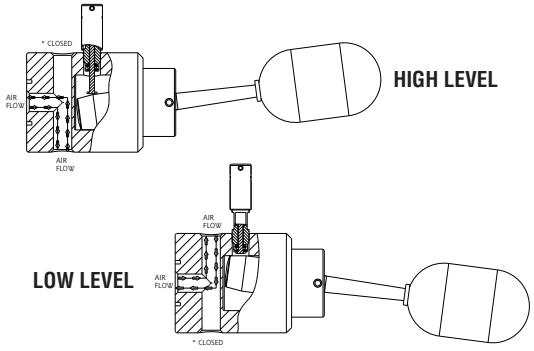

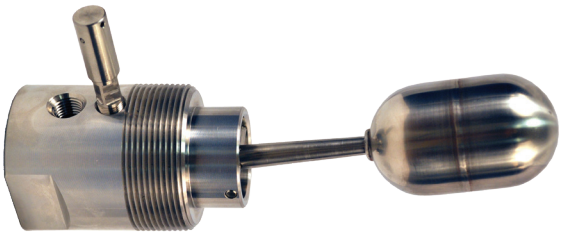

Product Specifications

Orientation	Horizontal mount only
Body Material	316 Stainless Steel
Connection Size	2" NPT(M)
I/O Connection	1/4" NPT(F)
Pilot (Supply) Pressure	0-30 psi (0-2 BAR) or 0-80 psi (0-5.5 BAR)
Flow Rate @ Max Pilot Pressure	60 SCFH (1.7 CMH)
Maximum Process Pressure	1500 psi (103 BAR)
Process Temperature Range	–40 to 400°F (–40 to 204°C)
Minimum Specific Gravity	0.65
Weight	3.5 lbs. (2 kg)

SCFH - Standard cubic feet per hour
CMH - Cubic meter per hour

Dimensions

The drawings & illustrations below show the manual check (MC or MD) option.

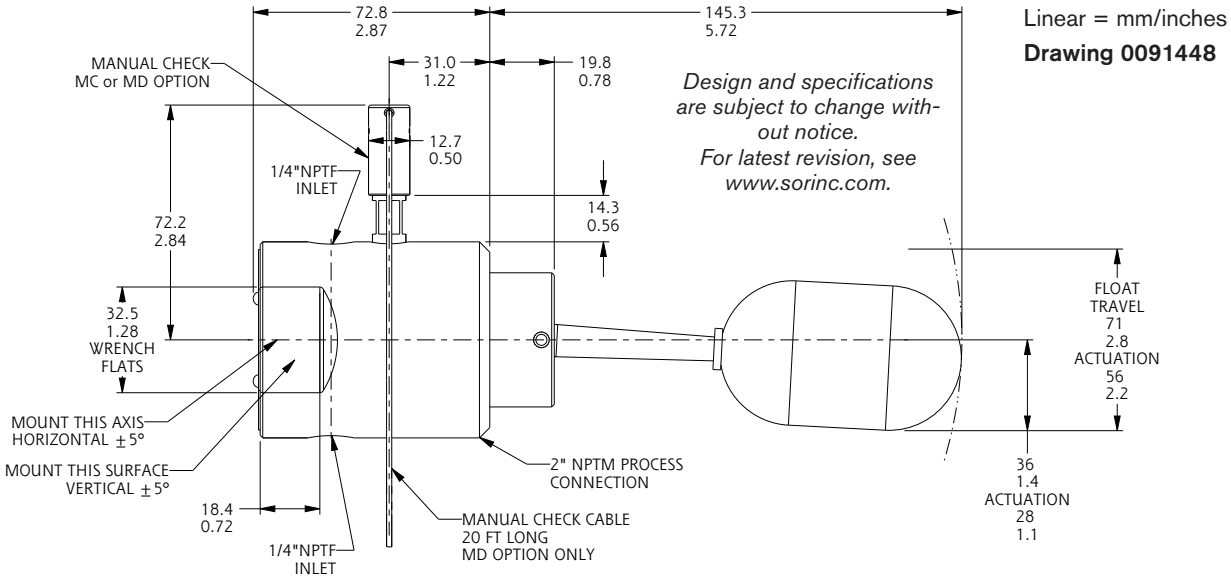

Design and specifications are subject to change without notice. For latest revision, see www.sorinc.com.

Linear = mm/inches
Drawing 0091448

1500 Series Level Switches

1540 Side Mounted Pneumatic Level Switch

Here is the SOR quick select model number tree that provides you with all the options to configure and order a product for your application. You must select a designator for each component.

5 Housing

PS — Pneumatic Switch Housing

4 Switches

J0 — Pilot (Supply) Pressure: 0-30 psi (0-2 BAR)
Flow Rate @ 30 psi Supply: 60 SCFH (1.7 CMH)

J1 — Pilot (Supply) Pressure: 0-80 psi (0-5.5 BAR)
Flow Rate @ 80 psi Supply: 60 SCFH (1.7 CMH)

3 Float Material

C — 316SS 1500 psig (103 bar)
-40 to 400°F (-40 to 204°C)

2 Process Connections

G2A — 2" NPT(M)

1 Body Material

C — 316 Stainless Steel

6 Optional Accessories

Insert accessory designator(s) as needed

BB	Wetted parts are cleaned for industrial oxygen service
CV	Canadian Registration Number (CRN). Consult the factory for applicable pressure and additional information.
MC*	Manual check accessory (uses Viton GLT o-rings)
MD*	Manual check accessory (uses Viton GLT o-rings) with 20' remote cable
MR	Mill Test Report
NC	NACE construction - MR0175 / ISO 15156
PP	Tag, fiber. Attached with plastic wire to housing. Stamped with customer specified tagging information.
RR	Tag, 316SS. (Attached with 304SS wire to housing. Stamped with customer specified tagging information. 2 lines, 18 characters and spaces per line).
TT	316SS nameplate permanently attached to housing. Stamped with customer specified tagging information.
VV	Fungicidal varnish. Covers exterior except working parts.

*Manufacturer limits on Viton GLT are -40 to 400°F.

1540	C	-	2A	-	C	-		-	PS	-	

1540 C - G2A - C - J0 - PS - MC

Example Model No.

Test Certificates

	Certificates	D1	D2	C1	C3	C4	C7	B7
1540 Pneumatic Level Switch	Certificate of Origin	◆						
	Manufacturer's Certificate		◆					
	Calibration			◆				◆
	Inspection Report				◆			◆
	Compliance / Conformance					◆		◆
	QA Test Report						◆	

Replacement Parts

Description	Part Number
20' Remote Cable with two cable crimps**	3130 - 040
Float	3100 - 152
Float & Arm Assembly	9227 - 012
Manual Check Accessory (MC)**	9227 - 024
Manual Check Accessory with remote 20' cable (MD)**	9227 - 025

**Unit must have originally been supplied with MC or MD option.

Limited Warranty

SOR agrees to repair or replace any switch found to be defective in material or workmanship within five years from date of shipment. The limited warranty is valid only if the switch was installed in accordance with published factory installation instructions, operated within the design limitations stated on the nameplate, and returned to the factory for inspection, freight prepaid, within the warranty period. Contact the factory for return authorization. No claim for labor or consequential damages will be allowed.

Form 500 (07.26) ©SOR Inc.

1550 is a vertically mounted, float-operated level switch suitable for plant and OEM applications where open or closed contacts are required to signal presence or absence of liquid at a discrete level. The float stem moves a magnet that actuates (deactuates) a hermetically sealed reed switch.

Dimensions

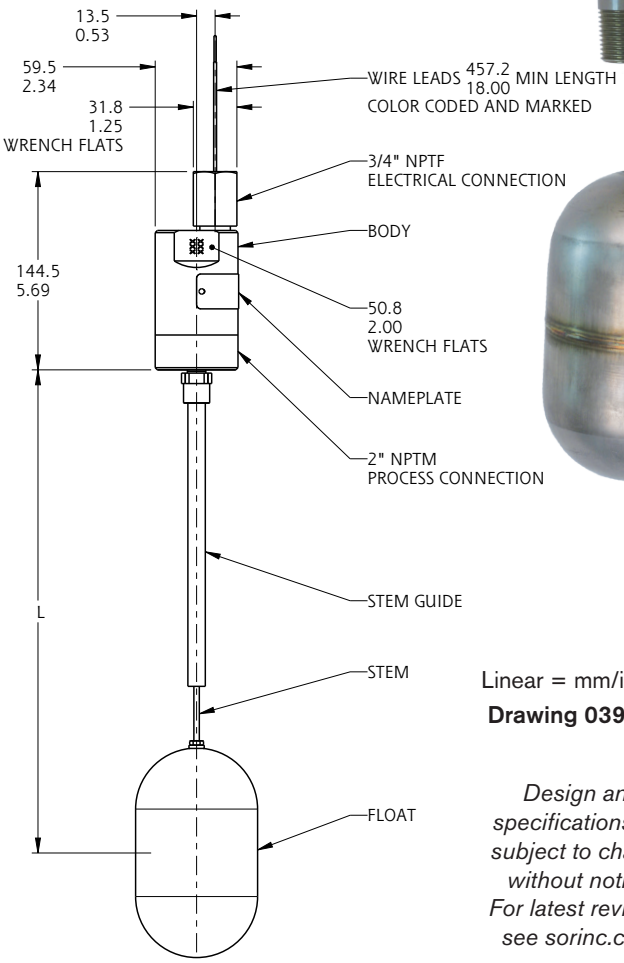

Linear = mm/inches

Drawing 0390789

Design and specifications are subject to change without notice. For latest revision, see sorinc.com.

Product Specifications

Mounting	
Orientation	Vertical mount only
Body Material	316 Stainless Steel
Connection Size	1-1/2" through 6"
Connection Type	NPT(M) or Flanged
Maximum Process Pressure	up to 473 psi (32.6 bar) @ 400°F (204°C)
Process Temperature Range	-40 to 400°F (-40 to 204°C)
Electrical	
Switch Type	Hermetically sealed reed switch with 18" 20 AWG wire leads
Housing	Class I, Groups A, B, C & D; Divisions 1 & 2 with CS option
Relay Housing	Class I, Groups C & D; Divisions 1 & 2 with CS option
Connection Size	1/2" NPT(F)
Minimum Specific Gravity (based on 14" insertion depth L in the figure at left)	0.60
Minimum Insertion Depth L	5" (13 cm)
Full Coupling	7" (17.8 cm)
Half Coupling	5.25" (13.3 cm)
Maximum Insertion Depth L	48" (122 cm)
Minimum Specific Gravity @ 48" (122 cm)	0.71
Design Code	ANSI B31.3
Weight	Approximately 5 lbs. (2.2 kg)
Agency Listing*	CSA Certified (US & Canada) and ANSI/ISA 12.27.01, ATEX and IEC or INMETRO approved (optional). See page 2. Certifications available upon request.

Safety Certified to IEC 61508 (SIL)

SOR products are certified to IEC 61508 for non-redundant use in SIL1 and SIL2 Safety Instrumented Systems for most models. For more details or values applicable to a specific product, see the Safety Integrity Level Quick Guide (Form 1528).

*Agency certifications may affect ratings. See Accessories for details.

Below is the SOR quick select model number tree that provides you with all the options to configure and order a product for your application. You must select a designator for each component.

1 Body Material

316 Stainless Steel	C

2 Process Connections

Threaded:	1 1/2" NPT(M)	F5A
	2" NPT(M)	F2A
Flanged: (Available with 316SS body only)	2 1/2" 150#	F7C
	300#	F7D
	600#	F7E
May affect process pressure rating.	3" 150#	F3C
	300#	F3D
	600#	F3E
	4" 150#	F4C
	300#	F4D
	6" 150#	F6C
	300#	F6D

3 Float Material

316SS (Standard)	473 psig (32.6 bar)	C
Monel	284 psig (19.6 bar)	M

4 Switch Mechanisms

Amperages based on resistive loads

General Purpose	SPST	0.9A @ 110 VAC Max 3A @ 28 VDC Max 3 Watt Minimum	W9
General Purpose	SPDT	0.9A @ 110 VAC Max 3A @ 28 VDC Max 3 Watt Minimum	W1
Low Power	SPST	25 Watts Max	L9
Low Power	SPDT	25 Watts Max	L1

5 Housing

Electronic Switch Housing: Class I, Groups A, B, C, D; Divisions 1 & 2 with CS option	ES

6 Optional Accessories

Insert accessory designator(s) as needed

CK*	ATEX and IECEx dual approved (not available with L9 or W9 switch mechanism). Ex d IIC Ga/Gb T4 (-40°C < Ta < +90°C), T5 (-40°C < Ta < +75°C) and Ex ia IIC T3 (-40°C < Ta < +125°C)
CL*	ATEX and IECEx approved. Ex ia IIC T3 (-40°C < Ta < +125 °C)
CR	3/4" NPT(F) conduit connection
CS*	CSA Certified, US and Canada. Class 1, Group A, B, C, D; Divisions 1 & 2. For relay option; Class 1, Group C & D, Divisions 1 & 2. Single seal ambient & process temperatures -40°C to +125°C
CV	Canadian Registration Number (CRN). Consult the factory for applicable pressure and additional information.
HB	Universal terminal box, 1/2" NPT(F), 316SS explosion proof. ATEX/IECEx certified Ex db IIC T4, T5, T6 Gb
HBME	Universal terminal box, M20 x 1.5(F), 316SS explosion proof. ATEX/IECEx certified Ex db IIC T4, T5, T6 Gb
HT	Explosion proof 316SS terminal box CSA Certified Class I, Groups A, B, C & D; Class II, Groups E, F & G; Class III, Division I (NEMA 4X)
MR	Mill Test Report
NC	NACE construction - MR0175 / ISO 15156. Available only with 316SS materials of construction
NM*	INMETRO approved. Ex ia IIC T3 (-40°C < Ta < +125°C)
RB**	24 VDC powered DPDT relay in explosion proof terminal box. Contact rating: 10 amps @ 115 VAC. Class I, Group C, D; Divisions 1 & 2.
RC**	120 VAC powered DPDT relay in explosion proof terminal box. Contact rating: 10 amps @ 115 VAC. Class I, Group C, D; Divisions 1 & 2
RR	Tag, 316SS. (Attached with 304SS wire to housing. Stamped with customer specified tagging information. 2 lines, 18 characters and spaces per line).
TS***	Taiwan Safety Mark
TT	316SS nameplate permanently attached to housing. Stamped with customer specified tagging information.

* CK, CL, CS or NM option is required on all flange mounted units.
** Not available with L9 or L1 switch options.
*** Requires use of CK or CL option.

1550	C	-		-		-		-	ES	-	

1550 C - F5A - C - W9 - ES - TT Example Model No.

Form 500 (07.26) ©SOR Inc.

Customer to specify insertion depth L for each switch. See drawing on page 1. Stem guides are not installed on units with insertion depth L less than 7" (177.8 mm). The 1550 Series level switch has a 3.5" (90 mm) diameter float. It will not fit through many process connections. Be sure there is access to attach the float from inside the vessel after instrument installation if necessary.

Test Certificates

	Certificate Designator	D1	D2	C1	C3	C4	C5	C6	C7	B5	B6	B7
1550 Level Switch	Certificate of Origin	◆										
	Manufacturer's Certificate		◆									
	Calibration			◆						◆	◆	◆
	Inspection Report				◆					◆	◆	◆
	Compliance / Conformance					◆						◆
	Dielectric Test						◆			◆		
	Insulation Resistance							◆		◆	◆	
	QA Test Report								◆			

Replacement Parts

Designator	Part Number
W9 - SPST Hermetically Sealed Switch Capsule	3130 - 106
W1 - SPDT Hermetically Sealed Switch Capsule	3130 - 245
W1 - SPDT Switch/Conduit Connection Assembly (CK option only)	3130 - 259
L9 - SPST Hermetically Sealed Switch Capsule	3130 - 107
L1 - SPDT Hermetically Sealed Switch Capsule	3130 - 244
L1 - SPDT Switch/Conduit Connection Assembly (CK option only)	3130 - 260
316SS Float. (Consult the factory for other materials.)	3101 - 122
Actuator Replacement Kit	3130 - 396

Limited Warranty

SOR agrees to repair or replace any switch found to be defective in material or workmanship within five years from date of shipment. The limited warranty is valid only if the switch was installed in accordance with published factory installation instructions, operated within the design limitations stated on the nameplate, and returned to the factory for inspection, freight prepaid, within the warranty period. Contact the factory for return authorization. No claim for labor or consequential damages will be allowed.

Manual Check

The original model 1500 was born from customer input and SOR continues the tradition by offering a manual check option for the 1500 series level switches. The optional manual check allows the user to verify switch integrity without removing it from the vessel or increasing or decreasing liquid levels. This is particularly useful for systems testing in safety applications, such as a manual override, where the switch is not called upon very often. It may also be used as a method to manually trigger a valve or activate the normal function of the switch.

Many customers are mandated by regulatory authorities to include this type of self-test function. Others just prefer the added functionality and peace of mind the manual check provides.

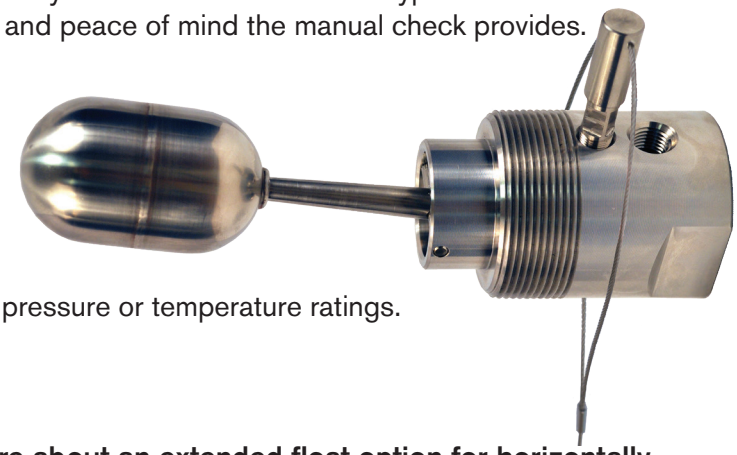

The manual check option is activated by simply pushing the self returning plunger. The manual check can also be activated by purchasing the MD option that provides a 20' remote cable.

Whatever your application, the manual check option provides added functionality to the 1500 series without compromising pressure or temperature ratings.

Extended Float

On occasion, we have customers inquire about an extended float option for horizontally mounted 1500 series. These float extensions are available in a variety of lengths and materials based on the conditions and specifications that the application and customer demand.

This option extends the pivot arm, placing the float further into the process vessel. It is particularly helpful in applications where the nozzle diameter is too small, or where process build-up can limit the full travel of the float. In either case, the unit does not have suitable clearance to fully actuate/deactuate; positioning the float past the obstruction allows it to travel the full range of motion.

There are times when extending the float can have adverse effects on the unit's ability to handle lower specific gravities. That's why SOR has several options available and is prepared to design a solution specifically for you if necessary.

* Adding a float extension will increase the unit's minimum specific gravity. Please consult factory to determine if a float extension is possible (Extension Length, SG, Pressure & Temperature required).

** Extended float option only available for the 1510 & 1530.

Form 500 (07.26) ©SOR Inc.

Chambers

Customers often ask SOR to use its machining and welding expertise to make small chambers that go with the 1500 series they purchase. Thanks to a major expansion of the SOR manufacturing facilities, we now offer competitively priced, ANSI quality chambers for use with the 1500 series products.

Flexible processes make it possible for us to offer chambers for both 1-1/2 and 2-inch body 1500 series products, as well as a wide range of available process connections. Whether you require the standard 1-inch NPT or even flanged connections, SOR can make it happen. Just give us your requirements and we're off and running.

With chambers from SOR, you can consolidate vendors and buy from a name you have trusted for many years.

Interface Detection

Liquid interface application can be commonly found across a wide range of industries.

The interface detection option changes the float's minimum specific gravity, allowing it to measure the lower liquid level while ignoring the upper (less dense) liquid. A specific gravity differential of approximately 0.25 between the upper & lower liquid is required for interface detection*.

* Please consult factory to determine if interface detection is possible (minimum and maximum interface specific gravities required).

** Interface detection option only available for the 1510 and 1530 with either 316SS(C) or Monel(M) float material.

All 1500 series mechanical level switches come with a 5-year warranty

SOR agrees to repair or replace any switch found to be defective in material or workmanship within five years from date of shipment. The limited warranty is valid only if the switch was installed in accordance with published factory installation instructions, operated within the design limitations stated on the nameplate and returned to the factory for inspection, freight prepaid, within the warranty period. Contact the factory for return authorization. No claim for labor or consequential damages will be allowed.

custom engineered to fit your application

MEASUREMENT AND CONTROL

Lenexa, KS USA | 913-888-2630 | Fax 913-888-0767 | **SORInc.com**

REGIONAL OFFICES

China

SOR China | Beijing, China | china@SORInc.com

+86 10 6773-7806 & +86 10 6773-7807

Middle East

SOR Measurement & Control Instrumentation FZCO | Dubai, UAE

middleeast@SORInc.com | +971 4 278 9632 | Fax +1 913 312 3596

Registered Quality System to ISO 9001

Form 500 (07.26) ©SOR Inc.