Low Profile Air Gripper

ø8, ø12, ø16, ø20, ø25, ø32

RoHS

Low Profile

MHF2-12D

Height: Max. 66% reduction

Moment reduction when transferring workpieces p. 1

72.8 mm ➡ **25 mm**

(Comparison with our **MHZ2 Series** equivalent gripping force products)

3 types of strokes available for each size p. 1

Short stroke | Medium stroke | Long stroke

New **ø25 and ø32 have been added.** p. 3

- **High rigidity**
- **Gripping point distance: Max. 170 mm** (For ø32, at 0.4 MPa)

Max. stroke 128 mm

(ø32 long stroke, Opening/closing dimension: 20 to 148 mm)

Linear guide

Recirculating linear guide for bore sizes ø25 and ø32

MHF2 Series

SMC

CAT.ES20-166C

Height reduced to approx. 1/3

with equal or greater gripping force than the MHZ2 series product

72.8 mm ➡ **25 mm** (Comparison between the MHF2 (ø12) and the MHZ2 (ø20))

The double piston construction allows for thin design with strong gripping force.

Model	Bore size [mm]	Height [mm]	Gripping force [N]
MHF2-8D□	8	19	19
MHZ2-10D□	10	49	11
MHF2-12D□	12	25	48
MHZ2-20D□	20	72.8	42
MHF2-16D□	16	33	90
MHZ2-25D□	25	87.7	65
MHF2-20D□	20	41	141
MHZ2-32D□	32	97	158
MHF2-25D□	25	45.5	240
MHZ2-40D□	40	120	254
MHF2-32D□	32	57	400
MHZ2-40D□	40	120	254

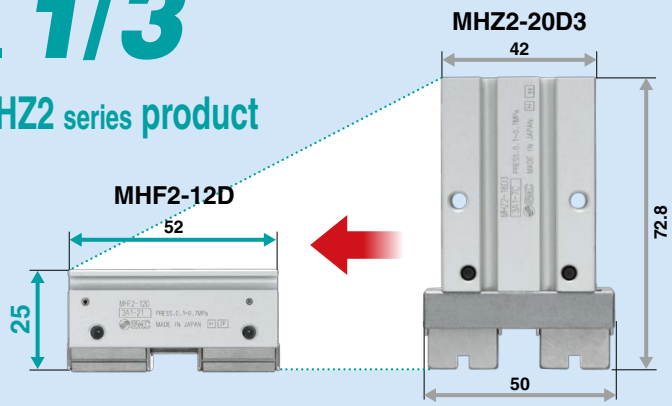

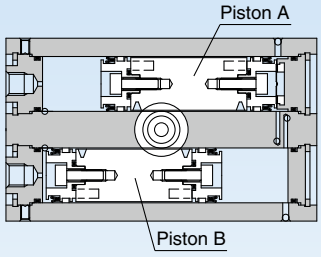

Max. allowable moment and load

Model	Vertical load Fvmax [N]	Pitch moment Mpmax [N·m]	Yaw moment Mymax [N·m]	Roll moment Mrmax [N·m]
MHF2-8D□	58	0.26	0.26	0.53
MHF2-12D□	98	0.68	0.68	1.4
MHF2-16D□	176	1.4	1.4	2.8
MHF2-20D□	294	2	2	4
MHF2-25D□	600	10	10	16
MHF2-32D□	900	20	20	32

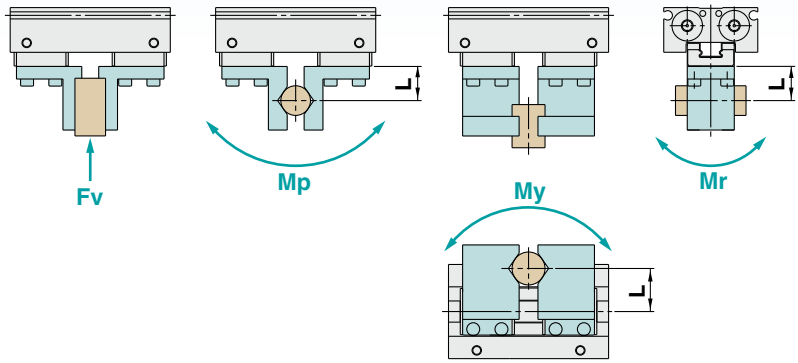

- Space-saving low-profile design
- Reduced moment generation
- Improved accuracy with smooth operation

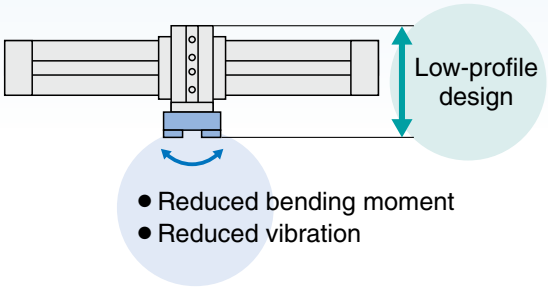

Stroke selection is available.

3 standard stroke lengths are available for each bore size. The stroke can be selected according to the workpiece.

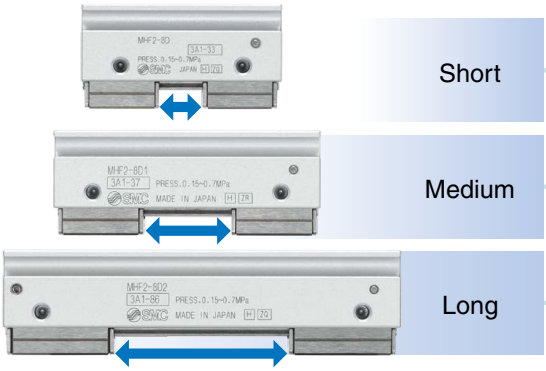

	ø8	ø12	ø16	ø20	ø25	ø32
Short	8 mm	12 mm	16 mm	20 mm	25 mm	32 mm
Medium	16 mm	24 mm	32 mm	40 mm	50 mm	64 mm
Long	32 mm	48 mm	64 mm	80 mm	100 mm	128 mm

SMC

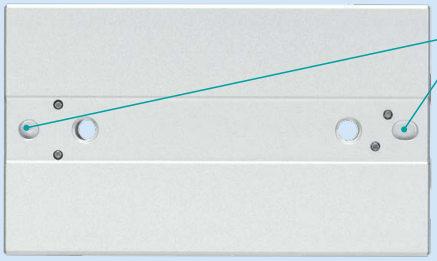

Improved mounting repeatability

With positioning pin holes

Auto switches can be mounted on both sides.

2 rows of switch mounting grooves on the same side for bore sizes ø25 and ø32 p. 3

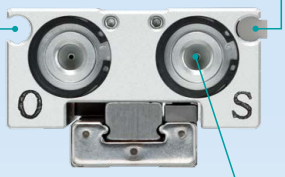

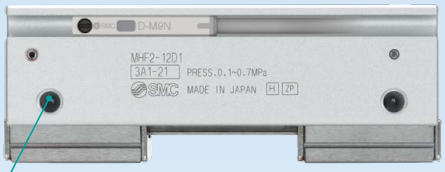

Piping is possible from 2 directions.

The piping port position can be specified using a part number.

Centralized wiring and piping are possible.

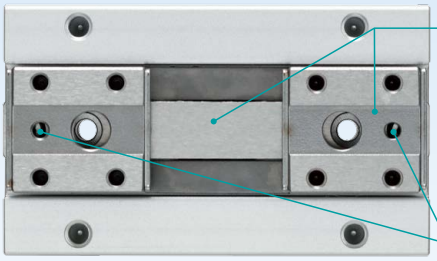

Linear guide

High precision and high rigidity

Recirculating linear guide for bore sizes ø25 and ø32 p. 3

Easy positioning for mounting attachments

With positioning pin holes

Mounting is possible from 4 directions.

As no brackets are required, the mounting height can be minimized.

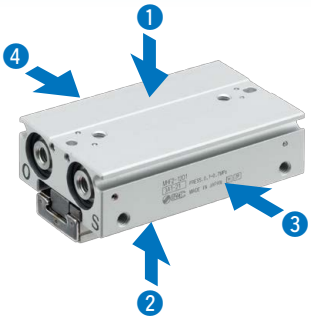

Mountable directions

<ø8 to ø20>

Axial piping : ❶❷❸❹

Side piping : ❶❷❹

<ø25, ø32>

Axial piping, side piping: ❶❷❸❹

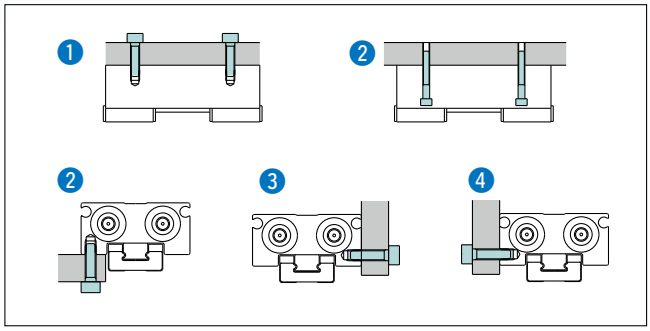

Actuator Position Sensor Compatible Type (ø8 to ø20)

Application Example For the measurement of workpieces

Made to Order -X7050 p. 37, 38

- The stroke position is output with an analog signal.
- Repeatability: 0.1 mm
- Direct mounting is possible.

c UL us LISTED *1 IO-Link *1 IP67 *1

*1 Actuator position sensor only

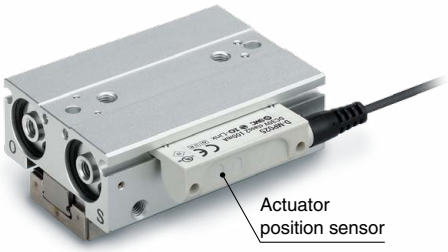

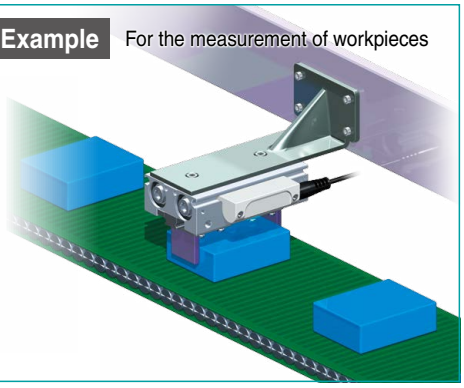

Bore sizes ø25 and ø32 have been added.

Gripping point distance Highly rigid linear guide with endless track allows for long gripping point distances.

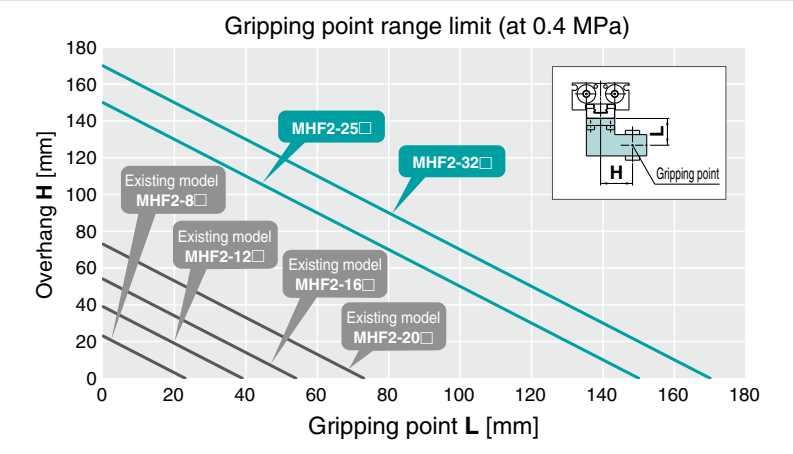

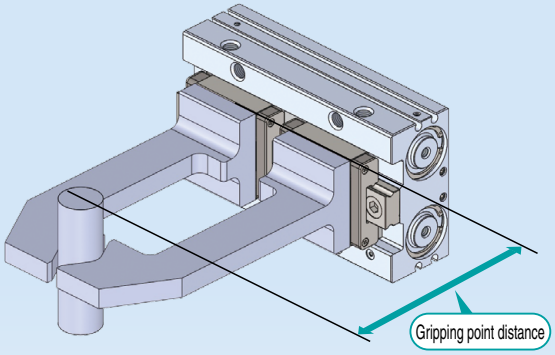

Uses a recirculating linear guide

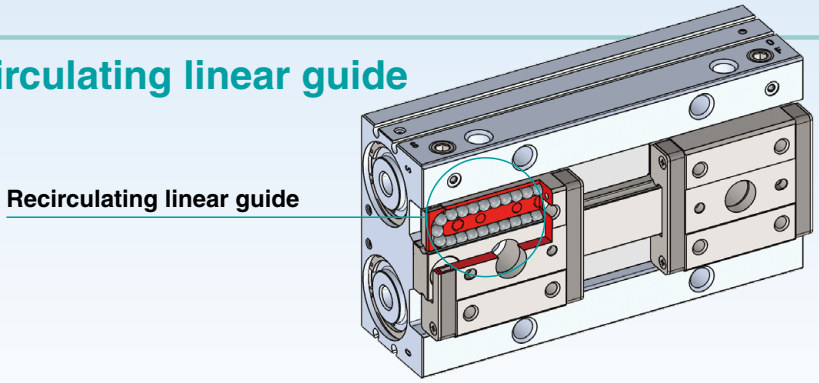

Solid state auto switches (D-A9□) are mountable.

2 rows of auto switch mounting grooves on both sides (1 row for bore sizes ø8 to ø20)

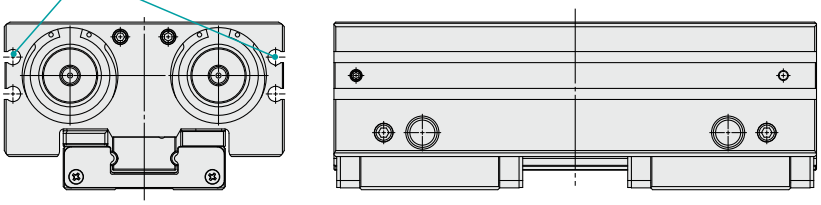

Application Example For the transfer of workpieces of various sizes

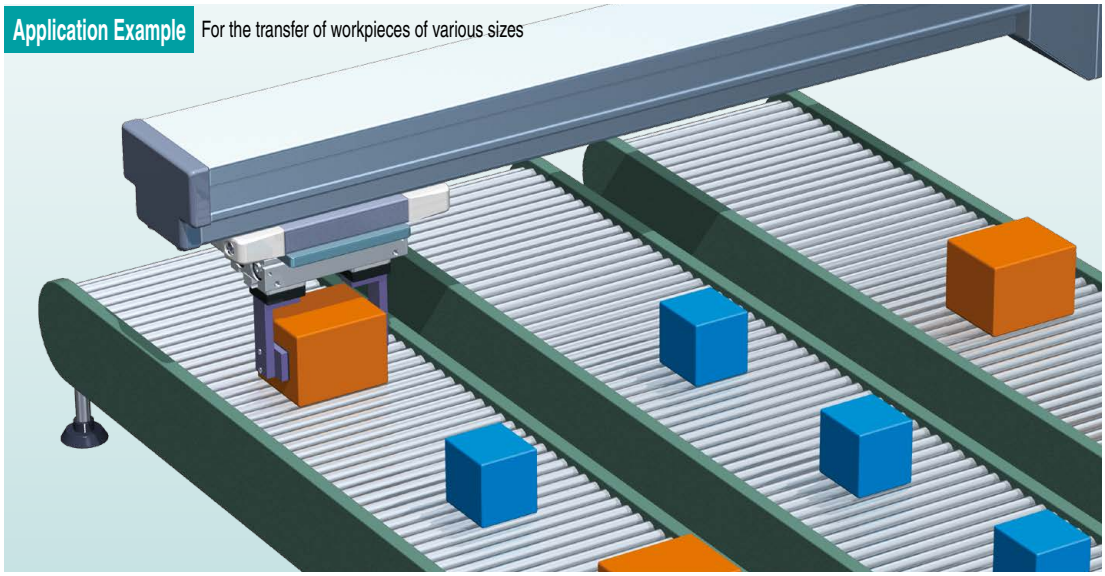

CONTENTS

Low Profile Air Gripper *MHF2 Series*

Model Selection ..... p. 5

How to Order ..... p. 9

Specifications ..... p. 10

Replacement Parts ..... p. 11

Dimensions ..... p. 14

Body Option: Side Piping Type ..... p. 26

Auto Switch Installation Examples and Mounting Positions ..... p. 27

Made to Order ..... p. 30

Specific Product Precautions ..... p. 39

Safety Instructions ..... Back cover

MHF2 Series
Model Selection

Model Selection

Selection Procedure

Step 1 Check the effective gripping force. → **Step 2** Check the gripping point. → **Step 3** Check the external force on fingers.

Step 1 Check the gripping force.

Check the conditions. → Calculate the required gripping force. → Select the model from gripping force graph.

Example

Workpiece mass: 0.15 kg

Gripping method: External gripping

Guidelines for the selection of the gripper with respect to workpiece mass

- Although conditions differ according to the workpiece shape and the coefficient of friction between the attachments and the workpiece, select a model that can provide a gripping force of at least 10 to 20 times*1 greater than the workpiece weight.
  *1 For further details, refer to the model selection illustration.
- Further allowance should be provided when great acceleration or impact is expected during workpiece transfer.

Calculation example

For setting the gripping force to be at least 20 times greater than the workpiece weight:
Required gripping force = 0.15 kg x 20 x 9.8 m/s² ≈ 29.4 N or more

Gripping point distance: 30 mm

Operating pressure: 0.4 MPa

MHF2-12D□

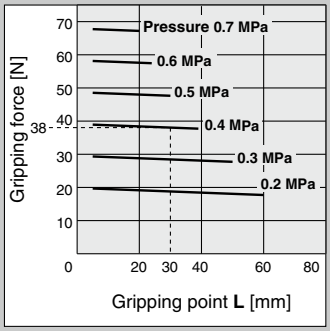

When the MHF2-12D is temporarily selected

- The gripping force is obtained from the intersection point of the gripping point L = 30 mm and a pressure of 0.4 MPa. Gripping force [N] = 38 N
- A gripping force of 38 N satisfies the required gripping force of 29.4 N. Therefore, the selection of MHF2-12D is appropriate.

Model Selection Illustration

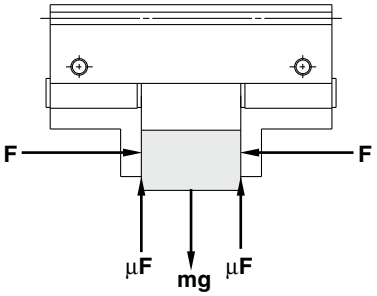

When gripping a workpiece as in the figure to the left, and with the following definitions,
F: Gripping force [N]
μ: Coefficient of friction between the attachments and the workpiece
m: Workpiece mass [kg]
g: Gravitational acceleration (= 9.8 m/s²)
mg: Workpiece weight [N]

the conditions under which the workpiece will not drop are

$$\underline{\underline{2}} \times \mu F > mg$$

Number of fingers

and therefore,

$$F > \frac{mg}{2 \times \mu}$$

With **"a"** representing the margin, **"F"** is determined by the following formula:

$$F = \frac{mg}{2 \times \mu} \times a$$

"Gripping force at least 10 to 20 times greater than the workpiece weight"

"At least 10 to 20 times greater than the workpiece weight" recommended by SMC is calculated with a margin of "a" = 4, which allows for impacts that occur during normal transportation, etc.

When μ = 0.2	When μ = 0.1
$F = \frac{mg}{2 \times 0.2} \times 4$ = 10 x mg	$F = \frac{mg}{2 \times 0.1} \times 4$ = 20 x mg
10 x Workpiece weight	20 x Workpiece weight

* • Even in cases where the coefficient of friction is greater than μ = 0.2, for reasons of safety, select a gripping force which is at least 10 to 20 times greater than the workpiece weight, as recommended by SMC.
• If high acceleration, or impact forces are encountered during motion, a further margin should be considered.

Step 1 Check the effective gripping force: MHF2 Series

- Indication of effective gripping force
  The gripping force shown in the graphs below represents the gripping force of one finger when all fingers and attachments are in contact with the workpiece.
  F = One finger thrust
- Both the external and internal gripping forces are the values shown in the graphs below.

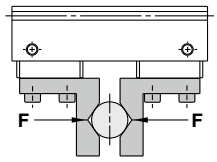

External gripping state

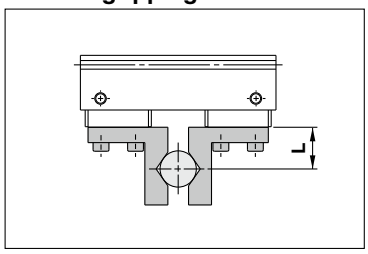

Internal gripping state

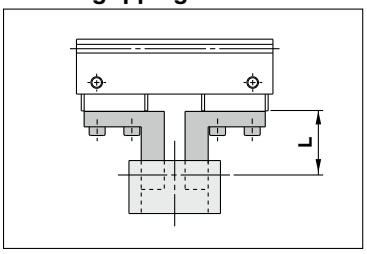

MHF2-8D□

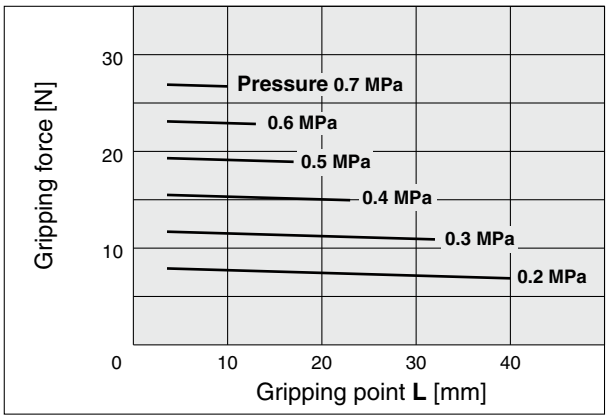

MHF2-12D□

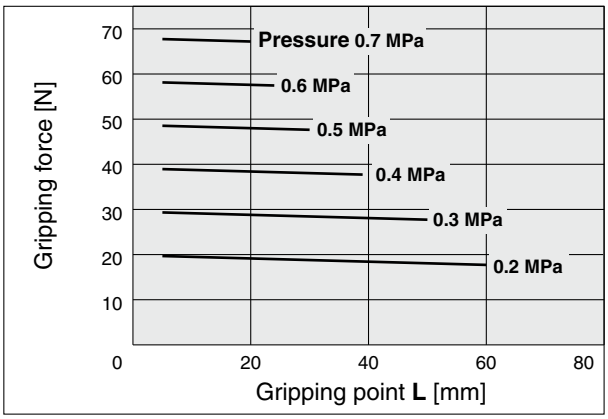

MHF2-16D□

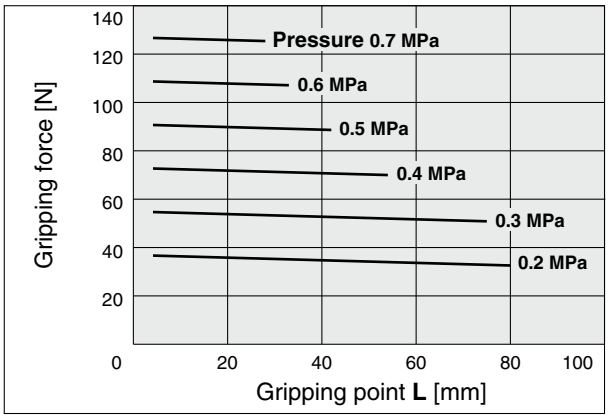

MHF2-20D□

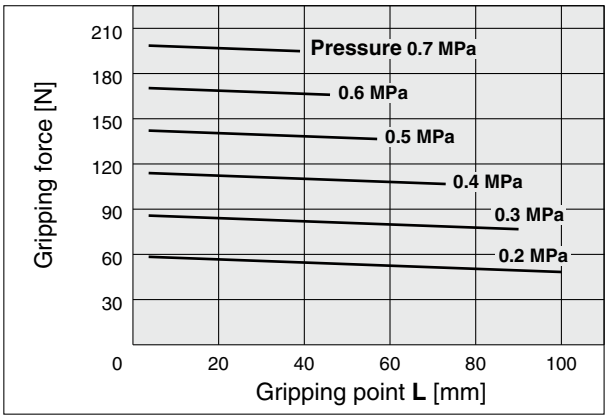

MHF2-25D□

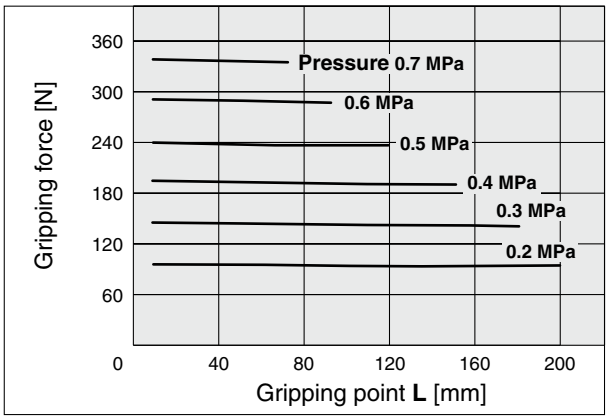

MHF2-32D□

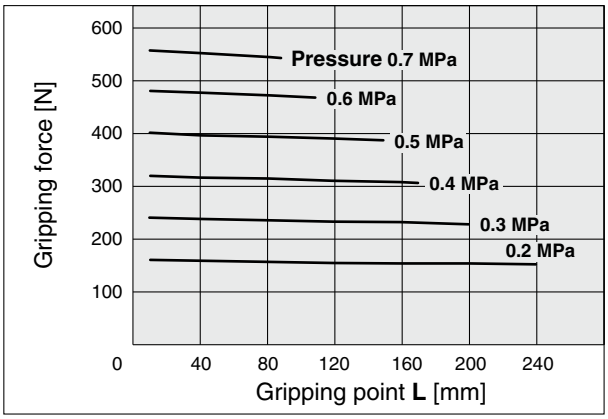

Model Selection

Step 2 Check the gripping point: MHF2 Series

External gripping state

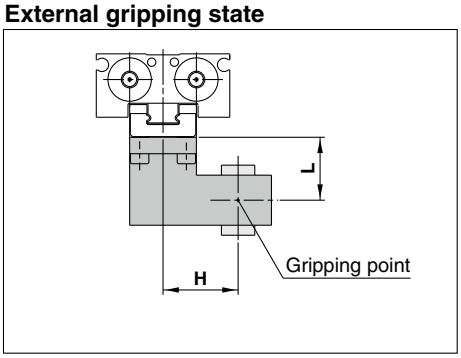

Internal gripping state

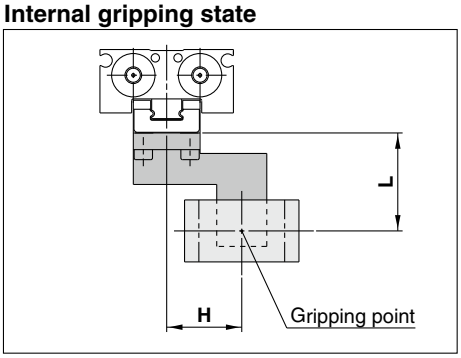

- The air gripper should be operated so that the workpiece gripping point "L" and the amount of overhang "H" stay within the range shown for each operating pressure given in the graphs below.
- If the workpiece gripping point goes beyond the range limits, this will have an adverse effect on the life of the air gripper.

MHF2-8D□

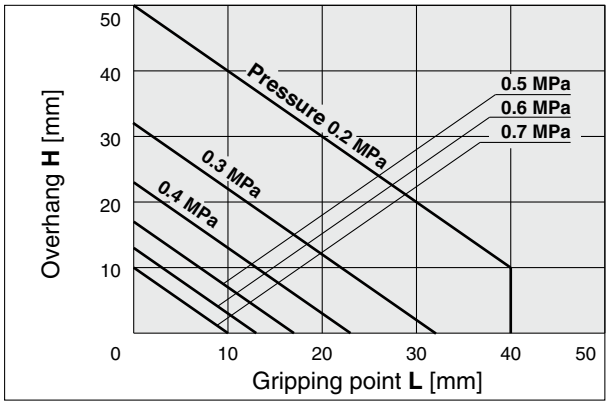

MHF2-12D□

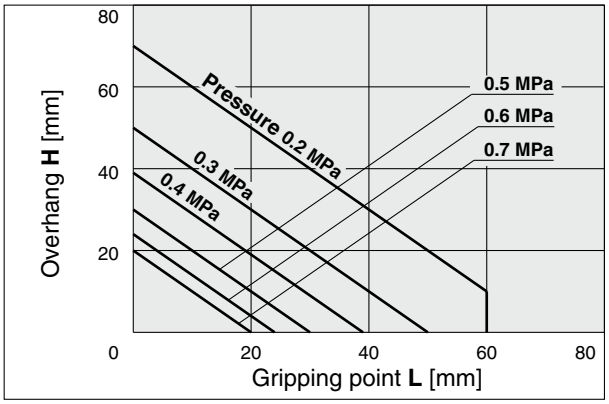

MHF2-16D□

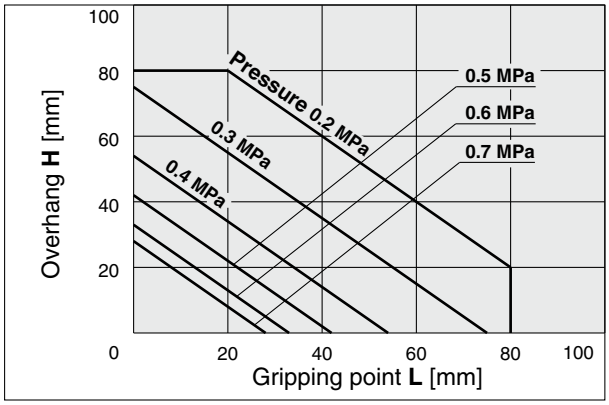

MHF2-20D□

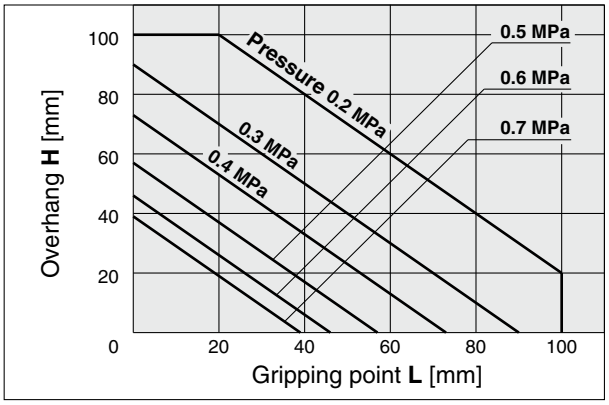

MHF2-25D□

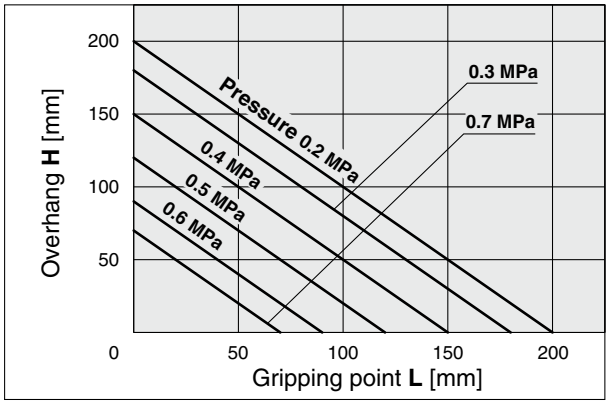

MHF2-32D□

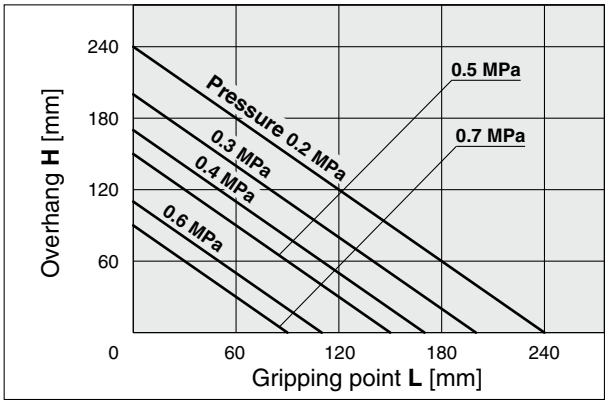

Step 3 Check the external force on fingers: MHF2 Series

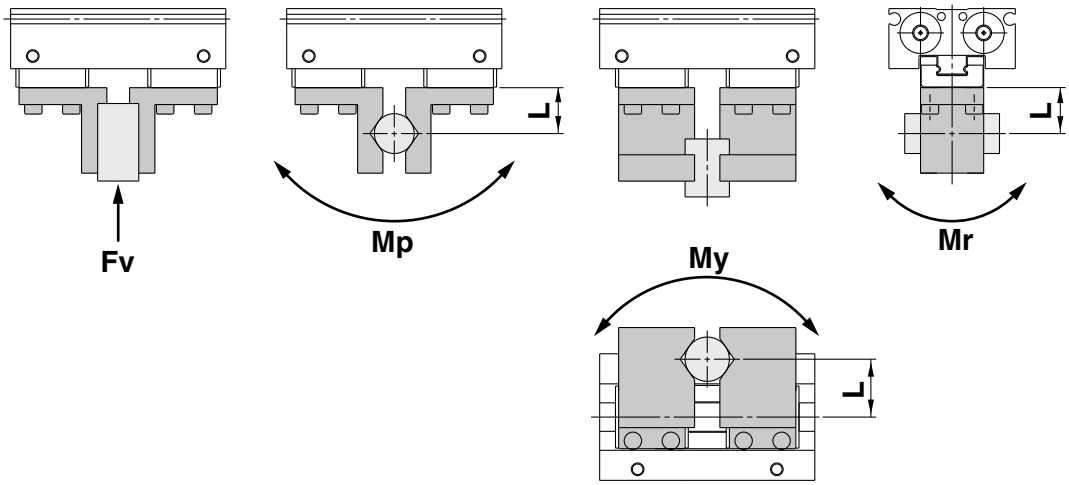

L: Distance to the point at which the load is applied [mm]

Model	Allowable vertical load **Fv** [N]	Max. allowable moment		
		Pitch moment **Mp** [N·m]	Yaw moment **My** [N·m]	Roll moment **Mr** [N·m]
MHF2-8D□	58	0.26	0.26	0.53
MHF2-12D□	98	0.68	0.68	1.4
MHF2-16D□	176	1.4	1.4	2.8
MHF2-20D□	294	2	2	4
MHF2-25D□	600	10	10	16
MHF2-32D□	900	20	20	32

∗ The load and moment values in the table indicate static values.

Calculation of allowable external force (when moment load is applied)	Calculation example
$\text{Allowable load F [N]} = \dfrac{\text{M (Max. allowable moment) [N·m]}}{\text{L} \times 10^{-3 *1}}$ (∗1 Constant for unit conversion)	When a load f = 10 N is operating, which applies pitch moment to point L = 30 mm from the end of the MHF2-12D finger. $\textbf{Allowable load F} = \dfrac{0.68}{30 \times 10^{-3}}$ **= 22.7 [N]** **Load f = 10 [N] < 22.7 [N]** Therefore, it can be used.

Low Profile Air Gripper

MHF2 Series

ø8, ø12, ø16, ø20, ø25, ø32

RoHS

How to Order

MHF 2 – 12 ☐ D ☐ ☐ – M9BW ☐ – ☐

Number of fingers

2	2

Bore size [mm]

8	8
12	12
16	16
20	20
25	25
32	32

Port thread type

Symbol	Type	Bore size
Nil	M thread	ø8 to ø25
	Rc	ø32
TN	NPT	
TF	G	

Action

D	Double acting

Stroke

Nil	Short stroke
1	Medium stroke
2	Long stroke

Body option

Nil	Axial piping type
R	Side piping type

Auto switch

Nil	Without auto switch (Built-in magnet)

Number of auto switches

Nil	2
S	1
n	n

Made to order
For details, refer to page 10.

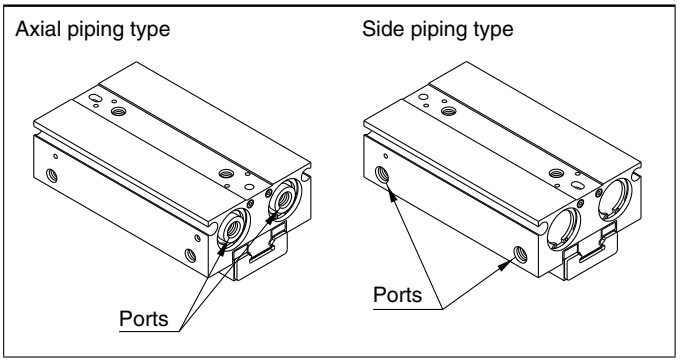

Applicable Auto Switches/Refer to the **Web Catalog** for further information on auto switches.

Type	Special function	Electrical entry	Indicator light	Wiring (Output)	Load voltage DC	Load voltage AC	Auto switch model Perpendicular	Auto switch model In-line	Lead wire length [m]*2 0.5 (Nil)	1 (M)	3 (L)	5 (Z)	Applicable bore size ø8	ø12	ø16	ø20	ø25	ø32	Pre-wired connector	Applicable load	
Solid state auto switch	——	Grommet	Yes	3-wire (NPN)	5 V,12 V	—	**M9NV**	**M9N**	●	●	●	○	●	●	●	●	●	●	○	IC circuit	Relay, PLC
				3-wire (PNP)			**M9PV**	**M9P**	●	●	●	○	●	●	●	●	●	●	○		
				2-wire	12 V		**M9BV**	**M9B**	●	●	●	○	●	●	●	●	●	●	○	—	
	Diagnostic indication (2-color indicator)			3-wire (NPN)	24 V	5 V,12 V	**M9NWV**	**M9NW**	●	●	●	○	●	●	●	●	●	●	○	IC circuit	
				3-wire (PNP)			**M9PWV**	**M9PW**	●	●	●	○	●	●	●	●	●	●	○		
				2-wire		12 V	**M9BWV**	**M9BW**	●	●	●	○	●	●	●	●	●	●	○	—	
	Water resistant (2-color indicator)			3-wire (NPN)		5 V,12 V	**M9NAV***1	**M9NA***1	○	○	●	○	●	●	●	●	●	●	○	IC circuit	
				3-wire (PNP)			**M9PAV***1	**M9PA***1	○	○	●	○	●	●	●	●	●	●	○		
				2-wire		12 V	**M9BAV***1	**M9BA***1	○	○	●	○	●	●	●	●	●	●	○	—	

*1 Water-resistant type auto switches can be mounted on the above models, but SMC cannot guarantee water resistance.

*2 Lead wire length symbols:
0.5 m..... Nil (Example) M9NW
1 m..... M (Example) M9NWM
3 m..... L (Example) M9NWL
5 m..... Z (Example) M9NWZ

* Solid state auto switches marked with a "○" are produced upon receipt of order.

* When using the 2-color indicator type, please make the setting so that the indicator is lit in red to ensure the detection at the proper position of the air gripper.

Symbol

Double acting:
Internal grip

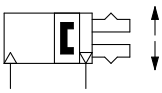

Double acting:
External grip

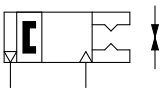

Made to Order

(For details, refer to pages 30 to 38.)

Symbol	Specifications
-X4	Heat resistant (–10 to 100°C)
-X5	Fluororubber seal
-X50	Without magnet
-X53	Ethylene propylene rubber seal (EPDM)
-X63	Fluorine grease
-X79	Grease for food processing machines: Fluorine grease
-X79A	Grease for food processing machines: Aluminum complex soap base grease
-X81A	Anti-corrosive treatment of finger
-X81B	Anti-corrosive treatment of finger and guide
-X83	With an adjustable opening/closing finger positioning
-X7050	Actuator position sensor compatible type

∗ There are no made-to-order options for bore sizes ø25 and ø32.

Moisture Control Tube
IDK Series

When operating an actuator with a small bore size and a short stroke at a high frequency, dew condensation (water droplets) may occur inside the piping depending on the conditions. Simply connecting the moisture control tube to the actuator will prevent dew condensation from occurring. For details, refer to **the IDK series in the Web Catalog**.

Specifications

Bore size [mm]		8	12	16	20	25	32
Fluid		Air					
Operating pressure		0.15 to 0.7 MPa	0.1 to 0.7 MPa				
Ambient and fluid temperatures		–10 to 60°C (No freezing)					
Repeatability∗1		±0.05 mm				±0.04 mm	
Max. operating frequency	**Short stroke**	120 c.p.m.				100 c.p.m.	60 c.p.m.
	Medium stroke	120 c.p.m.				100 c.p.m.	60 c.p.m.
	Long stroke	60 c.p.m.				60 c.p.m.	30 c.p.m.
Lubrication		Non-lube					
Action		Double acting					

∗1 This is the value when no offset load is applied to the finger.
When an offset load is applied to the finger, the max. value is ±0.15 mm due to the influence of backlash of the rack and pinion.

Model

Action	Model	Bore size [mm]	Gripping force∗1 Effective gripping force per finger [N]	Opening/ closing stroke (Both sides) [mm]	Weight∗2 [g]	Internal volume [cm³] Finger open side	Internal volume [cm³] Finger close side
Double acting	**MHF2-8D**	8	19	8	65	0.7	0.6
	MHF2-8D1			16	85	1.1	1.0
	MHF2-8D2			32	120	2.0	1.9
	MHF2-12D	12	48	12	155	1.9	1.6
	MHF2-12D1			24	190	3.3	3.0
	MHF2-12D2			48	275	6.1	5.8
	MHF2-16D	16	90	16	350	4.9	4.1
	MHF2-16D1			32	445	8.2	7.4
	MHF2-16D2			64	650	14.9	14.0
	MHF2-20D	20	141	20	645	8.7	7.3
	MHF2-20D1			40	850	15.1	13.7
	MHF2-20D2			80	1,225	28.0	26.6
	MHF2-25D	25	240	25	1,200	24.5	24.5
	MHF2-25D1			50	1,350	49.1	49.1
	MHF2-25D2			100	1,670	98.2	98.2
	MHF2-32D	32	400	32	2,240	51.5	51.5
	MHF2-32D1			64	2,500	102.9	102.9
	MHF2-32D2			128	3,200	205.9	205.9

∗1 At the pressure of 0.5 MPa, when gripping point L is 20 mm
∗2 Excluding the auto switch weight

Replacement Parts

MHF2-8D, MHF2-8D1

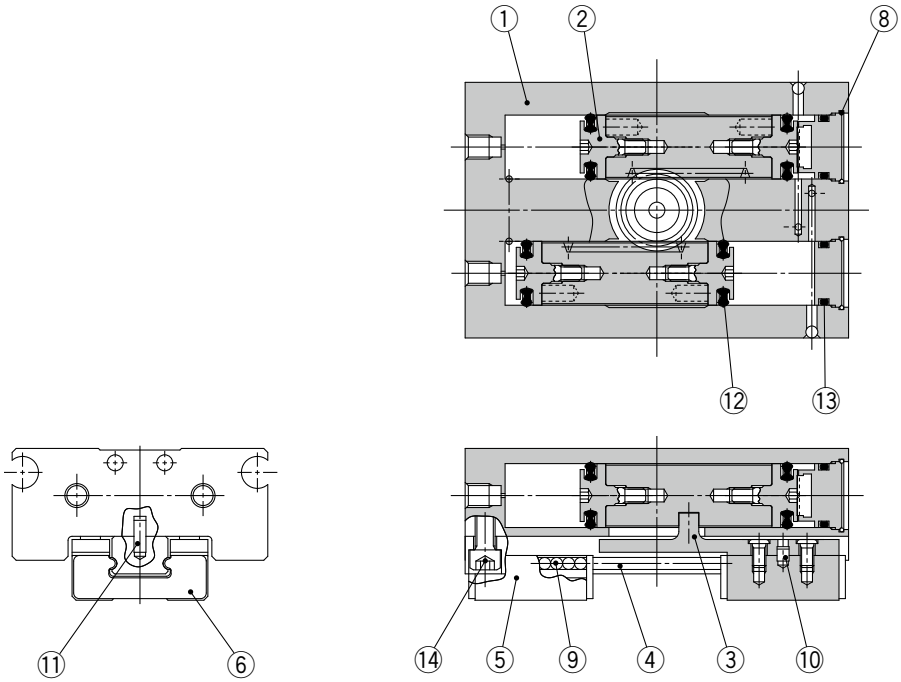

MHF2-8D2

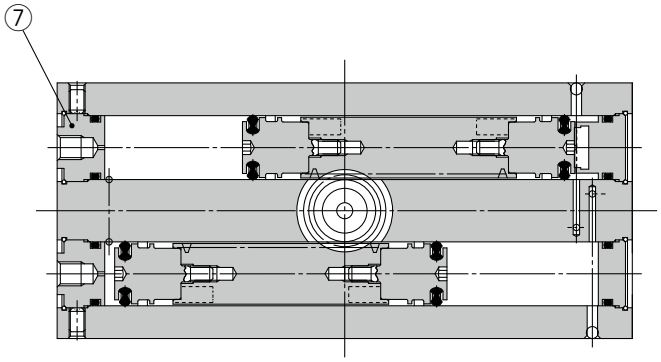

Component Parts

No.	Description
1	**Body**
2	**Piston assembly**
3	**Joint**
4	**Guide rail**
5	**Finger**
6	**Roller stopper**
7	**Cap A**

No.	Description
8	**Clip**
9	**Steel ball**
10	**Roller**
11	**Parallel pin**
12	**Piston seal**
13	**Gasket**
14	**Guide rail mounting thread**

Replacement Parts

Description	Kit no.			Contents
	MHF2-8D	**MHF2-8D1**	**MHF2-8D2**	
Seal kit	MHF8-PS	MHF8-PS	MHF8-PS-2	8, 12, 13
Finger assembly	MHF-A0802	MHF-A0802-1	MHF-A0802-2	3, 4, 5, 6, 9, 10, 11, 14

Replacement part/Grease pack part no.:
Guide unit: GR-S-010 (10 g)
Cylinder unit: GR-L-005 (5 g)

Bolts for Body Through-hole Mounting

Part no.	Number of pieces	
MHF-B08	MHF2-8D	2 pieces/unit
	MHF2-8D1	2 pieces/unit
	MHF2-8D2	4 pieces/unit

∗ The bolts for body through-hole mounting are attached to the product. They are also provided at an order of 1 piece or more with the above part numbers.

Replacement Parts

MHF2-12D□ to 20D□

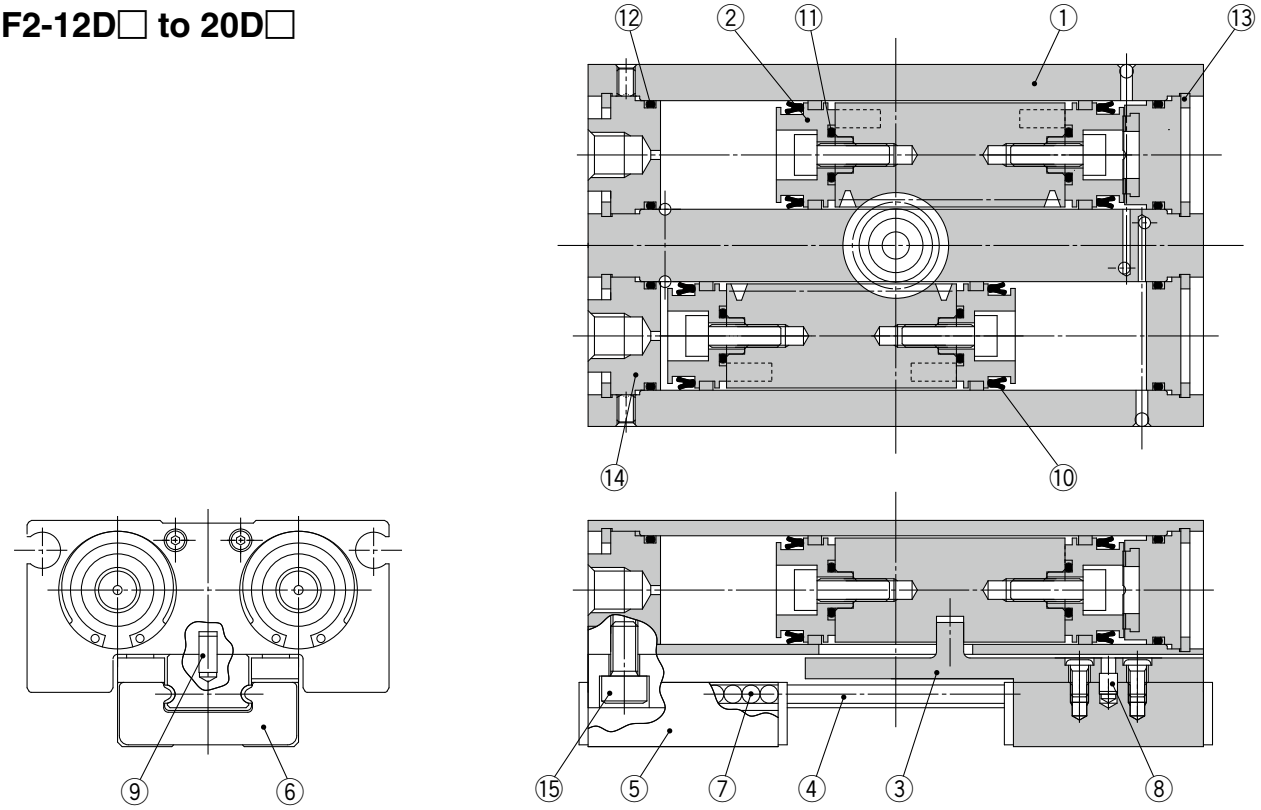

Component Parts

No.	Description
1	**Body**
2	**Piston assembly**
3	**Joint**
4	**Guide rail**
5	**Finger**
6	**Roller stopper**
7	**Steel ball**
8	**ø12: Roller**
	ø16 to ø20: Parallel pin

No.	Description
9	**Parallel pin**
10	**Piston seal**
11	**Gasket**
12	**Gasket**
13	**ø12: R shape retaining ring**
	ø16 to ø20: Type C retaining ring
14	**Cap A**
15	**Guide rail mounting thread**

Replacement Parts

Description	Kit no.			Contents
	MHF2-12D	**MHF2-12D1**	**MHF2-12D2**	
Seal kit	MHF12-PS	MHF12-PS	MHF12-PS	10, 11, 12
Finger assembly	MHF-A1202	MHF-A1202-1	MHF-A1202-2	3, 4, 5, 6, 7, 8, 9, 15

Description	Kit no.			Contents
	MHF2-16D	**MHF2-16D1**	**MHF2-16D2**	
Seal kit	MHF16-PS	MHF16-PS	MHF16-PS	10, 11, 12
Finger assembly	MHF-A1602	MHF-A1602-1	MHF-A1602-2	3, 4, 5, 6, 7, 8, 9, 15

Description	Kit no.			Contents
	MHF2-20D	**MHF2-20D1**	**MHF2-20D2**	
Seal kit	MHF20-PS	MHF20-PS	MHF20-PS	10, 11, 12
Finger assembly	MHF-A2002	MHF-A2002-1	MHF-A2002-2	3, 4, 5, 6, 7, 8, 9, 15

Bolts for Body Through-hole Mounting

Part no.	Number of pieces	
MHF-B12	MHF2-12D	2 pieces/unit
	MHF2-12D1	2 pieces/unit
	MHF2-12D2	4 pieces/unit

∗ The bolts for body through-hole mounting are attached to the product. They are also provided at an order of 1 piece or more with the above part numbers.

∗ When mounting MHF2-16D□ or MHF2-20D□ with the body through-holes, use hexagon socket head cap screws available on the market.

Grease Pack Part Nos.

MHF2-□□D, D1 (ø12, ø16, ø20)	**GR-S-010** (10 g) (Guide unit)
MHF2-□□D2 (ø12)	**GR-L-005** (5 g) (Cylinder unit)
MHF2-□□D2 (ø16, ø20)	**GR-S-010** (10 g) (Guide unit)
	GR-L-010 (10 g) (Cylinder unit)

Replacement Parts

MHF2-25□, 32□

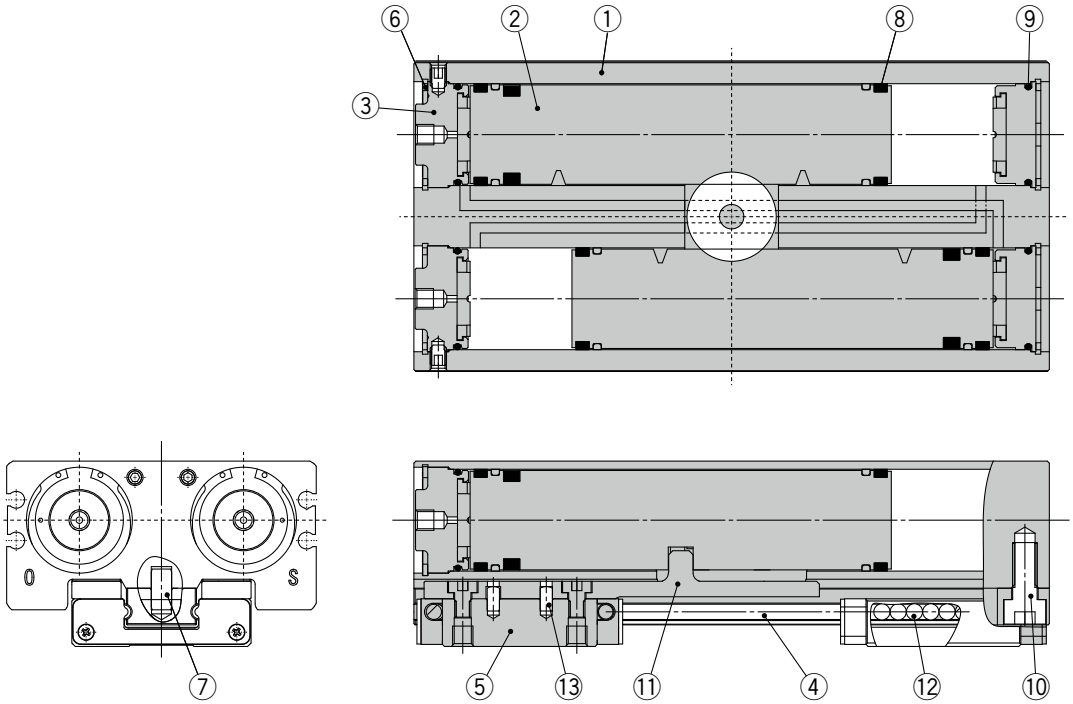

Component Parts

No.	Description
1	**Body**
2	**Piston assembly**
3	**Cap A**
4	**Guide rail**
5	**Finger**
6	**R shape retaining ring**
7	**Parallel pin**
8	**Piston seal**
9	**Gasket**
10	**Guide rail mounting bolt**
11	**Joint**
12	**Steel ball**
13	**Parallel pin**

Replacement Parts

Description	Kit no.			Contents
	MHF2-25D	**MHF2-25D1**	**MHF2-25D2**	
Finger assembly	MHF-A2502	MHF-A2502-1	MHF-A2502-2	4, 5, 7, 10, 11, 12, 13

Description	Kit no.			Contents
	MHF2-32D	**MHF2-32D1**	**MHF2-32D2**	
Finger assembly	MHF-A3202	MHF-A3202-1	MHF-A3202-2	4, 5, 7, 10, 11, 12, 13

Grease Pack Part Nos.

MHF2-□□D, D1, D2 (ø25, ø32)	**GR-S-010** (10 g) (Guide unit)

Dimensions: 8D

MHF2-8D

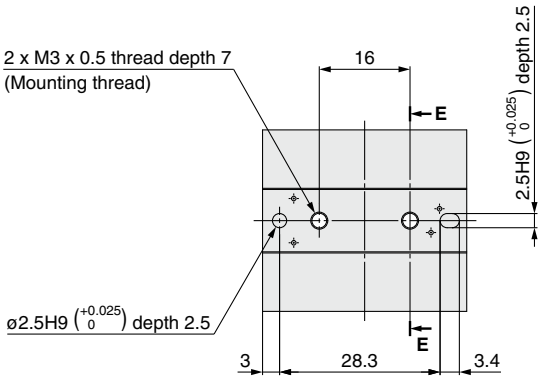

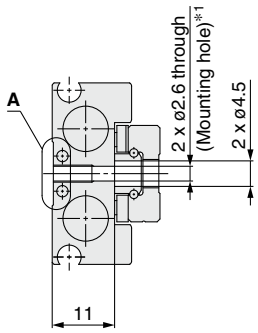

E-E

*1 Use the attached hexagon socket head cap screws for mounting holes.

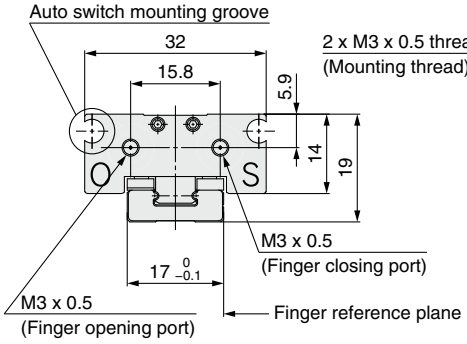

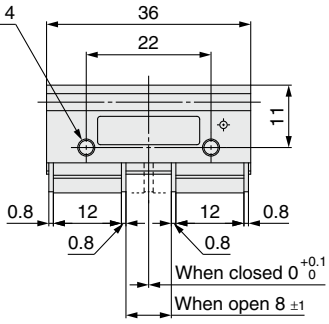

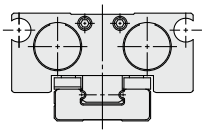

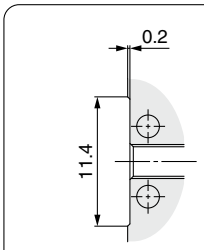

Section A details

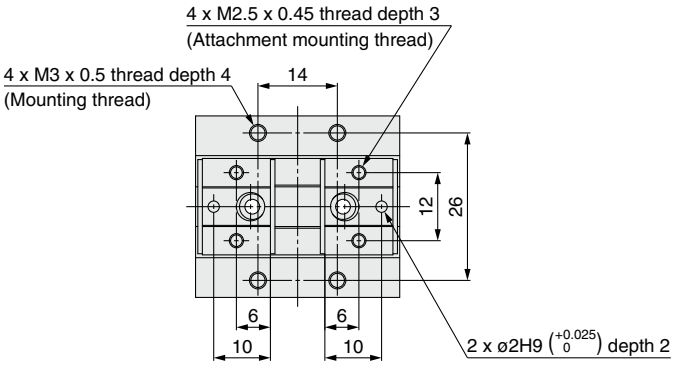

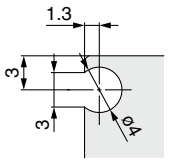

Dimensions of auto switch mounting groove

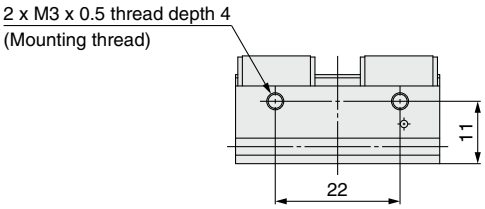

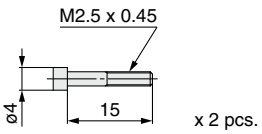

Accessory:
Hexagon socket head cap screw
(Special screw)

Dimensions: 8D1, 8D2

MHF2-8D1, 8D2

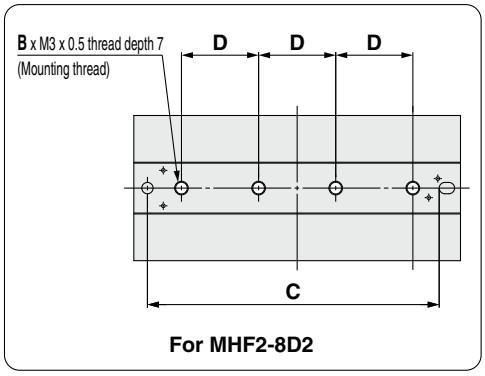

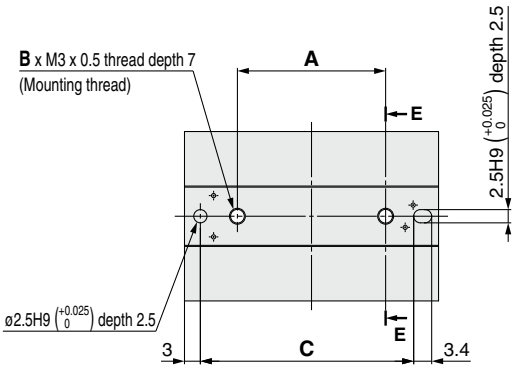

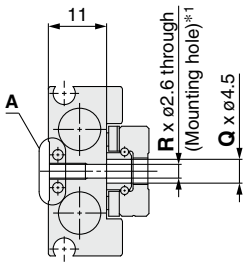

*1 Use the attached hexagon socket head cap screws for mounting holes.

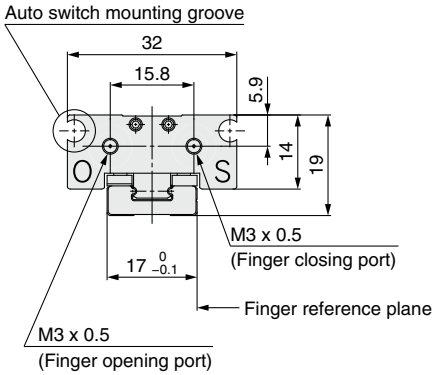

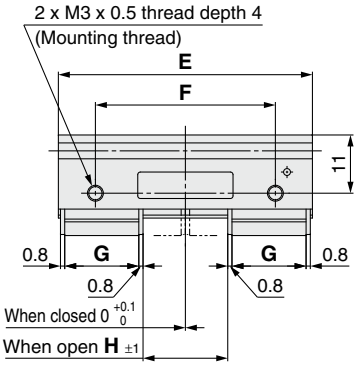

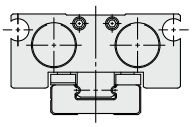

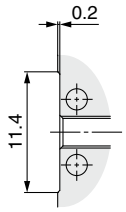

Section A details

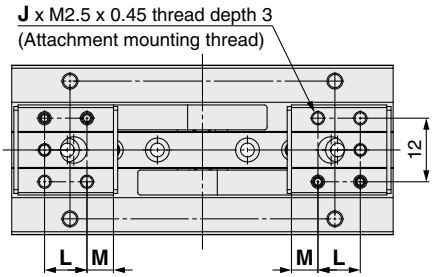

For MHF2-8D2

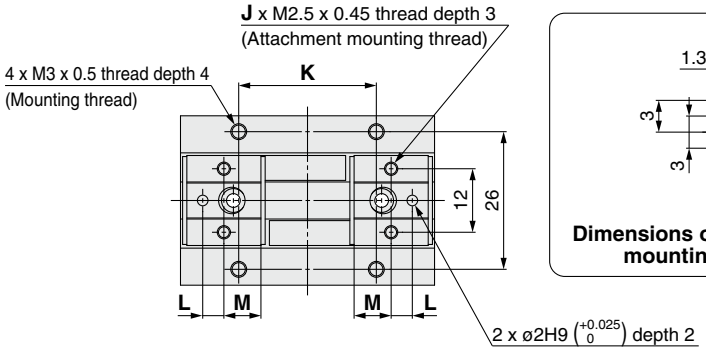

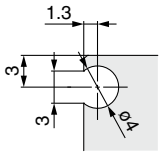

Dimensions of auto switch mounting groove

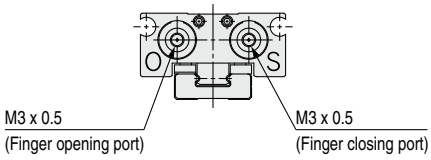

For MHF2-8D2

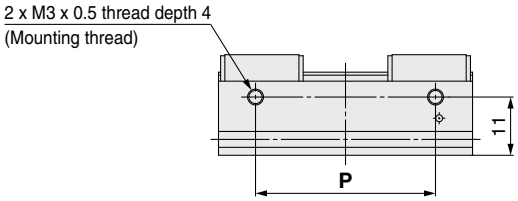

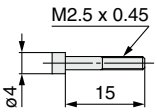

Accessory: Hexagon socket head cap screw (Special screw)
(8D1: 2 pcs. included, 8D2: 4 pcs. Included)

[mm]

Model	A	B	C	D	E	F	G	H	J	K	L	M	P	Q	R
MHF2-8D1	28	2	40.3	—	48	34	14	16	4	26	4	7	34	2	2
MHF2-8D2	—	4	64.3	17	72	58	18	32	8	50	8	5	58	4	4

Dimensions: 12D

MHF2-12D

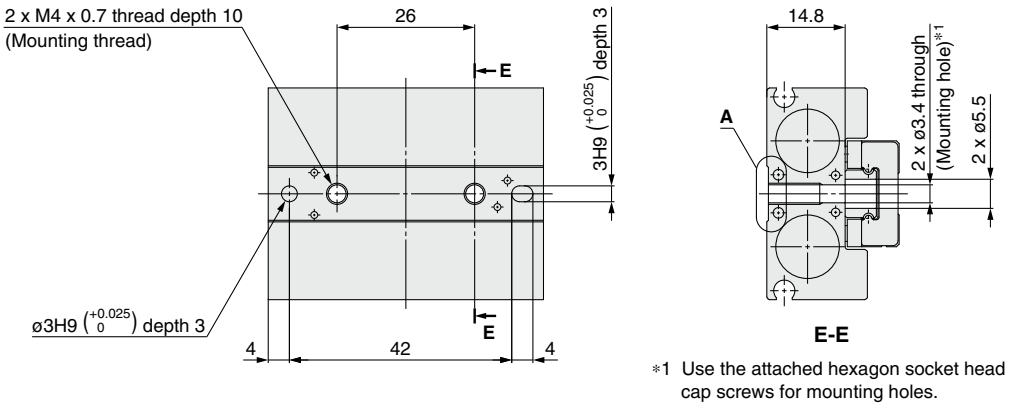

*1 Use the attached hexagon socket head cap screws for mounting holes.

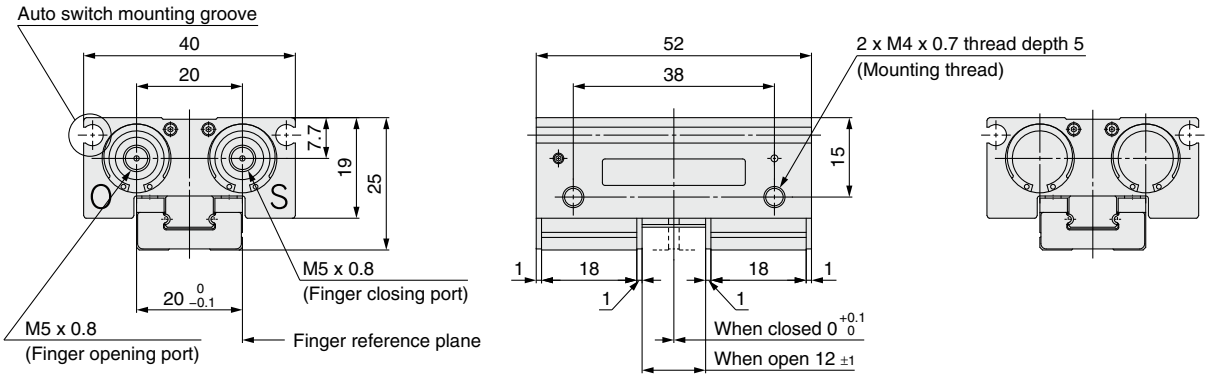

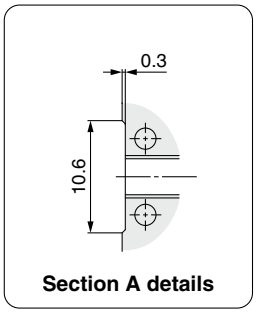

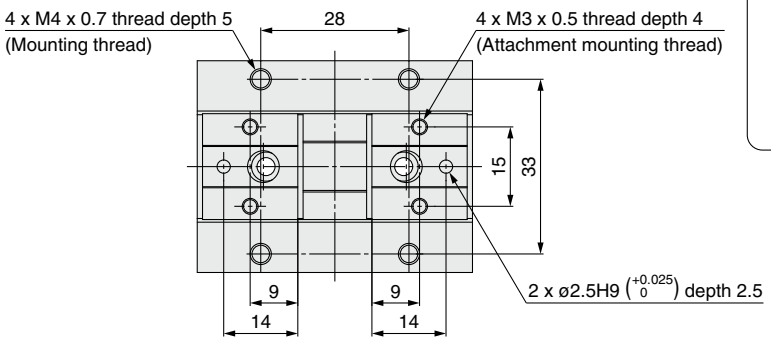

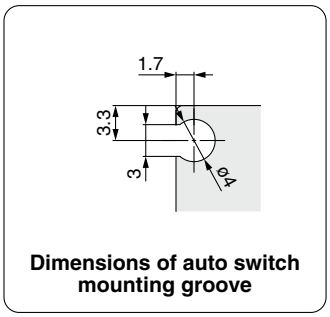

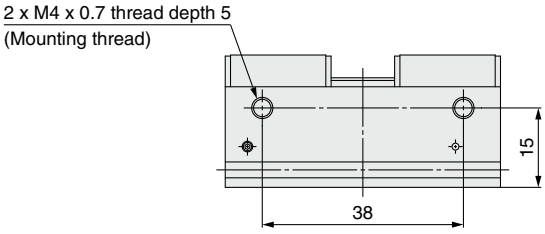

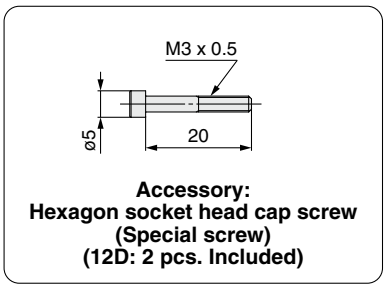

Dimensions: 12D1, 12D2

MHF2-12D1, 12D2

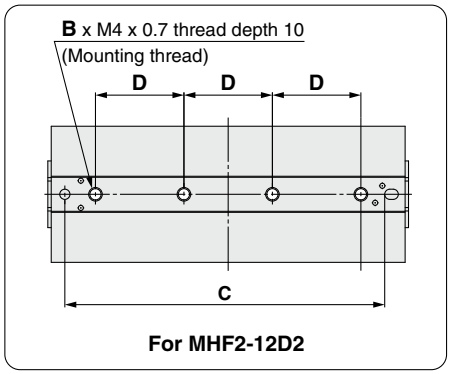

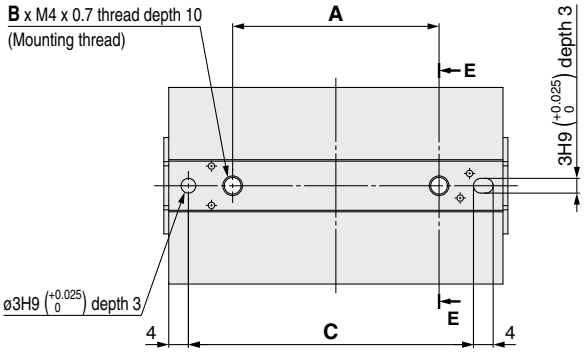

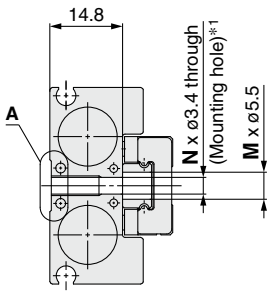

E-E

*1 Use the attached hexagon socket head cap screws for mounting holes.

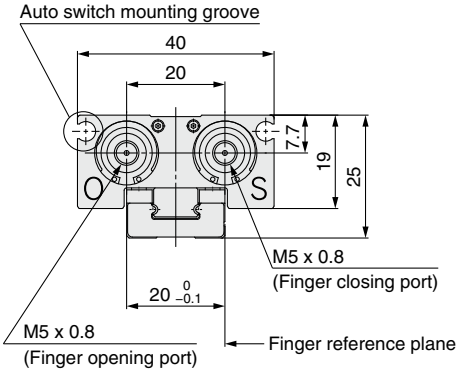

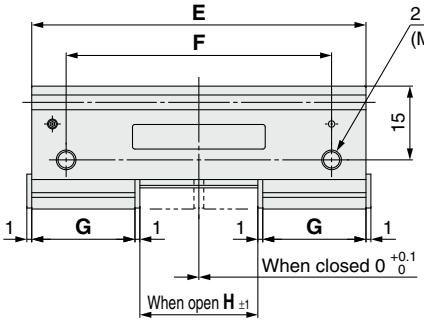

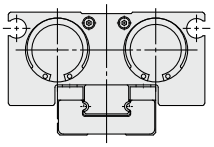

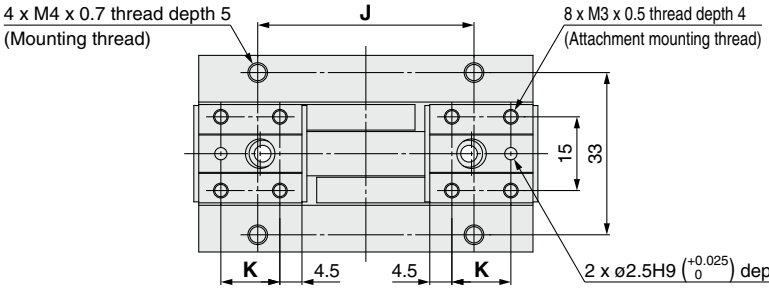

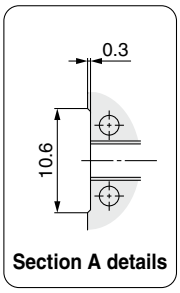

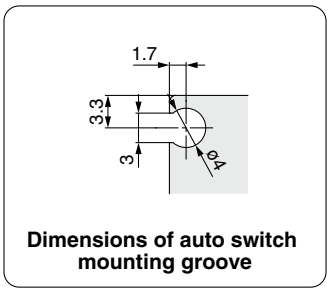

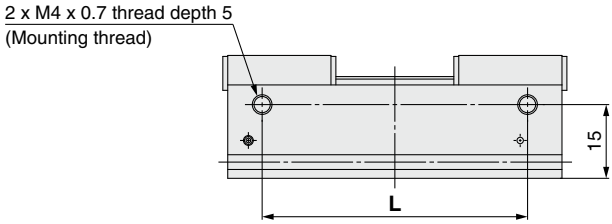

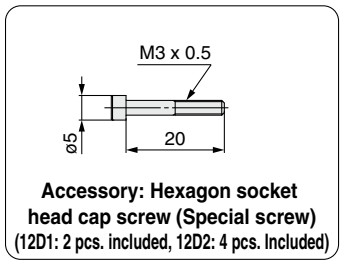

[mm]

Model	A	B	C	D	E	F	G	H	J	K	L	M	N
MHF2-12D1	42	2	58	—	68	54	21	24	44	12	54	2	2
MHF2-12D2	—	4	94	26	104	90	27	48	80	18	90	4	4

Dimensions: 16D

MHF2-16D

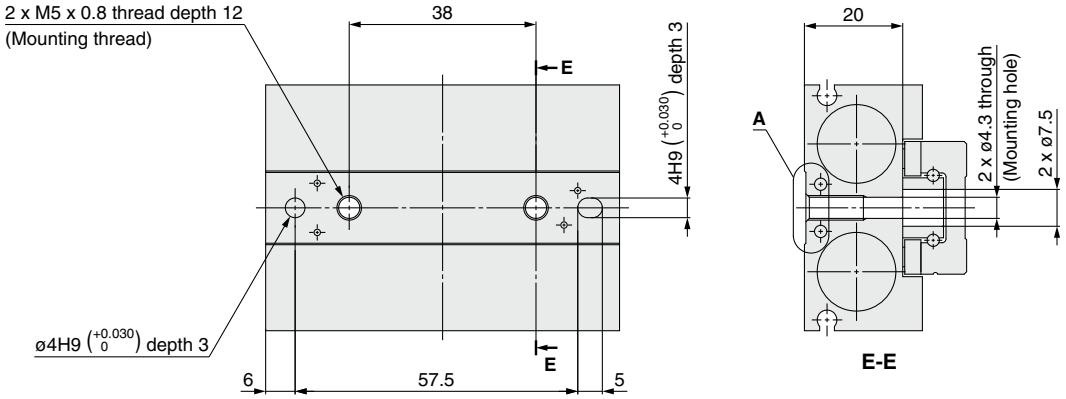

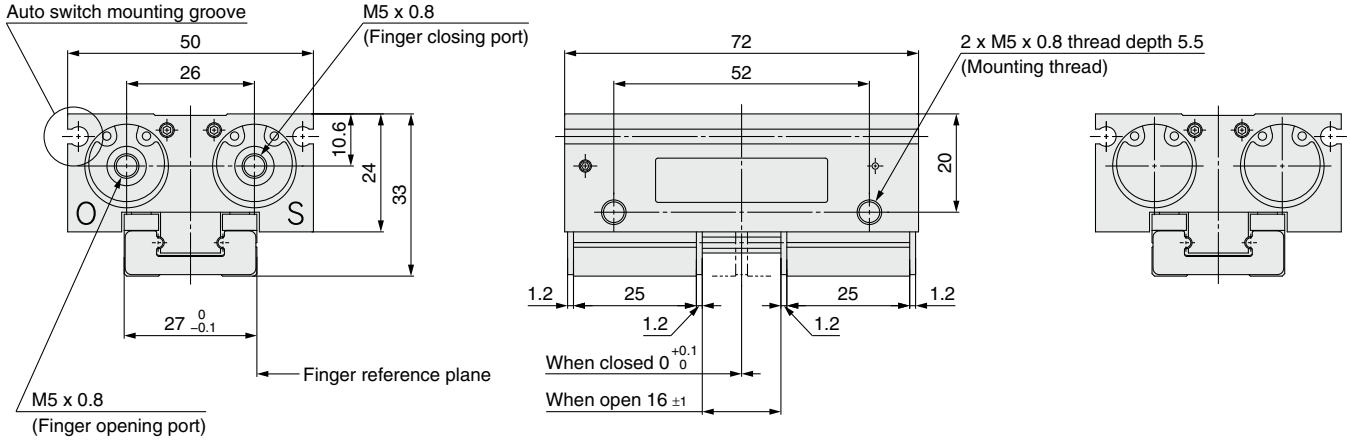

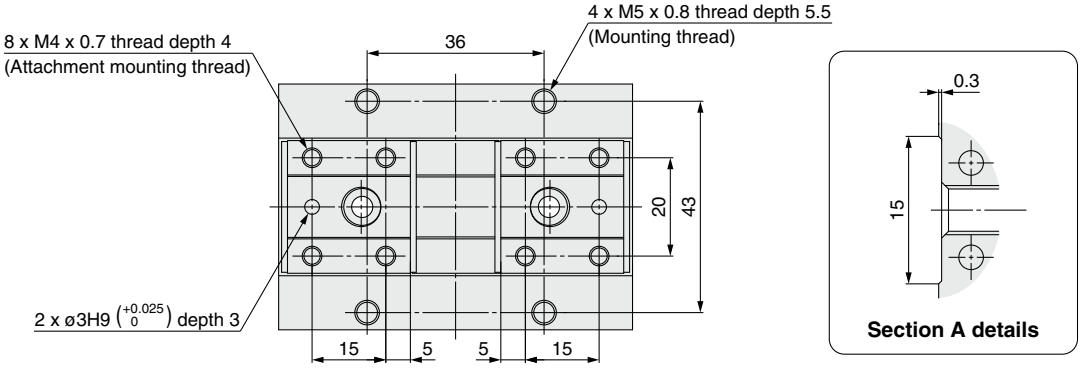

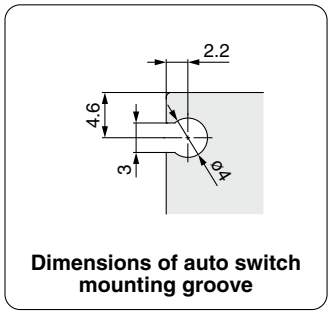

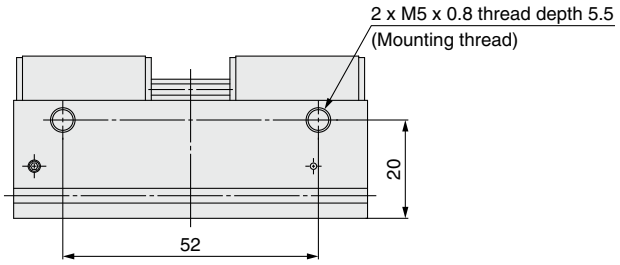

Dimensions: 16D1, 16D2

MHF2-16D1, 16D2

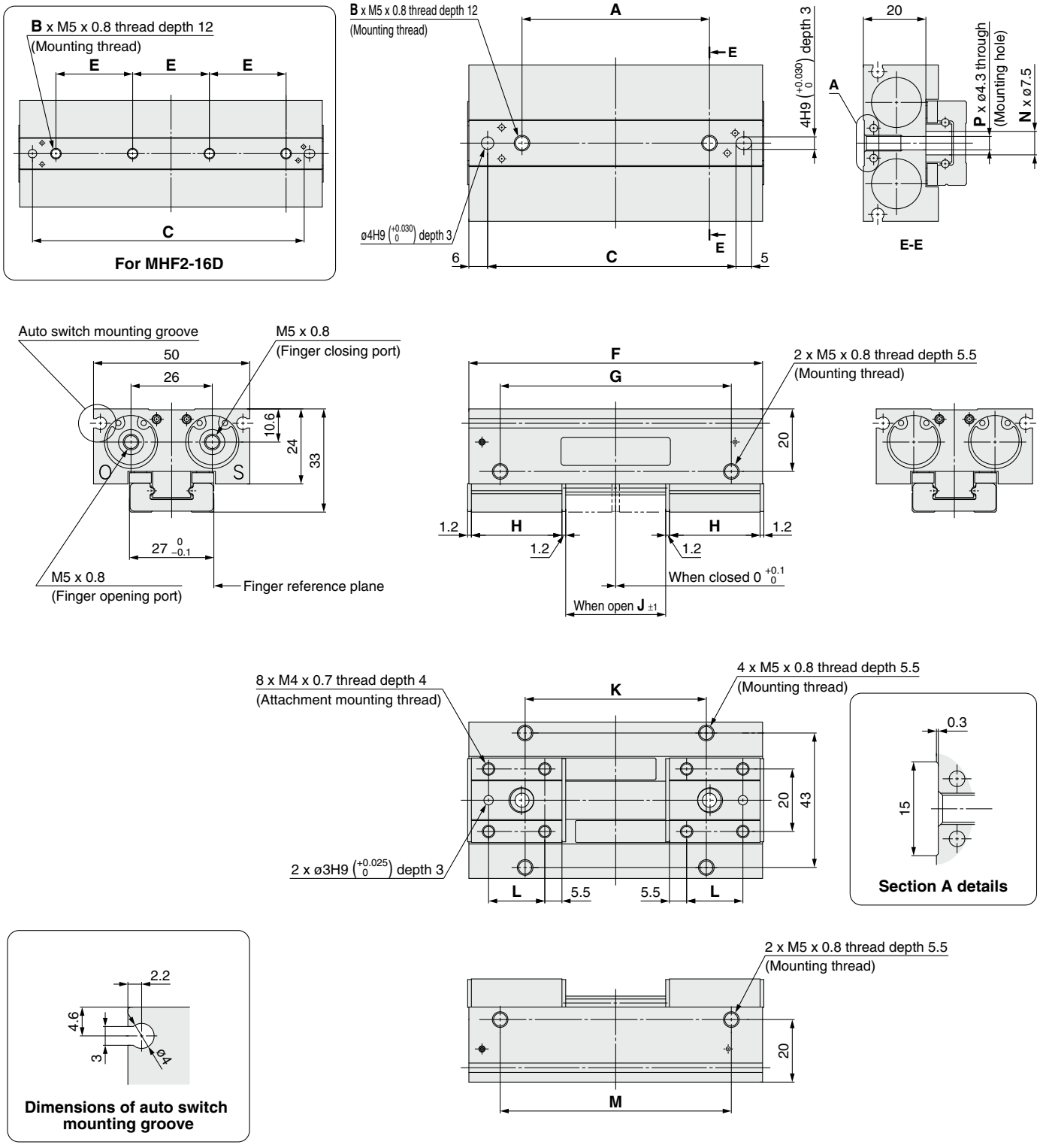

[mm]

Model	A	B	C	E	F	G	H	J	K	L	M	N	P
MHF2-16D1	60	2	79.5	—	94	74	29	32	58	18	74	2	2
MHF2-16D2	—	4	127.5	36	142	122	37	64	106	26	122	4	4

Dimensions: 20D

MHF2-20D

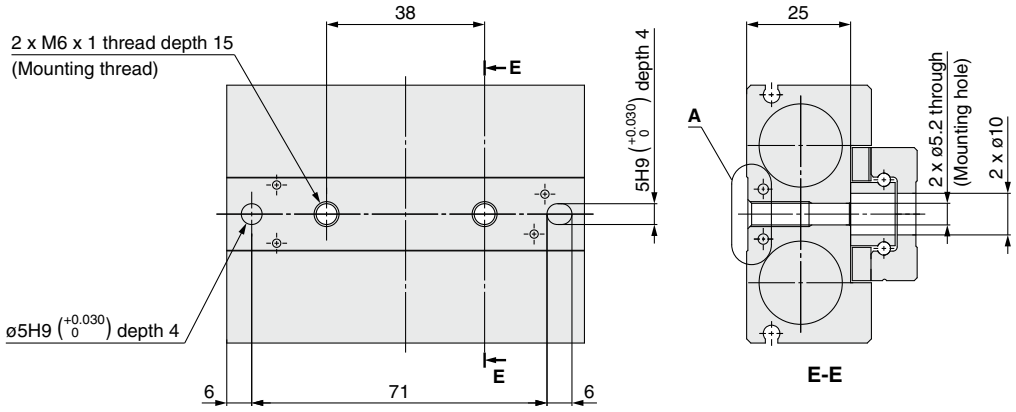

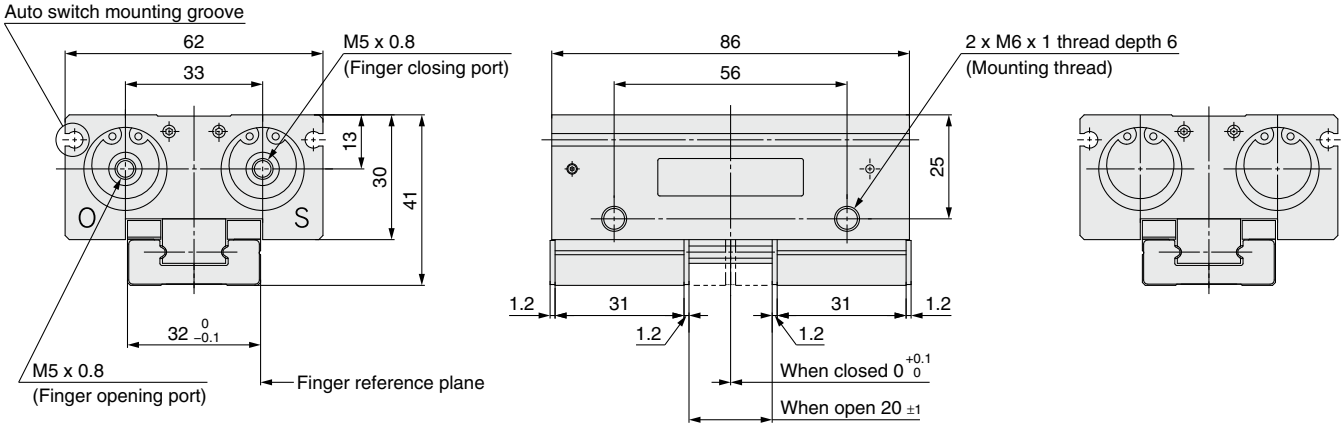

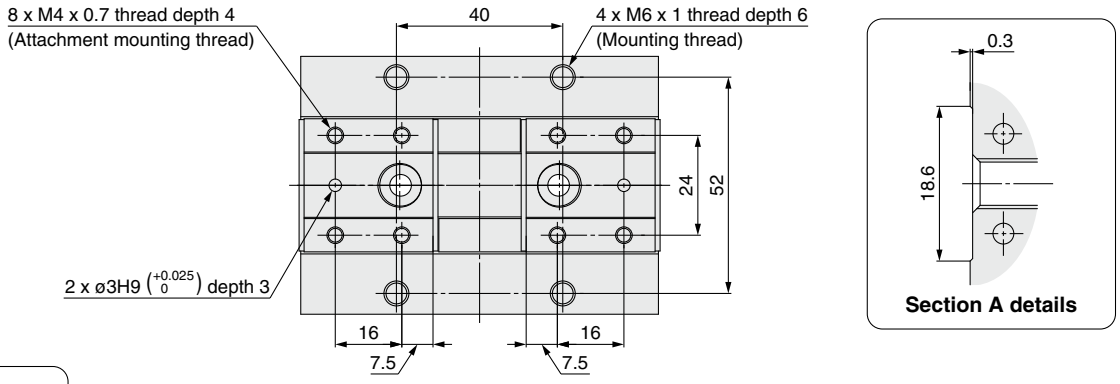

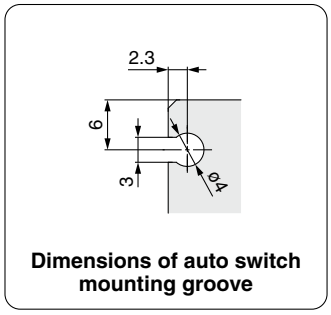

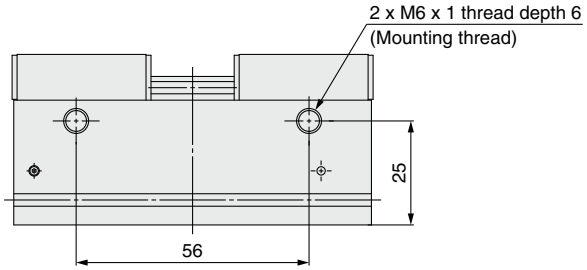

Dimensions: 20D1, 20D2

MHF2-20D1, 20D2

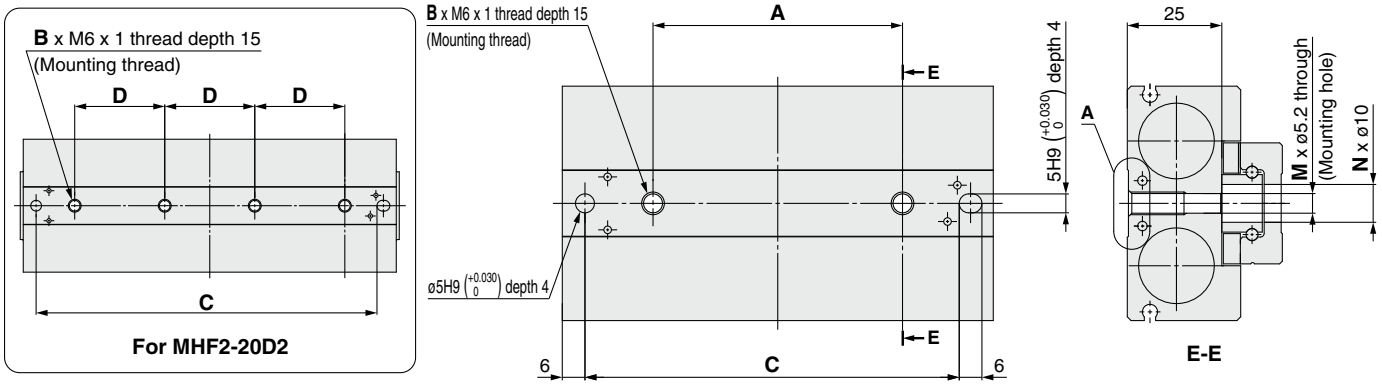

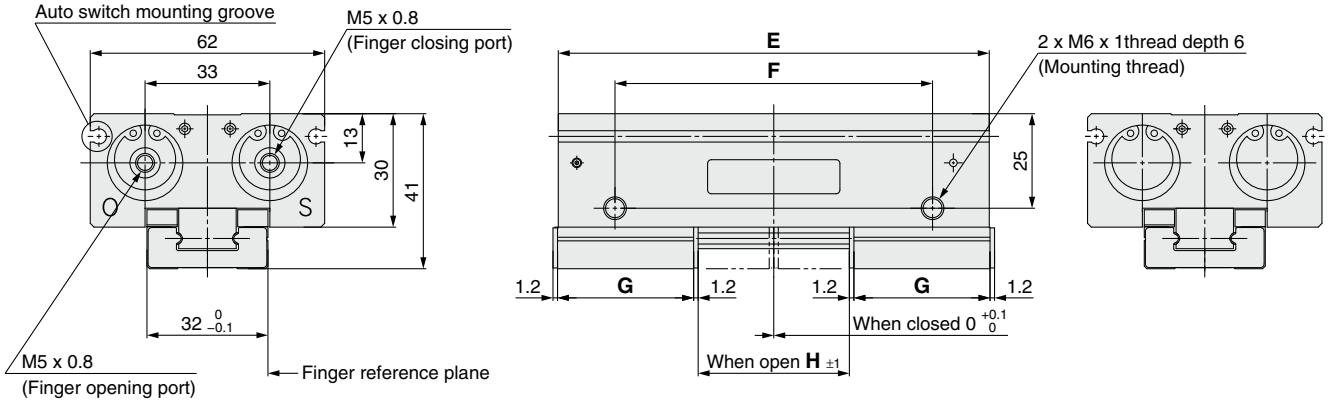

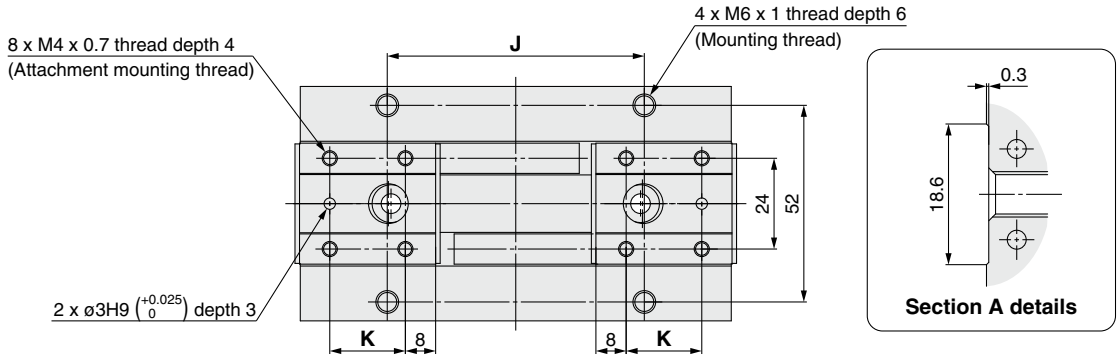

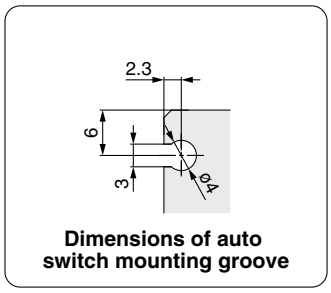

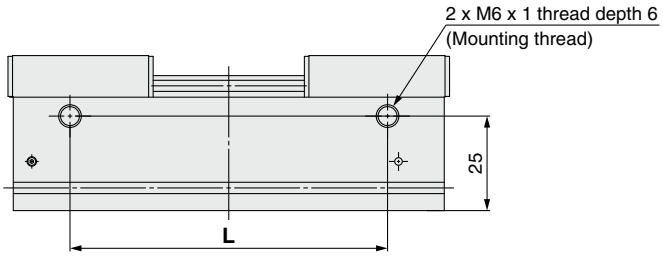

[mm]

Model	A	B	C	D	E	F	G	H	J	K	L	M	N
MHF2-20D1	66	2	99	—	114	84	36	40	68	20	84	2	2
MHF2-20D2	—	4	159	42	174	144	46	80	128	30	144	4	4

Dimensions: 25D

MHF2-25D

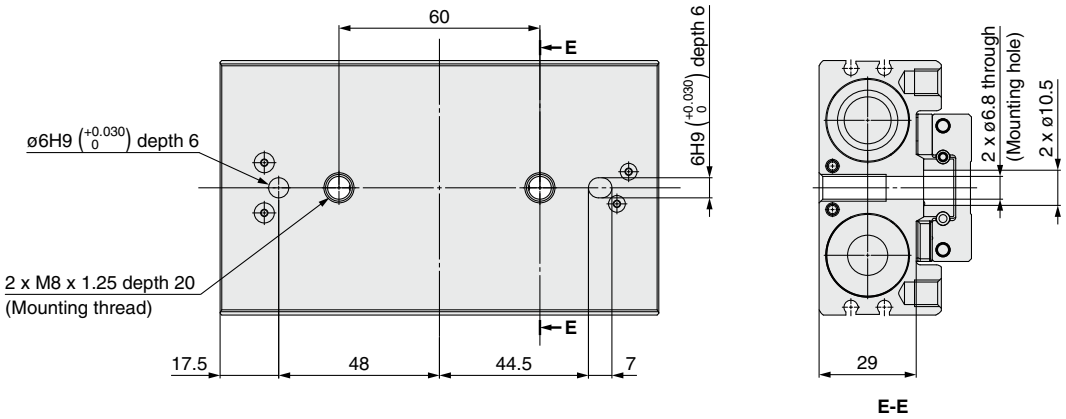

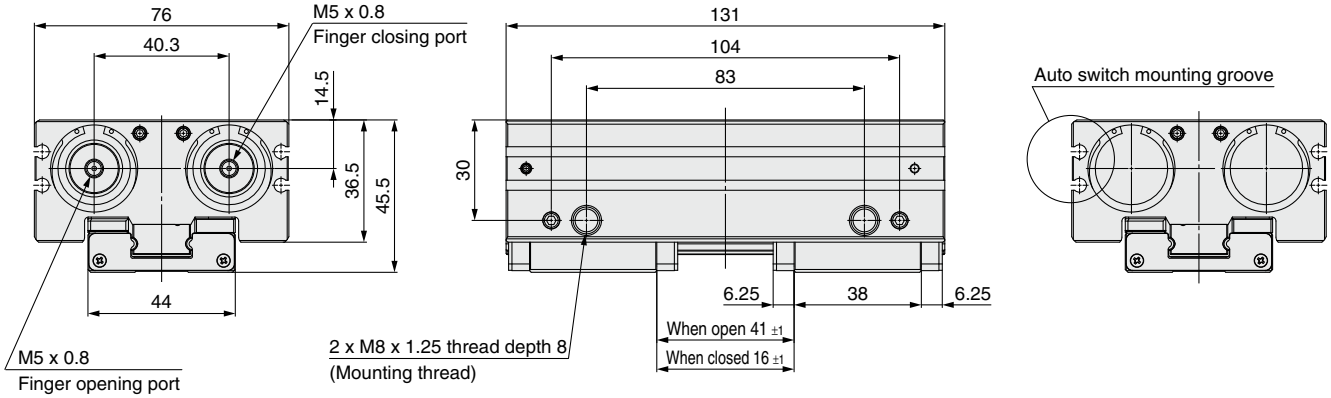

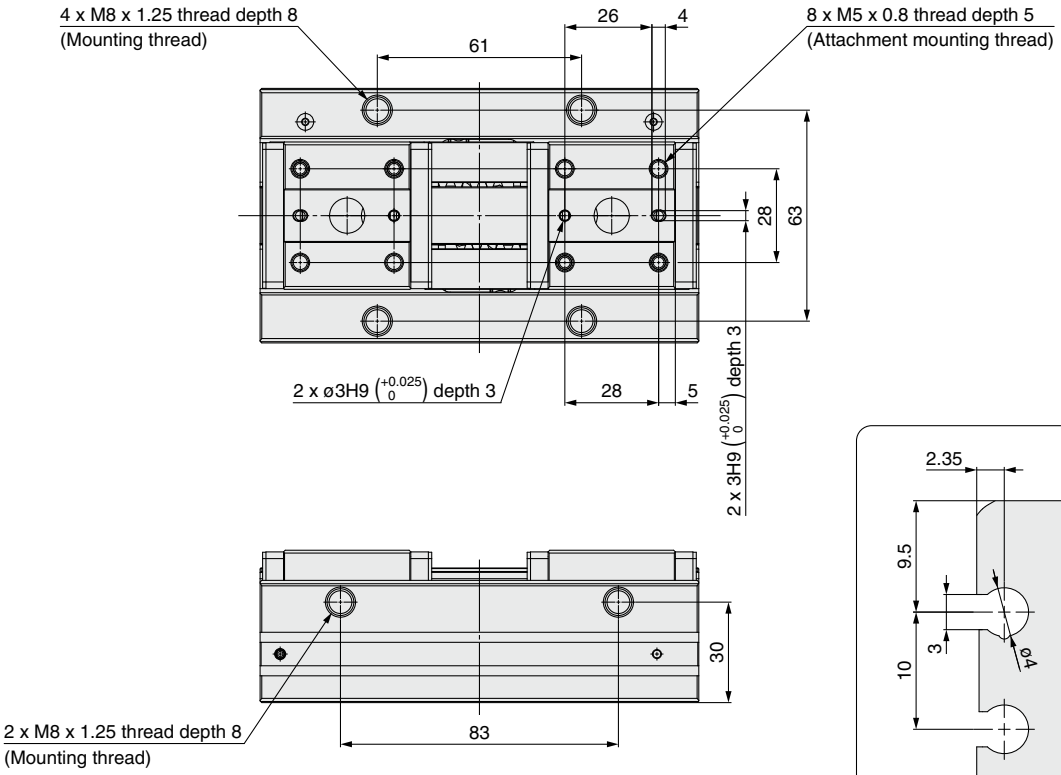

Dimensions: 25D1, 25D2

MHF2-25D1, 25D2

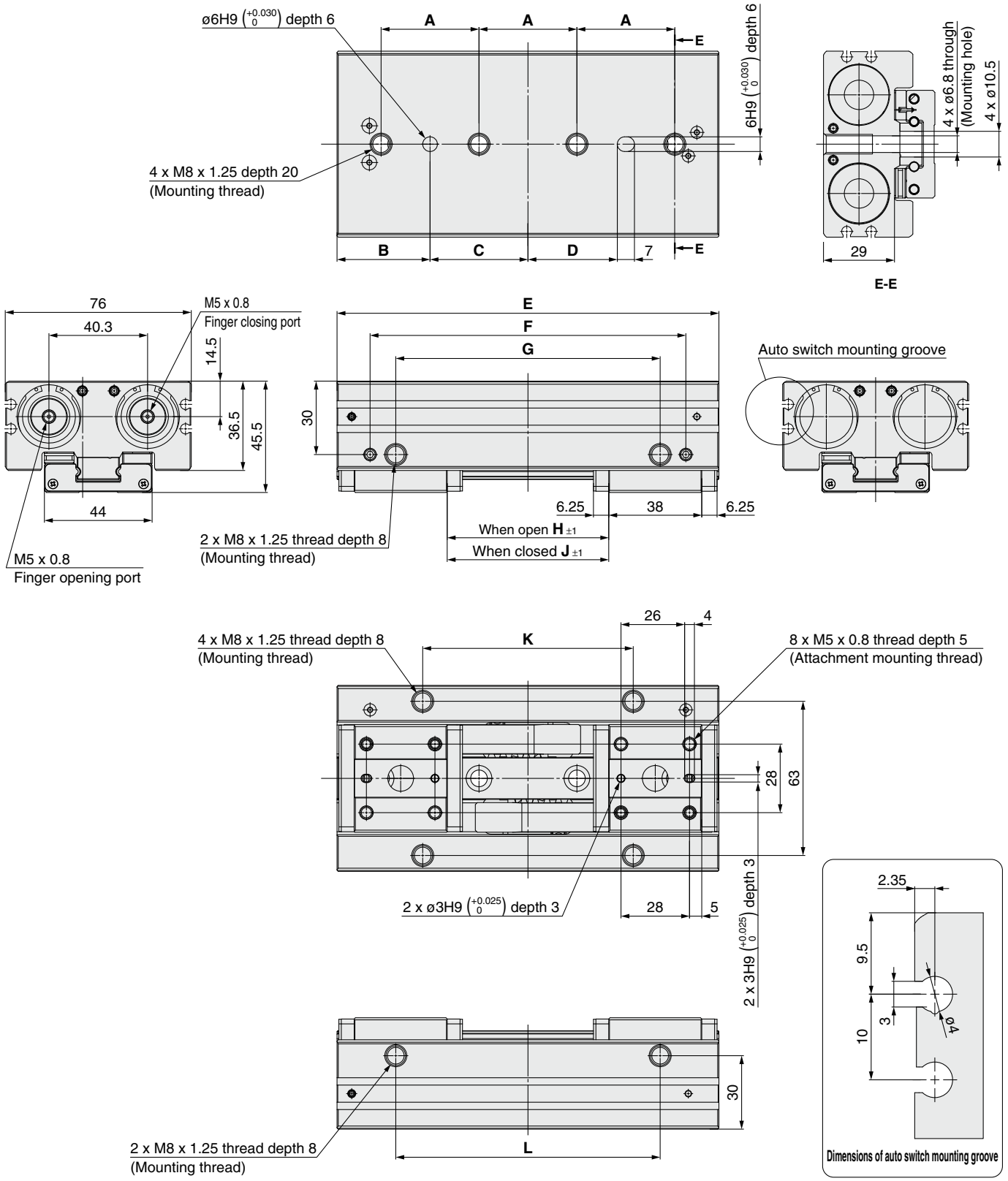

[mm]

Model	A	B	C	D	E	F	G	H	J	K	L
MHF2-25D1	40	38	40	36.5	156	129	108	66	16	86	108
MHF2-25D2	50	17	86	82.5	206	179	158	116	16	136	158

Dimensions: 32D

MHF2-32D

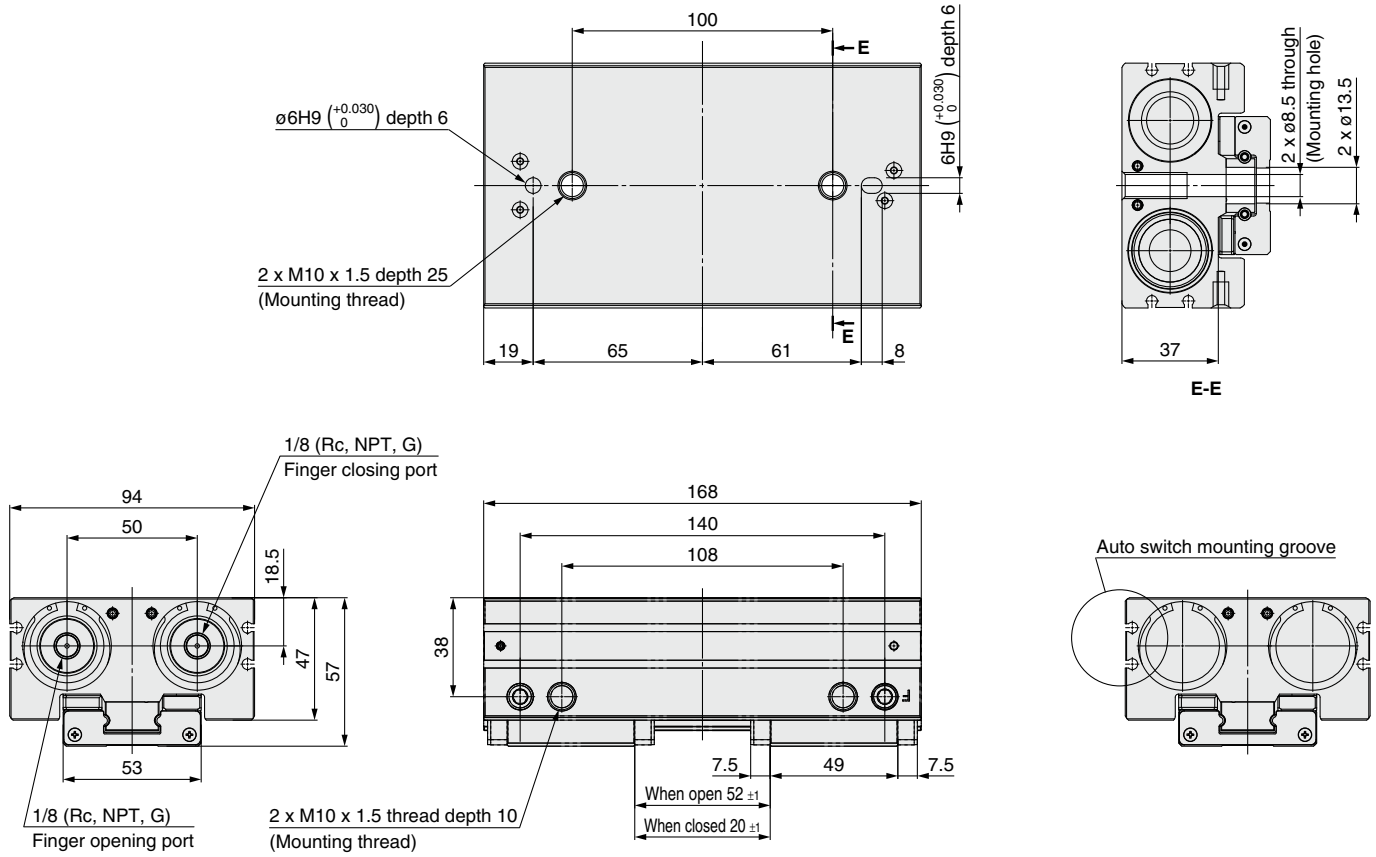

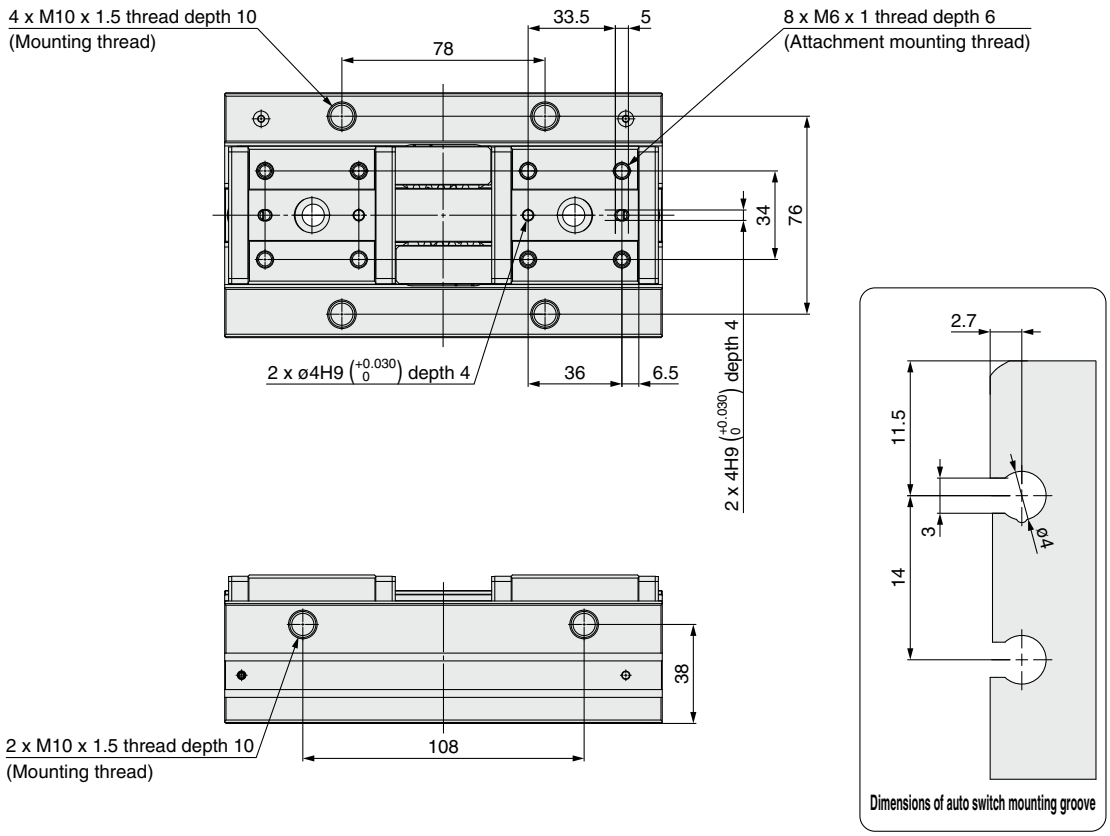

Dimensions: 32D1, 32D2

MHF2-32D1, 32D2

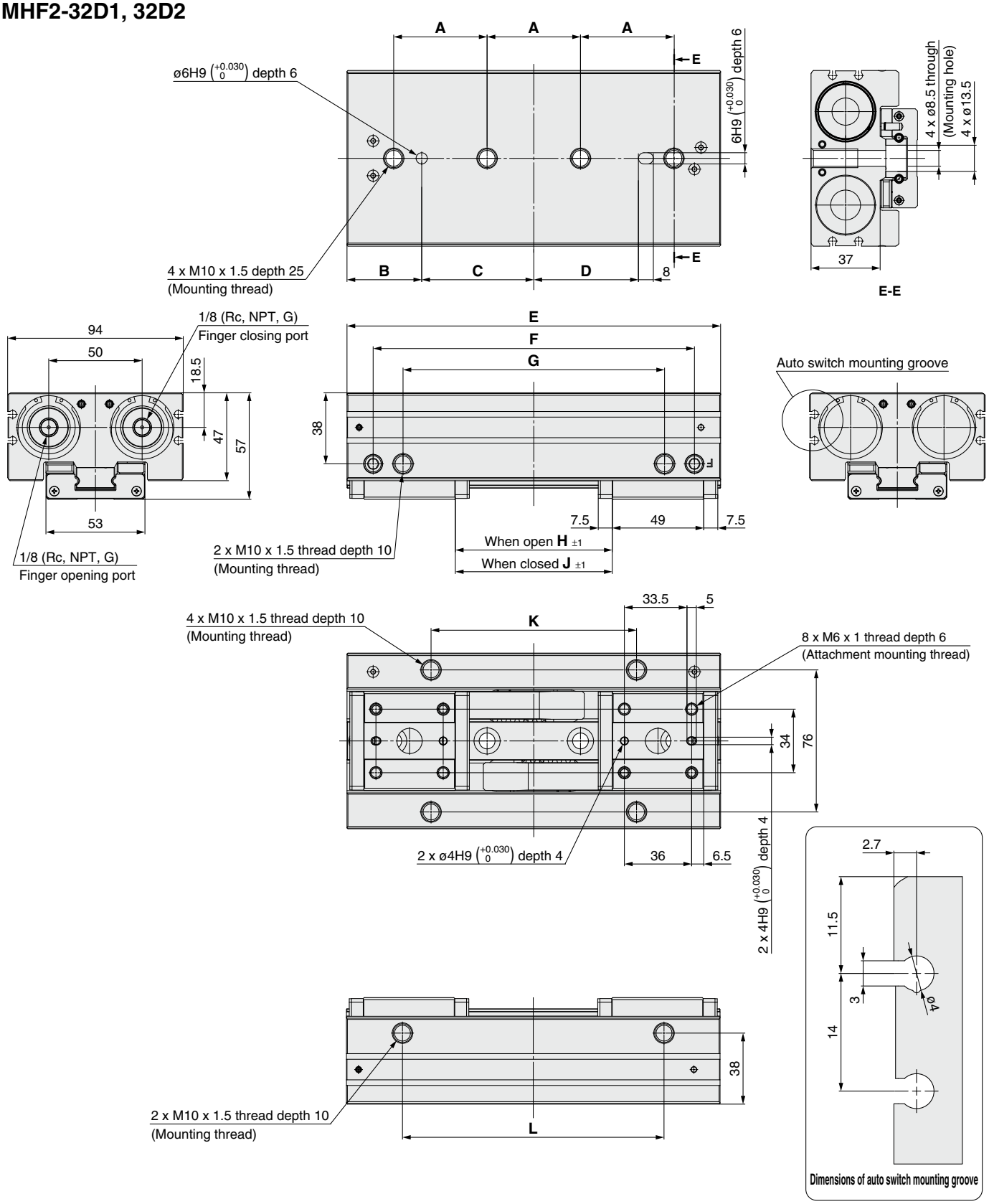

[mm]

Model	A	B	C	D	E	F	G	H	J	K	L
MHF2-32D1	50	40	60	56	200	172	140	84	20	110	140
MHF2-32D2	60	22	110	106	264	236	204	148	20	174	204

Body Option: Side Piping Type

MHF2-8DR
MHF2-8D1R

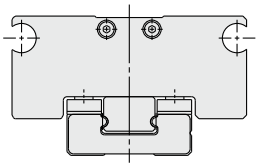

Port side of axial piping type

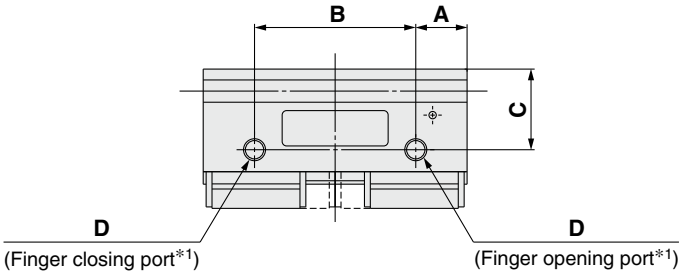

Body Option Dimensions

[mm]

Model	A	B	C	D
MHF2-8DR	5.5	25	11	M3 x 0.5
MHF2-8D1R		37		

MHF2-8D2R
MHF2-12D□R
MHF2-16D□R
MHF2-20D□R

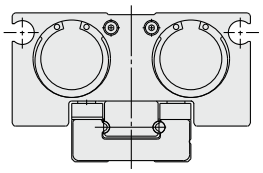

Port side of axial piping type

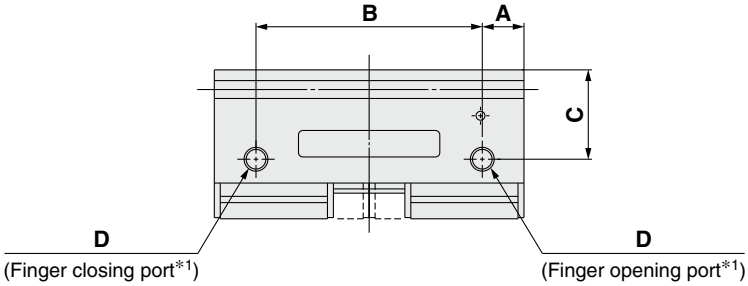

MHF2-25D□R
MHF2-32D□R

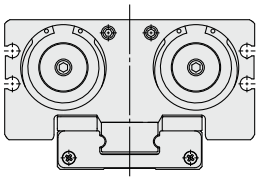

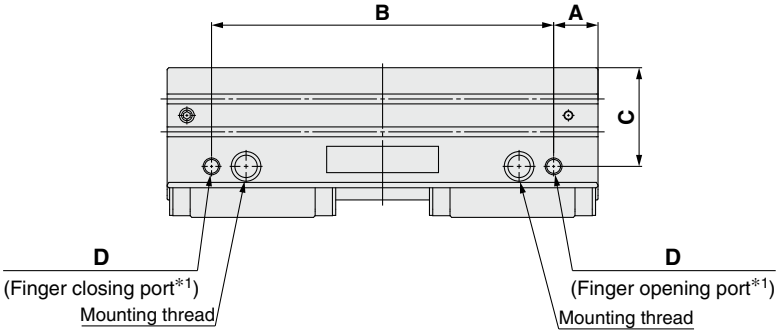

Body Option Dimensions

[mm]

Model	A	B	C	D
MHF2-8D2R	5.5	61	11	M3 x 0.5
MHF2-12DR	7	38	14.8	M5 x 0.8
MHF2-12D1R		54		
MHF2-12D2R		90		
MHF2-16DR	9	54	19	M5 x 0.8
MHF2-16D1R		76		
MHF2-16D2R		124		
MHF2-20DR	10	66	23	M5 x 0.8
MHF2-20D1R		94		
MHF2-20D2R		154		

[mm]

Model	A	B	C	D
MHF2-25DR	13.5	104	30	M5 x 0.8
MHF2-25D1R		129		
MHF2-25D2R		179		
MHF2-32DR	14	140	38	1/8 (Rc, NPT, G)
MHF2-32D1R		172		
MHF2-32D2R		236		

*1 There is no port on the other side of the product.
* For bore sizes ø8 to ø20, there are no mounting threads on the port side surface. However, there are mounting threads on the port side surface for bore sizes ø25 and ø32.
* Dimensions other than those shown above are the same as those of the axial piping type. For details, refer to the dimensions on pages 14 to 25.

MHF2 Series
Auto Switch Installation Examples and Mounting Positions

Various auto switch applications are possible through different combinations of auto switch quantities and detecting positions.

1) Detection when Gripping Exterior of a Workpiece

Detection example	① Confirmation of fingers in reset position	② Confirmation of a workpiece held	③ Confirmation of a workpiece released
Position to be detected	Position of fingers fully open 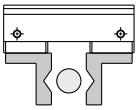	Position when gripping a workpiece 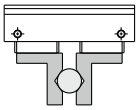	Position of fingers fully closed 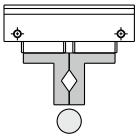
Operation of auto switches	When fingers return: Auto switch to turn ON (Light ON)	When gripping a workpiece: Auto switch to turn ON (Light ON)	When a workpiece is not held (Abnormal operation): Auto switch to turn ON (Light ON)
Detection combinations: One auto switch ∗ One position, any of ①, ② and ③ can be detected.	●	●	●
Detection combinations: Two auto switches ∗ Two positions of ①, ② and ③ can be detected. — Pattern A	●	●	—
Pattern B	—	●	●
Pattern C	●	—	●
How to determine auto switch installation position	Step 1) Fully open the fingers. 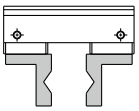	Step 1) Position fingers for gripping a workpiece. 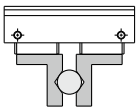	Step 1) Fully close the fingers. 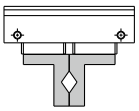
At no pressure or low pressure, connect the auto switch to a power supply, and follow the directions.	Step 2) Insert the auto switch into the auto switch mounting groove in the direction as shown in the illustration to the right. 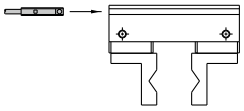		
	Step 3) Slide the auto switch in the direction of the arrow until the indicator light illuminates and fasten it at a position 0.3 to 0.5 mm in the direction of the arrow beyond the position where the indicator light illuminates. 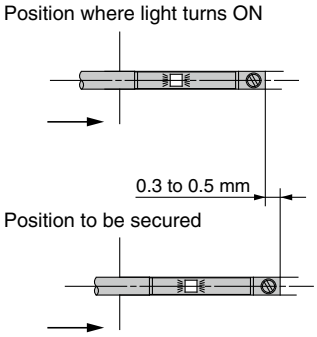	Step 3) Slide the auto switch in the direction of the arrow until the indicator light illuminates. 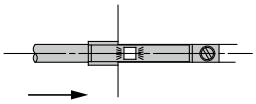 Step 4) Slide the auto switch further in the direction of the arrow until the indicator light goes out. 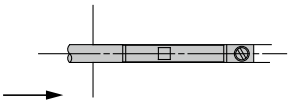 Step 5) Slide the auto switch in the opposite direction and fasten it at a position 0.3 to 0.5 mm beyond the position where the indicator light illuminates. 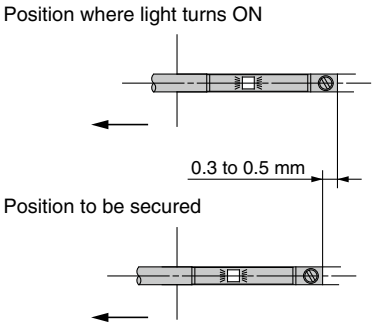	

∗ • It is recommended that gripping of a workpiece be performed close to the center of the finger stroke.
• When holding a workpiece close at the end of opening/closing stroke of fingers, detecting performance of the combinations listed in the table above may be limited, depending on the hysteresis of an auto switch, etc.

Various auto switch applications are possible through different combinations of auto switch quantities and detecting positions.

2) Internal Gripping

Detection example				① Confirmation of fingers in reset position	② Confirmation of a workpiece held	③ Confirmation of a workpiece released
Position to be detected				Position of fingers fully closed 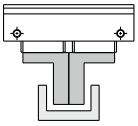	Position when gripping a workpiece 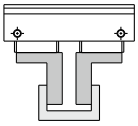	Position of fingers fully open 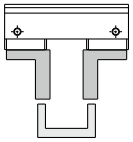
Operation of auto switches				When fingers return: Auto switch to turn ON (Light ON)	When gripping a workpiece: Auto switch to turn ON (Light ON)	When a workpiece is not held (Abnormal operation): Auto switch to turn ON (Light ON)
Detection combinations	One auto switch ＊ One position, any of ①, ② and ③ can be detected.			●	●	●
	Two auto switches ＊ Two positions of ①, ② and ③ can be detected.	Pattern	A	●	●	—
			B	—	●	●
			C	●	—	●
How to determine auto switch installation position				Step 1) Fully close the fingers. 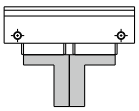	Step 1) Position fingers for gripping a workpiece. 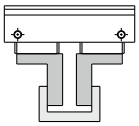	Step 1) Fully open the fingers. 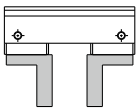
At no pressure or low pressure, connect the auto switch to a power supply, and follow the directions.				Step 2) Insert the auto switch into the auto switch mounting groove in the direction as shown in the illustration to the right. 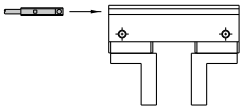		
				Step 3) Slide the auto switch in the direction of the arrow until the indicator light illuminates. 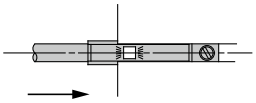 Step 4) Slide the auto switch further in the direction of the arrow until the indicator light goes out. 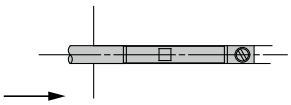 Step 5) Slide the auto switch in the opposite direction and fasten it at a position 0.3 to 0.5 mm beyond the position where the indicator light illuminates. Position where light turns ON 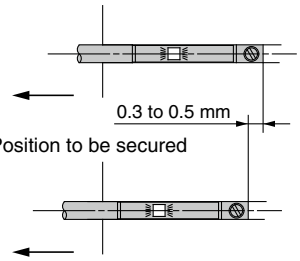	Step 3) Slide the auto switch in the direction of the arrow until the indicator light illuminates and fasten it at a position 0.3 to 0.5 mm in the direction of the arrow beyond the position where the indicator light illuminates. 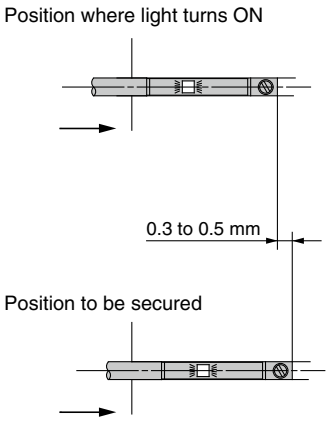	

＊ • It is recommended that gripping of a workpiece be performed close to the center of the finger stroke.
• When holding a workpiece close at the end of opening/closing stroke of fingers, detecting performance of the combinations listed in the table above may be limited, depending on the hysteresis of an auto switch, etc.

Auto Switch Hysteresis

Auto switches have hysteresis similar to micro switches.
Use the table below as a guide when adjusting auto switch positions, etc.

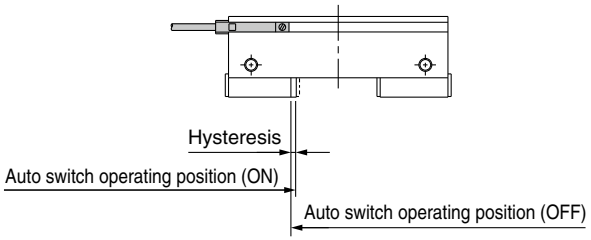

Hysteresis

	D-M9□(V) D-M9□W(V) D-M9□A(V)
MHF2-8D□	0.2
MHF2-12D□	0.3
MHF2-16D□	0.2
MHF2-20D□	0.5
MHF2-25D□	0.6
MHF2-32D□	0.5

Auto Switch Mounting

To set the auto switch, insert the auto switch into the auto switch mounting groove of the gripper from the direction as shown in the illustration below. After setting the position, tighten the attached auto switch mounting screw with a flat blade watchmaker's screwdriver.

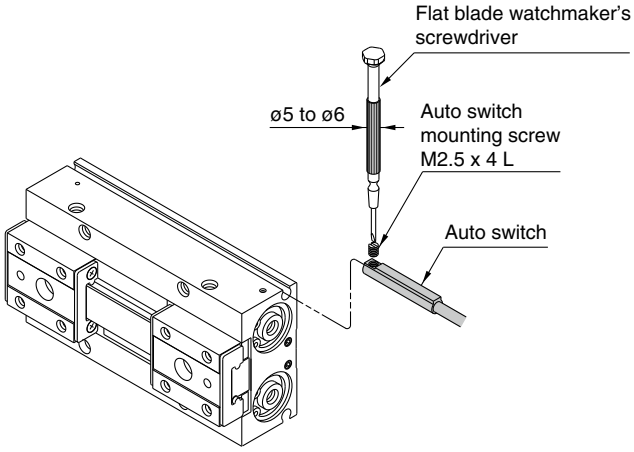

∗ Use a watchmaker's screwdriver with a grip diameter of 5 to 6 mm to tighten the auto switch mounting screw.
Also, tighten with a torque of about 0.05 to 0.15 N·m, or about 0.05 to 0.10 N·m for D-M9□A(V).

⚠ Caution

When using an auto switch on the mounting plate side, the switch will protrude from the end face as shown in the right figure. Please provide a run off space of 2 mm or more on the mounting plate.

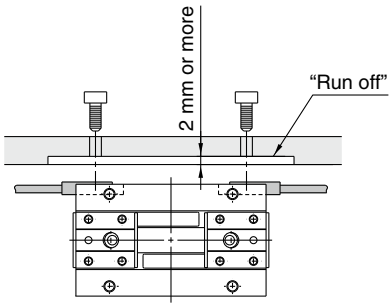

Protrusion of Auto Switch from Edge of Body

- The amount of auto switch protrusion from the body end surface is shown in the table below.
- Use this as a standard when mounting, etc.

Protrusion of Auto Switch

Lead wire type		In-line entry		Perpendicular entry	
Illustration		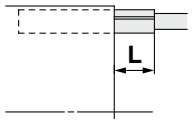		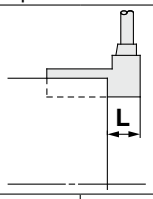	
Model \ Auto switch / Finger position		D-M9□ D-M9□W	D-M9□A	D-M9□V D-M9□WV	D-M9AV
MHF2-8D	Open	6.5	8.5	4.5	6.5
	Closed	6.5	8.5	4.5	6.5
MHF2-8D1	Open	6.5	8.5	4.5	6.5
	Closed	6.5	8.5	4.5	6.5
MHF2-8D2	Open	0.5	2.5	—	—
	Closed	0.5	2.5	—	—
MHF2-12D	Open	3	5	1	3
	Closed	3	5	1	3
MHF2-12D1	Open	1	3	—	—
	Closed	1	3	—	—
MHF2-12D2	Open	—	—	—	—
	Closed	—	—	—	—
MHF2-16D	Open	—	—	—	—
	Closed	—	—	—	—
MHF2-16D1	Open	—	—	—	—
	Closed	—	—	—	—
MHF2-16D2	Open	—	—	—	—
	Closed	—	—	—	—
MHF2-20D	Open	—	—	—	—
	Closed	—	—	—	—
MHF2-20D1	Open	—	—	—	—
	Closed	—	—	—	—
MHF2-20D2	Open	—	—	—	—
	Closed	—	—	—	—
MHF2-25D	Open	—	—	—	—
	Closed	—	—	—	—
MHF2-25D1	Open	—	—	—	—
	Closed	—	—	—	—
MHF2-25D2	Open	—	—	—	—
	Closed	—	—	—	—
MHF2-32D	Open	—	—	—	—
	Closed	—	—	—	—
MHF2-32D1	Open	—	—	—	—
	Closed	—	—	—	—
MHF2-32D2	Open	—	—	—	—
	Closed	—	—	—	—

∗ There is no protrusion for sections of the table with no values entered.

Made to Order

Please contact SMC for detailed dimensions, specifications, and delivery times.

1 **-X4** Heat Resistant (–10 to 100°C) ····· p. 31

2 **-X5** Fluororubber Seal ····· p. 31

3 **-X50** Without Magnet ····· p. 31

4 **-X53** Ethylene Propylene Rubber Seal (EPDM) ····· p. 32

5 **-X63** Fluorine Grease ····· p. 32

6 **-X79** Grease for Food Processing Machines: Fluorine Grease ····· p. 32

7 **-X79A** Grease for Food Processing Machines: Aluminum Complex Soap Base Grease ····· p. 33

8 **-X81□** Anti-corrosive Treatment of Finger ····· p. 33

-X81A (Special black chromium treatment is made on only the finger.)

-X81B (Special black chromium treatment is made on the finger and guide.)

9 **-X83** With An Adjustable Opening/Closing Finger Positioning ····· p. 34

10 **-X7050** Actuator Position Sensor Compatible Type ····· p. 37

1 Heat Resistant (–10 to 100°C)

Symbol **-X4**

Seal material and grease have been changed so that the product can be used at temperatures between –10 up to 100°C.

How to Order

Standard model no. – **X4**

Heat resistant

Specifications

Ambient temperature range	–10°C to 100°C (No freezing)
Seal material	Fluororubber
Grease	Heat-resistant grease (GR-F)
Specifications other than the above and dimensions	Same as those of the standard type

⚠ Warning

Precautions

Be aware that smoking cigarettes after your hands have come into contact with the grease used for this product can create a gas that is hazardous to humans.

∗ Magnet is built-in, but when using an auto switch, the acceptable temperature range becomes –10 to 60°C.
∗ For lubrication, specialized grease GR-F is recommended.

Replacement Parts: Seal Kit

Seal kit part number
MHF□□-PS-X4 (MHF8-PS-2-X4 for the MHF2-8D2-X4)

∗ Enter the cylinder bore size into □□ of the seal kit part number. Refer to pages 11 and 12 for the replacement parts.
∗ The seal kit does not include a grease pack. Order it separately.
Grease pack part number: GR-F-005 (5 g)

2 Fluororubber Seal

Symbol **-X5**

How to Order

Standard model no. – **X5**

Fluororubber seal

Specifications

Seal material	Fluororubber
Specifications other than the above and dimensions	Same as those of the standard type

∗ Please contact SMC, since the type of chemical and the operating temperature may not allow the use of this product.
∗ Since the standard type magnet is built-in, please contact SMC for the product's adaptability to the operating environment.

3 Without Magnet

Symbol **-X50**

How to Order

Standard model no. – **X50**

Without magnet

Specifications

Magnet	None
Specifications other than the above and dimensions	Same as those of the standard type

4 Ethylene Propylene Rubber Seal (EPDM)

Symbol **-X53**

Seal material has been changed to ethylene propylene (EPDM), and grease to fluorine grease.

How to Order

Standard model no. – X53

Ethylene propylene rubber seal (EPDM)

Specifications

Seal material	Ethylene propylene rubber (EPDM)
Grease	Fluorine grease (GR-F)
Specifications other than the above and dimensions	Same as those of the standard type

∗ For lubrication, specialized grease GR-F is recommended.
Grease pack part number: GR-F-005 (5 g)

⚠Warning

Precautions

Be aware that smoking cigarettes after your hands have come into contact with the grease used for this product can create a gas that is hazardous to humans.

5 Fluorine Grease

Symbol **-X63**

How to Order

Standard model no. – X63

Fluorine grease

⚠Warning

Precautions

Be aware that smoking cigarettes after your hands have come into contact with the grease used for this product can create a gas that is hazardous to humans.

∗ For lubrication, specialized grease GR-F is recommended.
Grease pack part number: GR-F-005 (5 g)

Specifications

Grease	Fluorine grease (GR-F)
Specifications other than the above and dimensions	Same as those of the standard type

6 Grease for Food Processing Machines: Fluorine Grease

Symbol **-X79**

Use grease for food processing machines (NSF-H1 certified/fluorine grease).

How to Order

Standard model no. – X79

Grease for food processing machines: Fluorine grease

⚠Warning

Precautions

Be aware that smoking cigarettes after your hands have come into contact with the grease used for this product can create a gas that is hazardous to humans.

⚠Caution

Do not use air grippers in a food-related environment.

<Not installable>

Food zone ····· Food may directly contact with air grippers, and is treated as food products.

<Installable>

Splash zone ····· Food may directly contact with air grippers, but is not treated as food products.

Non-food zone ····· Air grippers do not directly contact food.

∗ For lubrication, specialized grease GR-H is recommended.
Grease pack part number: GR-H-010 (10 g)

Specifications

Grease	Grease for food processing machines (NSF-H1 certified)/Fluorine grease
Specifications other than the above and dimensions	Same as those of the standard type

∗ If the fluorine grease is not applicable to the working environment, use "-X79A."

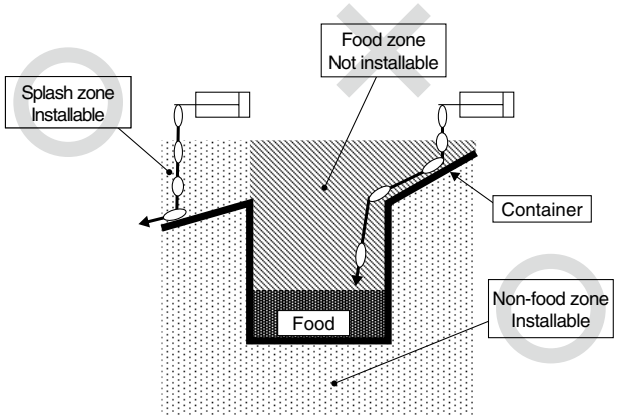

7 Grease for Food Processing Machines: Aluminum Complex Soap Base Grease

Symbol **-X79A**

Use grease for food processing machines (NSF-H1 certified).

How to Order

Standard model no.	– X79A

Grease for food processing machines: Aluminum complex soap base grease

⚠ Caution

Do not use air grippers in a food-related environment.

<Not installable>

Food zone ····· Food may directly contact with air grippers, and is treated as food products.

<Installable>

Splash zone ····· Food may directly contact with air grippers, but is not treated as food products.

Non-food zone ····· Air grippers do not directly contact food.

∗ For lubrication, specialized grease GR-R is recommended.
Grease pack part number: GR-R-010 (10 g)

Specifications

Grease	Grease for food processing machines (NSF-H1 certified)/Aluminum complex soap base grease
Specifications other than the above and dimensions	Same as those of the standard type

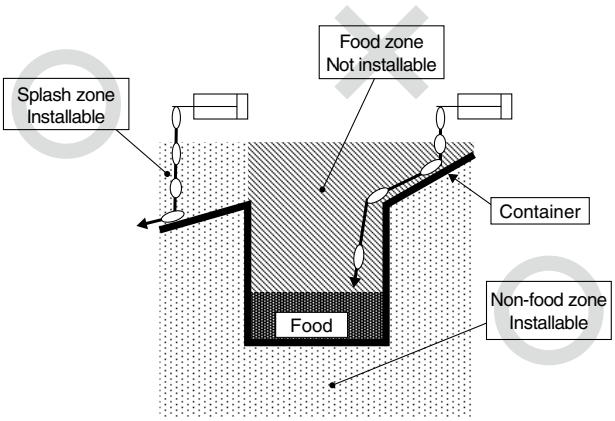

8 Anti-corrosive Treatment of Finger

Symbol **-X81□**

- Special black chromium treatment
- The finger and guide use the martensitic stainless steel. When anti-corrosive measures better than the martensitic stainless steel level are required, use these series.

How to Order

Standard model no.	– X81A

Anti-corrosive treatment of finger

Standard model no.	– X81B

Anti-corrosive treatment of finger and guide

Specifications

Treatment	Special black chromium treatment
Specifications other than the above and dimensions	Same as those of the standard type

9 With An Adjustable Opening/Closing Finger Positioning

Symbol **-X83**

- Stroke can be adjusted to suit the workpiece
- 3 types of opening/closing finger stroke adjustments (Adjustable finger opening/closing position type, Adjustable finger opening position type, Adjustable finger closed position type)

■Various strokes

● Standardized 3 stroke types and 2 stroke adjustment types for fine tuning

Bore size [mm]	Short stroke		Medium stroke		Long stroke	
	Full stroke	Stroke adjustable width	Full stroke	Stroke adjustable width	Full stroke	Stroke adjustable width
ø8	8 mm	Short Adjuster **4** mm Long Adjuster **8** mm	16 mm	Short Adjuster **6** mm Long Adjuster **10** mm	32 mm	Short Adjuster **12** mm Long Adjuster **22** mm
ø12	12 mm	Short Adjuster **8** mm Long Adjuster **12** mm	24 mm	Short Adjuster **8** mm Long Adjuster **14** mm	48 mm	Short Adjuster **18** mm Long Adjuster **28** mm
ø16	16 mm	Short Adjuster **10** mm Long Adjuster **14** mm	32 mm	Short Adjuster **8** mm Long Adjuster **18** mm	64 mm	Short Adjuster **16** mm Long Adjuster **36** mm
ø20	20 mm	Short Adjuster **8** mm Long Adjuster **18** mm	40 mm	Short Adjuster **10** mm Long Adjuster **20** mm	80 mm	Short Adjuster **20** mm Long Adjuster **40** mm

How to Order

Standard model no. – **X83** **A** **2**

● **Stroke adjustable width**

1	Short adjuster
2	Long adjuster

● **Stroke adjustable side**

A	Both sides
B	Opening side
C	Closed side

● **With an adjustable opening/closing finger positioning**

9 With An Adjustable Opening/Closing Finger Positioning

Symbol **-X83**

Specifications

Finger Stroke Adjustable Width for Opening/Closing Position

[mm]

Model		Full stroke	Adjustable stroke width	A: Adjustable finger opening/closing position type		B: Adjustable finger opening position type	C: Adjustable finger closing position type
				Adjustable stroke width		Adjustable stroke width for opening position	Adjustable stroke width for closed position
				Closed position	Opening position		
MHF2-8D□	Short Adjuster (**-X83□1**)	8	4	0 to 4	4 to 8	4 to 8	0 to 4
	Long Adjuster (**-X83□2**)		8	0 to 8	0 to 8	0 to 8	0 to 8
MHF2-8D1□	Short Adjuster (**-X83□1**)	16	6	0 to 6	10 to 16	10 to 16	0 to 6
	Long Adjuster (**-X83□2**)		10	0 to 10	6 to 16	6 to 16	0 to 10
MHF2-8D2□	Short Adjuster (**-X83□1**)	32	12	0 to 12	20 to 32	20 to 32	0 to 12
	Long Adjuster (**-X83□2**)		22	0 to 22	10 to 32	10 to 32	0 to 22
MHF2-12D□	Short Adjuster (**-X83□1**)	12	8	0 to 8	4 to 12	4 to 12	0 to 8
	Long Adjuster (**-X83□2**)		12	0 to 12	0 to 12	0 to 12	0 to 12
MHF2-12D1□	Short Adjuster (**-X83□1**)	24	8	0 to 8	16 to 24	16 to 24	0 to 8
	Long Adjuster (**-X83□2**)		14	0 to 14	10 to 24	10 to 24	0 to 14
MHF2-12D2□	Short Adjuster (**-X83□1**)	48	18	0 to 18	30 to 48	30 to 48	0 to 18
	Long Adjuster (**-X83□2**)		28	0 to 28	20 to 48	20 to 48	0 to 28
MHF2-16D□	Short Adjuster (**-X83□1**)	16	10	0 to 10	6 to 16	6 to 16	0 to 10
	Long Adjuster (**-X83□2**)		14	0 to 14	2 to 16	2 to 16	0 to 14
MHF2-16D1□	Short Adjuster (**-X83□1**)	32	8	0 to 8	24 to 32	24 to 32	0 to 8
	Long Adjuster (**-X83□2**)		18	0 to 18	14 to 32	14 to 32	0 to 18
MHF2-16D2□	Short Adjuster (**-X83□1**)	64	16	0 to 16	48 to 64	48 to 64	0 to 16
	Long Adjuster (**-X83□2**)		36	0 to 36	28 to 64	28 to 64	0 to 36
MHF2-20D□	Short Adjuster (**-X83□1**)	20	8	0 to 8	12 to 20	12 to 20	0 to 8
	Long Adjuster (**-X83□2**)		18	0 to 18	2 to 20	2 to 20	0 to 18
MHF2-20D1□	Short Adjuster (**-X83□1**)	40	10	0 to 10	30 to 40	30 to 40	0 to 10
	Long Adjuster (**-X83□2**)		20	0 to 20	20 to 40	20 to 40	0 to 20
MHF2-20D2□	Short Adjuster(**-X83□1**)	80	20	0 to 20	60 to 80	60 to 80	0 to 20
	Long Adjuster (**-X83□2**)		40	0 to 40	40 to 80	40 to 80	0 to 40

∗ Specifications and details other than those shown above are the same as those of the standard type.

How to Adjust Finger Stroke

After adjusting the opening/closing width adjustment thread, tighten the nut to fix.

Nut Tightening Torque

Part no.	Thread size	Tightening torque [N·m]
MHF2-8D□-X83□□	M4 x 0.7	1.5
MHF2-8D□R-X83□□		
MHF2-12D□-X83□□	M5 x 0.8	3.0
MHF2-12D□R-X83□□		
MHF2-16D□-X83□□	M6 x 1.0	5.2
MHF2-16D□R-X83□□		
MHF2-20D□-X83□□	M8 x 1.25	12.5
MHF2-20D□R-X83□□		

⚠ Warning

1. Adjust the stroke adjustment screw within the adjustable width.

If you adjust the adjustment screw beyond the maximum value, the adjustment screw may fall out and may cause damage to human bodies or equipment/devices.

2. Do not adjust stroke when air pressure is applied to the adjustment screw side.

If air pressure is applied to the adjustment screw, the adjustment screw may fall out in some adjustment statuses. When applying pressure, make sure the adjustment screw is tightened enough.

9 With An Adjustable Opening/Closing Finger Positioning

Symbol **-X83**

Dimensions (The dimensions below are the same as those of the standard type.)

Adjustable finger opening/closing position type: MHF2-□-X83A1 X83A2

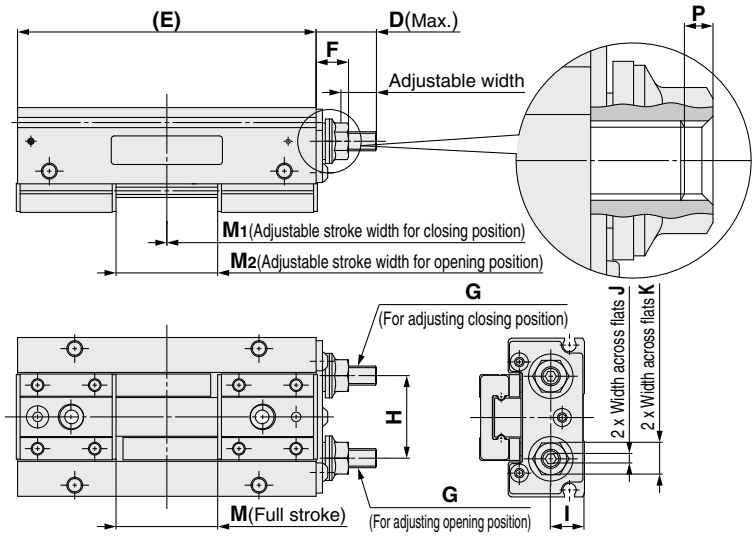

Adjustable finger opening position type/MHF2-□-X83B1 X83B2

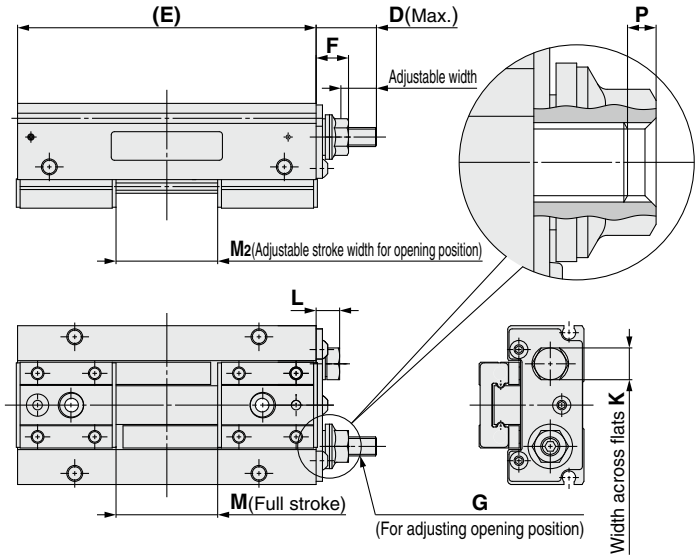

Adjustable finger closing position type/MHF2-□-X83C1 X83C2

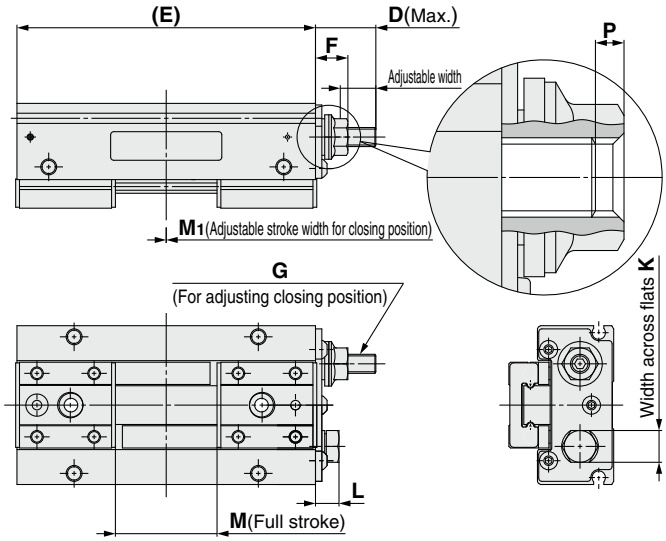

Dimensions (The □ in the table below indicates the symbol for stroke adjustable side (**A**: Adjustable finger opening/closing position type, **B**: Adjustable finger opening position type, or **C**: Adjustable finger closing position type).) [mm]

Model		A: Adjustable finger opening/closing position type		B: Adjustable finger opening position type		C: Adjustable finger closing position type		D	(E)	F	G	H	I	J	K	L	M	P
		M_1	M_2	M_1	M_2	M_1	M_2											
MHF2-8D□	-X83□1	0 to 4	4 to 8	–	4 to 8	0 to 4	–	9	36	6.8	M4 x 0.7	15.8	5.9	2	7	4.6	8	1.8
	-X83□2	0 to 8	0 to 8	–	0 to 8	0 to 8	–	12										
MHF2-8D1□	-X83□1	0 to 6	10 to 16	–	10 to 16	0 to 6	–	10	48								16	
	-X83□2	0 to 10	6 to 16	–	6 to 16	0 to 10	–	12										
MHF2-8D2□	-X83□1	0 to 12	20 to 32	–	20 to 32	0 to 12	–	13	72								32	
	-X83□2	0 to 22	10 to 32	–	10 to 32	0 to 22	–	18										
MHF2-12D□	-X83□1	0 to 8	4 to 12	–	4 to 12	0 to 8	–	12	52	8.2	M5 x 0.8	20	7.7	2.5	8	5.4	12	2.3
	-X83□2	0 to 12	0 to 12	–	0 to 12	0 to 12	–	14										
MHF2-12D1□	-X83□1	0 to 8	16 to 24	–	16 to 24	0 to 8	–	12	68								24	
	-X83□2	0 to 14	10 to 24	–	10 to 24	0 to 14	–	15										
MHF2-12D2□	-X83□1	0 to 18	30 to 48	–	30 to 48	0 to 18	–	18	104								48	
	-X83□2	0 to 28	20 to 48	–	20 to 48	0 to 28	–	23										
MHF2-16D□	-X83□1	0 to 10	6 to 16	–	6 to 16	0 to 10	–	15	72	10.2	M6 x 1	26	10.6	3	10	7.4	16	2.4
	-X83□2	0 to 14	2 to 16	–	2 to 16	0 to 14	–	17										
MHF2-16D1□	-X83□1	0 to 8	24 to 32	–	24 to 32	0 to 8	–	14	94								32	
	-X83□2	0 to 18	14 to 32	–	14 to 32	0 to 18	–	19										
MHF2-16D2□	-X83□1	0 to 16	48 to 64	–	48 to 64	0 to 16	–	18	142								64	
	-X83□2	0 to 36	28 to 64	–	28 to 64	0 to 36	–	28										
MHF2-20D□	-X83□1	0 to 8	12 to 20	–	12 to 20	0 to 8	–	18	86	13.2	M8 x 1.25	33	13	4	12	9.9	20	3
	-X83□2	0 to 18	2 to 20	–	2 to 20	0 to 18	–	23										
MHF2-20D1□	-X83□1	0 to 10	30 to 40	–	30 to 40	0 to 10	–	18	114								40	
	-X83□2	0 to 20	20 to 40	–	20 to 40	0 to 20	–	23										
MHF2-20D2□	-X83□1	0 to 20	60 to 80	–	60 to 80	0 to 20	–	23	174								80	
	-X83□2	0 to 40	40 to 80	–	40 to 80	0 to 40	–	33										

10 Actuator Position Sensor Compatible Type

Symbol
-X7050

- The stroke position is output with an analog signal.
- Repeatability: 0.1 mm
- Direct mounting is possible.
- Analog output, Switch output

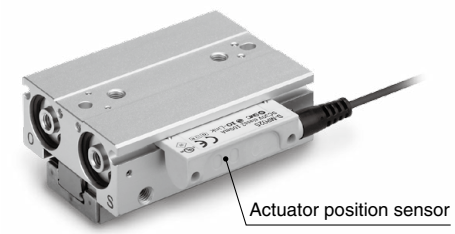

Applicable Actuator Position Sensors (Full stroke length detectable)

Stroke	Bore size			
	ø8	ø12	ø16	ø20
Short stroke	Not available	D-MP025□	D-MP025□	D-MP025□
Medium stroke	D-MP025□	D-MP025□	D-MP025□	D-MP025□
Long stroke	D-MP025□	D-MP050□	D-MP050□	D-MP050□

Specifications: Same as those of the standard type

How to Order

MHF2 − □□□□ − X7050

- **Actuator position sensor compatible type**
- **Refer to the standard model number on page 9.**

∗ The short stroke type cannot be used for the ø8 because the mounting dimension is too short.
∗ The actuator position sensor is not included with the product. It must be ordered separately.
∗ D-M9 series auto switches cannot be used.

∗ For details on the actuator position sensor (D-MP series), refer to the **Web Catalog**.

10 Actuator Position Sensor Compatible Type

Symbol
-X7050

Actuator Position Sensor Mounting Position (Guide)

This is a guideline for the mounting position when detecting the full stroke length.
∗ Adjust the sensor after confirming the operating conditions in the actual setting.

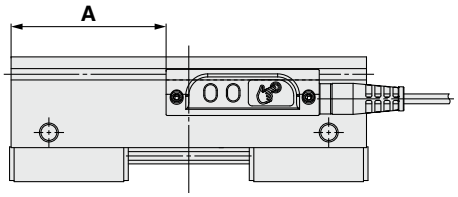

When the sensor is mounted upward

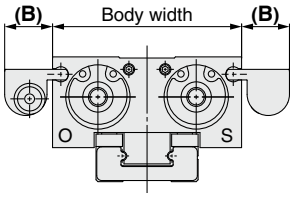

Name plate or R port surface

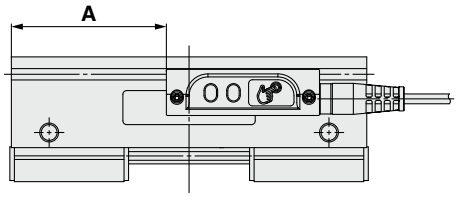

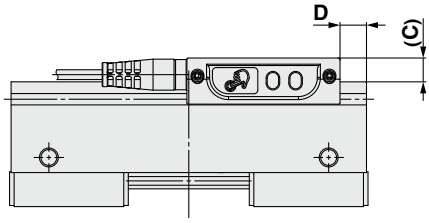

When the sensor is mounted downward

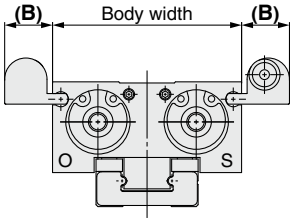

Name plate or R port surface

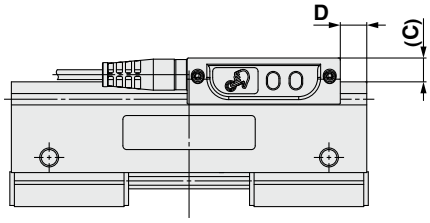

Actuator Position Sensor Mounting Position Guide

Model	A	(B)	(C)	D	Applicable actuator position sensor
MHF2-8D1(R)-X7050	5.5 to 7.5	(15)	(8.5)	0 to 1	D-MP025□
MHF2-8D2(R)-X7050	26.5 to 31.5	(15)	(8.5)	0 to 3.5	
MHF2-12D(R)-X7050	6 to 11.5	(15)	(8)	0 to 4	
MHF2-12D1(R)-X7050	19.5 to 27.5	(15)	(8)	0 to 6.5	
MHF2-12D2(R)-X7050	24 to 39	(15)	(8)	0 to 14	D-MP050□
MHF2-16D(R)-X7050	19 to 31.5	(14)	(7)	0 to 11	D-MP025□
MHF2-16D1(R)-X7050	36 to 44.5	(14)	(7)	0 to 13.5	
MHF2-16D2(R)-X7050	56 to 71	(14)	(7)	5.5 to 20.5	D-MP050□
MHF2-20D(R)-X7050	31 to 43	(14)	(5.5)	1 to 13	D-MP025□
MHF2-20D1(R)-X7050	54 to 56	(14)	(5.5)	15.5 to 17.5	
MHF2-20D2(R)-X7050	80 to 87	(14)	(5.5)	22 to 29	D-MP050□

∗ The □ in the applicable actuator position sensor part numbers indicates the lead wire type. For details, refer to the actuator position sensor in the **Web Catalog**.

For the Side Piping Type

When the sensor is mounted on the same surface as the piping port on the side piping type, there will be interference between the sensor and the fitting and the speed controller, resulting in restricted use.

Model	Sensor: Upward	Sensor: Downward
MHF2-8D1R-X7050	×	○
MHF2-8D2R-X7050	×	○
MHF2-12DR-X7050	×	○
MHF2-12D1R-X7050	×	○
MHF2-12D2R-X7050	×	○
MHF2-16DR-X7050	×	○
MHF2-16D1R-X7050	×	○
MHF2-16D2R-X7050	×	○
MHF2-20DR-X7050	○	○
MHF2-20D1R-X7050	○	○
MHF2-20D2R-X7050	○	○

When the sensor is mounted upward

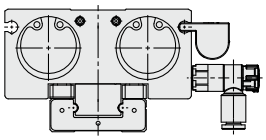

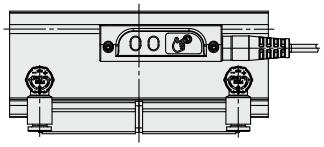

MHF2 Series
Specific Product Precautions

Be sure to read this before handling the products. Refer to the back cover for safety instructions. For air gripper and auto switch precautions, refer to the "Handling Precautions for SMC Products" and the "Operation Manual" on the SMC website: https://www.smcworld.com

Handling

⚠Caution

How to Locate Finger and Attachment

● **Positioning in the finger's open/close direction**

Position the finger and the attachment by inserting the finger's pin into the attachment's pin insertion hole.

Provide the following pin insertion hole dimensions: shaft-basis fitting dimension **C** for the open/close direction; slotted hole with relief **B** for the cross direction.

● **Positioning in the finger's cross direction**

For ø8 to ø20

Perform the positioning from the reference plane of the finger and the side A of the attachment.

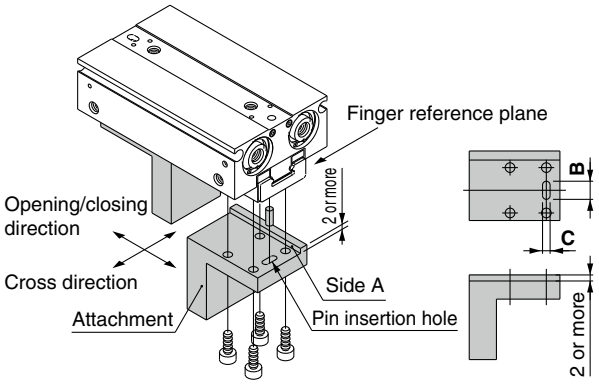

For ø25, ø32

Positioning in the finger cross direction is done not from the finger reference plane but from the pin hole reference in the center.

For bore sizes ø8 to ø20, a finite orbit type guide is used in the finger part. By using this, when there are inertial force which cause by movements or rotation to the actuator, steel ball will move to one side and this will cause a large resistance and degrade the accuracy. When there are inertial force which cause by movements or rotation to the actuator, operate the finger to full stroke.

Especially in long stroke type, the accuracy of the finger may degrade.

Operating Environment

⚠Caution

Use caution for the anti-corrosiveness of linear guide section.

Especially, rust may be generated in an environment where waterdrops are likely to adhere due to condensation, etc.

⚠ Safety Instructions

These safety instructions are intended to prevent hazardous situations and/or equipment damage. These instructions indicate the level of potential hazard with the labels of **"Caution," "Warning"** or **"Danger."** They are all important notes for safety and must be followed in addition to International Standards (ISO/IEC)*1), and other safety regulations.

⚠ Danger : **Danger** indicates a hazard with a high level of risk which, if not avoided, will result in death or serious injury.

⚠ Warning: **Warning** indicates a hazard with a medium level of risk which, if not avoided, could result in death or serious injury.

⚠ Caution: **Caution** indicates a hazard with a low level of risk which, if not avoided, could result in minor or moderate injury.

*1) ISO 4414: Pneumatic fluid power - General rules and safety requirements for systems and their components
ISO 4413: Hydraulic fluid power - General rules and safety requirements for systems and their components
IEC 60204-1: Safety of machinery - Electrical equipment of machines - Part 1: General requirements
ISO 10218-1: Robots and robotic devices - Safety requirements for industrial robots - Part 1:Robots
etc.

⚠ Warning

1. The compatibility of the product is the responsibility of the person who designs the equipment or decides its specifications.

Since the product specified here is used under various operating conditions, its compatibility with specific equipment must be decided by the person who designs the equipment or decides its specifications based on necessary analysis and test results. The expected performance and safety assurance of the equipment will be the responsibility of the person who has determined its compatibility with the product. This person should also continuously review all specifications of the product referring to its latest catalog information, with a view to giving due consideration to any possibility of equipment failure when configuring the equipment.

2. Only personnel with appropriate training should operate machinery and equipment.

The product specified here may become unsafe if handled incorrectly. The assembly, operation and maintenance of machines or equipment including our products must be performed by an operator who is appropriately trained and experienced.

3. Do not service or attempt to remove product and machinery/ equipment until safety is confirmed.

1. The inspection and maintenance of machinery/equipment should only be performed after measures to prevent falling or runaway of the driven objects have been confirmed.
2. When the product is to be removed, confirm that the safety measures as mentioned above are implemented and the power from any appropriate source is cut, and read and understand the specific product precautions of all relevant products carefully.
3. Before machinery/equipment is restarted, take measures to prevent unexpected operation and malfunction.

4. SMC products cannot be used beyond their specifications. They are not developed, designed, and manufactured to be used under the following conditions or environments. Use under such conditions or environments is not allowed.

1. Conditions and environments outside of the given specifications, or use outdoors or in a place exposed to direct sunlight.
2. Use for nuclear power, railways, aviation, space equipment, ships, vehicles, military application, equipment affecting human life, body, and property, combustion equipment, entertainment equipment, emergency shut-off circuits, press clutches, brake circuits, safety equipment, etc., and use for applications that do not conform to standard specifications such as catalogs and operation manuals.
3. Use for interlock circuits, except for use with double interlock such as installing a mechanical protection function in case of failure. Please periodically inspect the product to confirm that the product is operating properly.

⚠ Caution

SMC develops, designs, and manufactures products to be used for automatic control equipment, and provides them for peaceful use in manufacturing industries.
Use in non-manufacturing industries is not allowed.
Products SMC manufactures and sells cannot be used for the purpose of transactions or certification specified in the Measurement Act of each country.
The new Measurement Act prohibits use of any unit other than SI units in Japan.

Limited warranty and Disclaimer/ Compliance Requirements

The product used is subject to the following "Limited warranty and Disclaimer" and "Compliance Requirements".
Read and accept them before using the product.

Limited warranty and Disclaimer

1. The warranty period of the product is 1 year in service or 1.5 years after the product is delivered, whichever is first.*2)
   Also, the product may have specified durability, running distance or replacement parts. Please consult your nearest sales branch.
2. For any failure or damage reported within the warranty period which is clearly our responsibility, a replacement product or necessary parts will be provided.
   This limited warranty applies only to our product independently, and not to any other damage incurred due to the failure of the product.
3. Prior to using SMC products, please read and understand the warranty terms and disclaimers noted in the specified catalog for the particular products.

***2) Suction cups (Vacuum pads) are excluded from this 1 year warranty.**
A suction cup (vacuum pad) is a consumable part, so it is warranted for a year after it is delivered.
Also, even within the warranty period, the wear of a product due to the use of the suction cup (vacuum pad) or failure due to the deterioration of rubber material are not allowed by the limited warranty.

Compliance Requirements

1. The use of SMC products with production equipment for the manufacture of weapons of mass destruction (WMD) or any other weapon is strictly prohibited.
2. The exports of SMC products or technology from one country to another are governed by the relevant security laws and regulations of the countries involved in the transaction. Prior to the shipment of a SMC product to another country, assure that all local rules governing that export are known and followed.

Revision History

Edition B	* An actuator position sensor compatible type has been added.	ZY
Edition C	* Bore sizes ø25 and ø32 have been added. * The number of pages has been increased from 40 to 44.	

⚠ Safety Instructions Be sure to read the "Handling Precautions for SMC Products" (M-E03-3) and "Operation Manual" before use.

Specifications are subject to change without prior notice and any obligation on the part of the manufacturer.
© 2024 SMC Corporation All Rights Reserved