SICK.COM

DATA SHEET

WT34-B410

W34
Photoelectric sensors

SICK Sensor Intelligence

Illustration may differ

PHOTOELECTRIC SENSORS

WT34-B410

ORDERING INFORMATION

Type	part no.
WT34-B410	1019229

Further device versions and accessories at www.sick.com/W34

DETAILED TECHNICAL DATA

FEATURES

Functional principle	Photoelectric proximity sensor
Functional principle detail	Background suppression
Dimensions (W x H x D)	27 mm x 92 mm x 70 mm
Housing design (light emission)	Rectangular
Sensing range max.	100 mm ... 2,500 mm [1]
Sensing range	100 mm ... 2,500 mm
Type of light	Infrared light
Light source	LED [2]
Light spot size (distance)	Ø 80 mm (2,500 mm)
Adjustment	Potentiometer

[1] Object with 90% remission (based on standard white, DIN 5033).

[2] Average service life: 100,000 h at T_U = +25 °C.

MECHANICS/ELECTRONICS

Supply voltage U_B	10 V DC ... 30 V DC [1]

[1] Limit values.

[2] May not fall below or exceed U_V tolerances.

[3] Signal transit time with resistive load.

[4] With light/dark ratio 1:1.

[5] A = V_S connections reverse-polarity protected.

[6] C = interference suppression.

[7] D = outputs overcurrent and short-circuit protected.

[8] Reference voltage: 50 V DC.

Ripple	< 5 V_{pp} [2]
Current consumption	50 mA
Switching output	NPN, PNP
Switching mode	Light switching, Dark switching
Switching mode selector	Selectable via PNP/NPN selector, selectable via light/dark selector
Output current $I_{max.}$	≤ 100 mA
Response time	≤ 500 µs [3]
Switching frequency	1,000 Hz [4]
Connection type	Male connector M12, 4-pin
Circuit protection	A [5] C [6] D [7]
Protection class	II [8]
Weight	140 g
Housing material	Plastic, ABS
Enclosure rating	IP67
Test input sender off	TE to 0 V
Ambient operating temperature	–40 °C ... +60 °C
Ambient temperature, storage	–40 °C ... +75 °C
UL File No.	NRKH.E181493 & NRKH7.E181493

[1] Limit values.

[2] May not fall below or exceed U_v tolerances.

[3] Signal transit time with resistive load.

[4] With light/dark ratio 1:1.

[5] A = V_s connections reverse-polarity protected.

[6] C = interference suppression.

[7] D = outputs overcurrent and short-circuit protected.

[8] Reference voltage: 50 V DC.

SAFETY-RELATED PARAMETERS

$MTTF_D$	790 years
DC_{avg}	0 %

CERTIFICATES

EU declaration of conformity	✓
UK declaration of conformity	✓
ACMA declaration of conformity	✓
Moroccan declaration of conformity	✓
China RoHS	✓
China Compulsory Product Certification (CCC) exempt	✓
cULus certificate	✓
Photobiological safety (DIN EN 62471) certificate	✓

ADJUSTMENTS

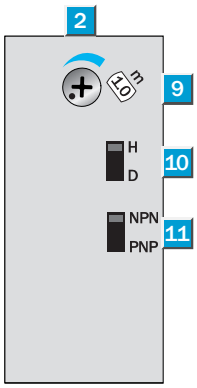

② Receive indicator
⑨ Adjustment of sensing range
⑩ Light/dark selector
⑪ NPN/PNP changeover switch

CONNECTION TYPE

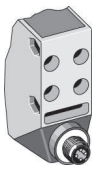

CONNECTION DIAGRAM CD-117

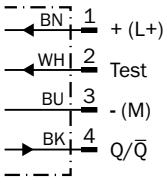

CHARACTERISTIC CURVE

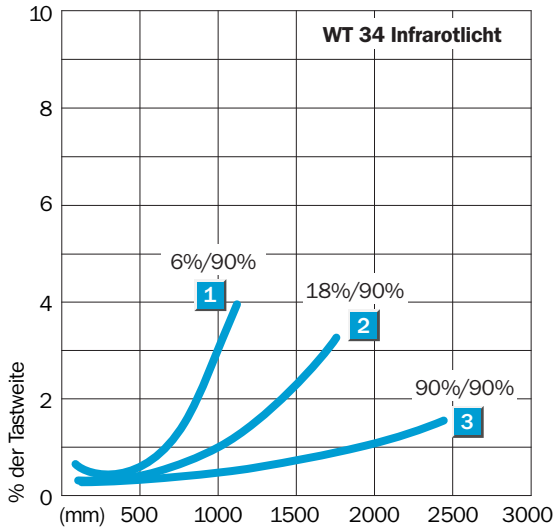

SENSING RANGE DIAGRAM

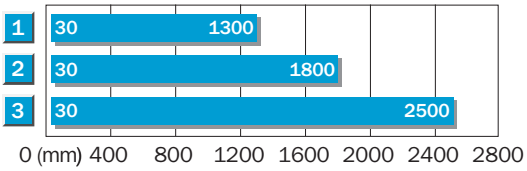

1	Scanning distance on black [9]
2	Scanning distance on grey [9]
3	Scanning distance on white [9]

DIMENSIONAL DRAWING

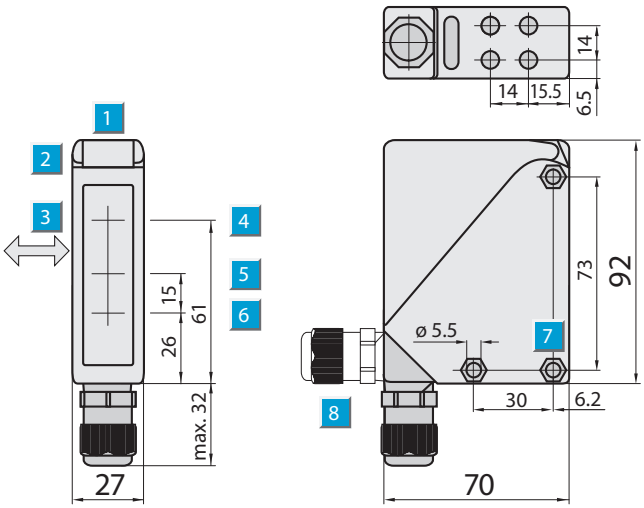

Dimensions in mm (inch)
① Alignment sight
② LED signal strength indicator
③ Standard direction of the material being detected
④ Center of optical axis, sender
⑤ Center of optical axis, receiver (close range)
⑥ Center of optical axis, receiver (far range)
⑦ Mounting hole ø 5.5 mm, for M5 hexagon nuts on both sides

Further information as well as suitable accessories, example applications and downloads such as CAD dimensional models, operating instructions and software can be found at www.sick.com/1019229

SICK AG
WALDKIRCH
GERMANY
SICK.COM

SICK AT A GLANCE

SICK is a leading global technology company for intelligent sensors and integrated solutions in industrial automation. Our technologies set benchmarks, making your industrial processes more efficient, safer and more sustainable – both in logistics and manufacturing operations.

SICK combines sensor intelligence with industry expertise and certified consulting services. We provide the ideal foundation for scalable as well as tailor-made automation solutions and create added value along the entire value chain. Our close partnerships with our customers are more than just a promise: Together, we optimize productivity, improve quality, protect health and safety, and help build a sustainable future. All with empathy and trust.

Since 1946, we have been developing innovative technologies with passion and a pioneering spirit. With a global network in around 40 countries, SICK has a global presence and is always close by. The company's headquarters are located in Waldkirch near Freiburg, Germany. Our customers benefit from our understanding of both local and global requirements, which enables us to deliver tailor-made solutions

SICK
Sensor Intelligence