SICK.COM

DATA SHEET

V2D632R-MWMFB4

Lector63x
Image-based code readers

SICK Sensor Intelligence

Illustration may differ

IMAGE-BASED CODE READERS

V2D632R-MWMFB4

ORDERING INFORMATION

Type	part no.
V2D632R-MWMFB4	1074081

Further device versions and accessories at www.sick.com/Lector63x

DETAILED TECHNICAL DATA

FEATURES

Variant	Complete device
Optical focus	Adjustable focus (manual)
Sensor	CMOS monochrome
Sensor resolution	1,600 px x 1,200 px (1.9 MP)
Illumination	Integrated
Illumination color	White, LED, Visible,
Feedback spot	LED, Visible, green, 525 nm, ± 15 nm LED, Visible, Red, 630 nm, ± 20 nm
Alignment aid	Laser, Red, 630 nm ... 680 nm
Laser class	1, Complies with 21 CFR 1040.10 and 1040.11 except for conformance with IEC 60825-1 Ed.3., as described in “Laser Notice No. 56” dated May 8, 2019 (IEC 60825-1:2014, EN 60825-1:2014+A11:2021)
Lens	C-mount (compact)
Optical format	1/1.8"
Focal length	25 mm
Aperture	8
Scanning frequency	≤ 50 Hz, at 1.9 megapixels resolution
Code resolution	≥ 0.1 mm [1]
Working range	50 mm ... 2,200 mm [2] [3]

[1] Depends on lens used, for details see field of view diagram.

[2] Depends on lens used.

[3] For details see field of view diagram.

MECHANICS/ELECTRONICS

Connection type	1 x M12, 17-pin plug (serial, CAN, I/Os, power supply) 1 x M12, 8-pin socket (Ethernet, 1 GBit/s) 1 x M8, 4-pin socket (USB) 1 x M12, 4-pin socket (external illumination control)
Supply voltage	12 V DC ... 24 V DC, ± 20 %

Power consumption	Typ. 10 W, ± 20 %
Output current	≤ 100 mA
Housing material	Aluminum die cast
Window material	Plastic
Enclosure rating	IP67 (EN 60529 (1991-10), EN 60529/A2 (2002-02))
Electrical safety	EN 60950-1 (2011-01)
Weight	590 g
Dimensions (L x W x H)	108 mm x 63.1 mm x 74.1 mm

PERFORMANCE

Readable code structures	1D codes, Stacked, 2D codes
Bar code types	GS1-128 / EAN 128, UPC / GTIN / EAN, Interleaved 2 of 5, Pharmacode, GS1 DataBar, Code 39, Code 128, Codabar, Code 32, Code 93, USPS (Postnet, Planet, USPS4SCB), Australian Post, Dutch KIX Post, Royal Mail, Swedish Post
2D code types	Data Matrix ECC200, GS1 Data-Matrix, MaxiCode, QR code
Stacked code types	PDF417
Code qualification	On the basis of ISO/IEC 16022, ISO/IEC 15415, ISO/IEC 18004

INTERFACES

Ethernet	✔ , TCP/IP
Function	Data interface (read result output), Service interface, FTP (image transmission)
Data transmission rate	10/100/1,000 Mbit/s
PROFINET	✓
Function	PROFINET Single Port (integrated), PROFINET Dual Port (optional via external connection module CDF600-2)
Data transmission rate	10/100 MBit/s
EtherNet/IP™	✓
Data transmission rate	10/100/1,000 Mbit/s
Serial	✔ , RS-232, RS-422
Function	Data interface (read result output), Service interface
Data transmission rate	0.3 kBaud ... 115.2 kBaud, AUX: 57.6 kBaud (RS-232)
CAN	✓
Function	SICK CAN sensor network CSN (CAN controller/CAN device, multiplexer/server)
Data transmission rate	250 kbit/s ... 500 kbit/s
PROFIBUS DP	✓
Type of fieldbus integration	Optional over external fieldbus module CDF600-2
Digital inputs	4 (“Sensor 1”, “Sensor 2”, 2 inputs via optional CMC600 parameter memory in CDB650/CDM420)
Configurable inputs	Encoder input, external trigger
Digital outputs	6 (CDB650: “Result 1”, “Result 2”, “Result 3”, “Result 4”, 2 external outputs via CMC600 or CDM420: “Result 1”, “Result 2”, 2 external outputs via CMC600 or cable with open end: “Result 1”, “Result 2”, “Result 3”, “Result 4”)
Configurable outputs	Good read, External illumination control, free configurable output condition, "device ready"
Reading pulse	Digital inputs, non-powered, serial interface, Ethernet, CAN, auto pulse, presentation mode
Optical indicators	11 LEDs (5 status displays, 16 LEDs, 5 LED bar graphs, 1 green/red feedback spot)
Acoustic indicators	Beeper (configurable)
Control elements	2 buttons (choose and start/stop functions)
Operator interfaces	Web server
Configuration software	SOPAS ET
Memory card	Micro SD memory card (flash card) max. 32 GB, optional
Data storage and retrieval	Image and data storage via microSD memory card and external FTP
EncoderFrequency	Max. 1 kHz
External illumination control	Via digital output (max. 24 V trigger) or external illumination connection

AMBIENT DATA

Electromagnetic compatibility (EMC)	EN 61000-6-2:2005-08 / EN 61000-6-4 (2007-01) + A1 (2011)
Vibration resistance	EN 60068-2-6:2008-02
Shock resistance	EN 60068-2-27:2009-05
Ambient operating temperature	0 °C ... +50 °C
Storage temperature	–20 °C ... +70 °C
Relative humidity	90 %, Non-condensing

CERTIFICATES

EU declaration of conformity	✓
UK declaration of conformity	✓
ACMA declaration of conformity	✓
China RoHS	✓
cULus certificate	✓
Profinet certificate	✓
Information according to Art. 3 of Data Act (Regulation EU 2023/2854)	✓

DIMENSIONAL DRAWING

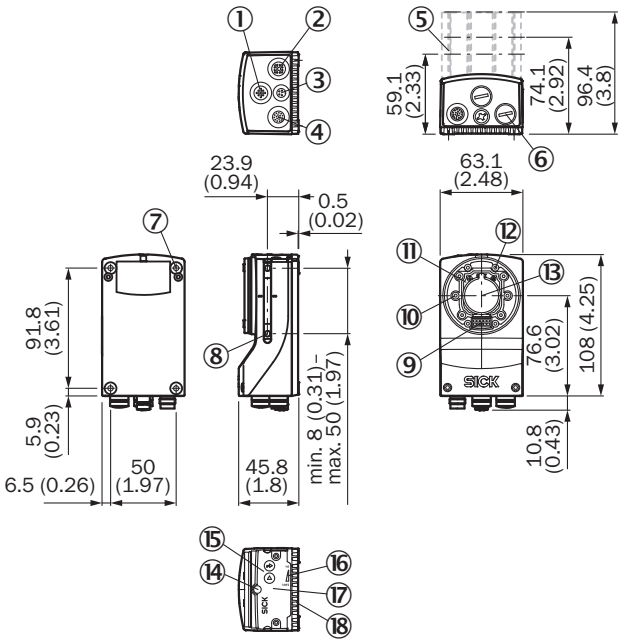

Dimensions in mm (inch)
① “External light” connection (external illumination unit, female connector, M12, 4-pin, A-coded)
② “Ethernet” connection (Gigabit Ethernet, female connector, M12, 8-pin, X-coded)
③ “USB” connection (female connector, type M8, 4-pin), for temporary use as a service interface only
④ “Power/Serial Data/CAN/I/O” connection (male connector, M12, 17-pin, A-coded)
⑤ Optics protection hood (length: 22.7 mm, 37.7 mm or 60 mm)
⑥ 4 protective caps for sealing off the electrical connections as required for enclosure rating IP67 (delivery condition)
⑦ 4 tapped blind holes, M5, 5.5 mm deep for mounting the product
⑧ 2 M5 sliding nuts; 5.5 mm deep; pivoting; as an alternative method of mounting the product
⑨ Connection for an integrable illumination unit (VI55I ring illumination unit)
⑩ 2 laser alignment aids
⑪ S-mount or C-mount optics module
⑫ 4 blind tapped holes, 2.5 mm for mounting the spacers for the integrable illumination (VI55I ring illumination unit)
⑬ Optical axis and center of the image sensor
⑭ Basic device: Manual focus screw for an S-mount lens, accessible via the round opening in the housing cover. To secure the focus setting, cover the round opening with a self-adhesive label. Complete device: The opening is already covered by a label.
⑮ 2 function keys
⑯ 5 bar graph LEDs
⑰ Hinged cover on the top side of the device, access to the microSD memory card and the manual focus screw (S-mount)
⑱ 5 status LEDs (2 levels)

FIELD OF VIEW

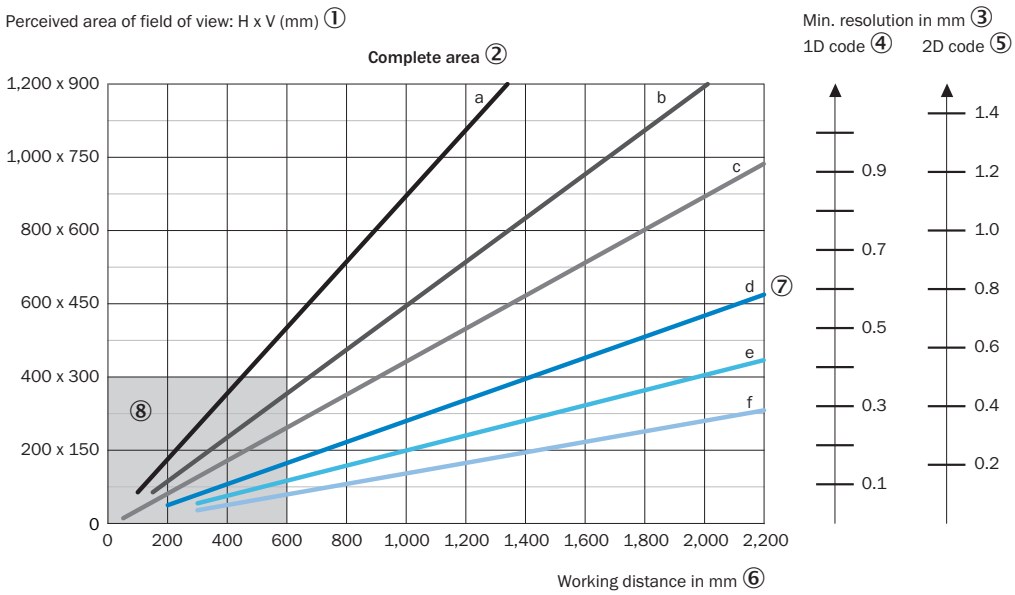

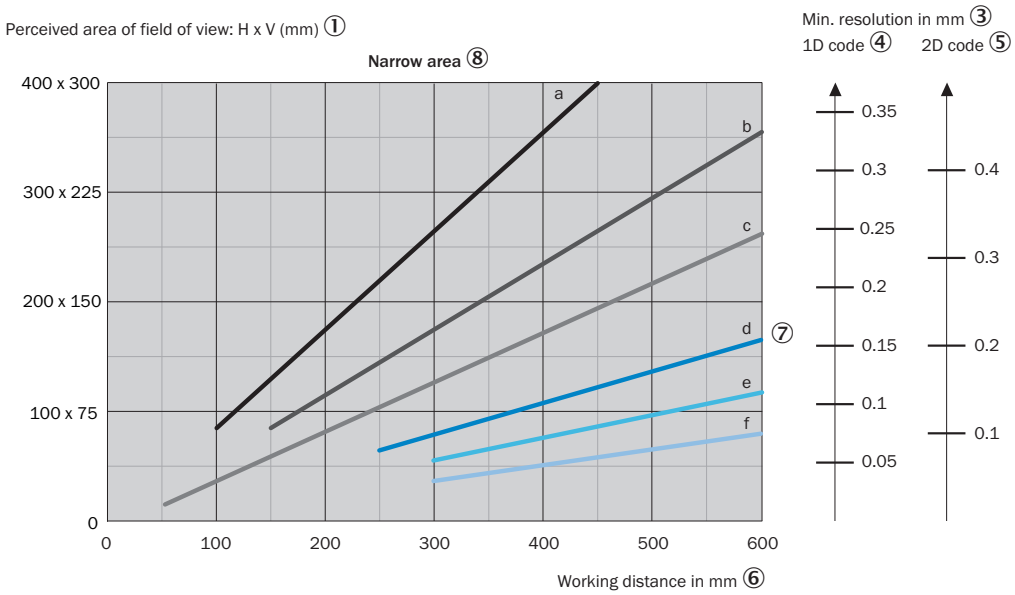

a: f = 8.0 mm (C-mount standard only) ⑨
b: f = 12.0 mm
c: f = 16.0 mm
d: f = 25.0 mm
e: f = 35.0 mm
f: f = 50.0 mm

For S-mount and standard C-mount lenses, spacer rings are needed for working distances shorter than approximately 10 times the focal length. For compact C-mount lenses, spacer rings are not needed, but the built-in illumination cannot be used for distances shorter than 300 mm.

① perceived field of view area: horizontal x vertical (mm)
② complete area
③ Minimum resolution in mm
④ 1D code
⑤ 2D code
⑥ Working distance in mm
⑦ Focal length of lens, here example for f = 25.0 mm
⑧ Close range
⑨ Standard C-mount only

SELECTION GUIDE

Body, incl. C-mount module | C-mount lens | Mounting bracket | External illumination | Lens protective hood | Assembled device, incl. all ICL parts

Lector631
V2D631R-MXCXB0
1078473

Lector632
V2D632R-MXCXB0
1075881

Lector631
V2D631D-MXCXB0
1082394

Lector632
V2D632D-MXCXB0
1082396

Focal length **8 mm**
Aperture **F1.4–16**
5325091

Focal length **12 mm**
Aperture **F1.4–16**
5325403

An external, application-specific illumination is required

Medium – 37.7mm
2079127

Long – 60 mm
2079204

Focal length **16 mm**
Aperture **F1.4–16**
5325404

Bracket for ICL mounting
2081187

ICL280, **red**
1052472

ICL280, **infrared**
1057645

Focal length **25 mm**
Aperture **F1.4–16**
5325405

Bracket for ICL mounting
2081187

ICL260, **red**
1052495

ICL280, **infrared**
1057645

Focal length **35 mm**
Aperture **F1.4–16**
5325406

Bracket for ICL mounting
2081187

ICL300, **red**
1046820

ICL300, **infrared**
1047957

Focal length **50 mm**
Aperture **F1.4–16**
5325407

Bracket for ICL mounting
2081187

ICL300, **red**
1046820

ICL300, **infrared**
1047957

Hood to be used with ICL illumination
2081544

SELECTION GUIDE LECTOR63X COMPACT C-MOUNT

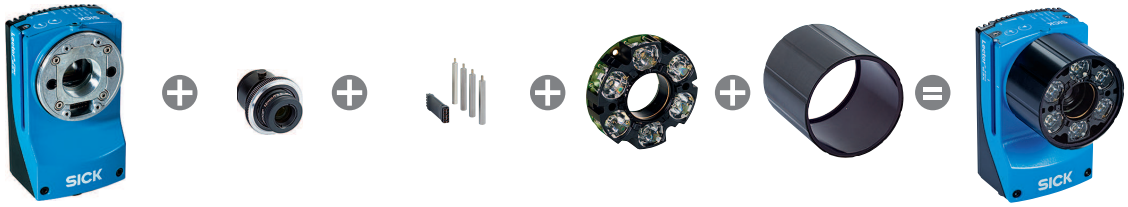

Body, incl. C-mount module	Compact C-mount lens	Spacer screws and illumination connector	Integratable illumination	Lens protective hood	Assembled device, incl. all mentioned parts
Lector631 V2D631R-MXCXB0 1078473	Focal length **12 mm** Aperture **F8** 2079348	**Medium – 15 mm** 2079501	**Medium, white** 2078430	**Medium – 37.7 mm** 2079127	**Lector631, 12 mm, F8, white** V2D631R-MKMDB4 1080075
					Lector632, 12 mm, F8, white V2D632R-MKMDB4 1074079
			Medium, red 2098650	**Medium – 37.7 mm** 2079127	
			Medium, blue 2083814	**Medium – 37.7 mm** 2079127	
			Wide, IR 2101371	**Medium – 37.7 mm** 2092590	
Lector632 V2D632R-MXCXB0 1075881	Focal length **16 mm** Aperture **F8** 2079346	**Long – 37 mm** 2079502	**Medium, white** 2078430	**Long – 60 mm** 2079204	**Lector631, 16 mm, F8, white** V2D631R-MKMEB1 1080076
					Lector632, 16 mm, F8, white V2D632R-MKMEB1 1074080
			Medium, red 2098650	**Long – 60 mm** 2079204	
			Medium, blue 2083814	**Long – 60 mm** 2079204	
			Medium, IR 2098834	**Long – 60 mm** 2092592	
Lector631 V2D631D-MXCXB0 1082394	Focal length **25 mm** Aperture **F8** 2079343	**Medium – 15 mm** 2079501	**Narrow, white** 2078431	**Medium – 37.7 mm** 2079127	**Lector631, 25 mm, F8, white** V2D631R-MWMFB4 1080077
					Lector632, 25 mm, F8, white V2D632R-MWMFB4 1074081
			Narrow, red 2084247	**Medium – 37.7 mm** 2079127	
			Narrow, blue 2083812	**Medium – 37.7 mm** 2079127	
Lector632 V2D632D-MXCXB0 1082396	Focal length **35 mm** Aperture **F8** 2079344	**Long – 37 mm** 2079502	**Narrow, white** 2078431	**Long – 60 mm** 2079204	**Lector631, 35 mm, F8, white** V2D631R-MWMGB1 1080078
					Lector632, 35 mm, F8, white V2D632R-MWMGB1 1074082
			Narrow, red 2084247	**Long – 60 mm** 2079204	
			Narrow, blue 2083812	**Long – 60 mm** 2079204	

EXPLODED VIEW

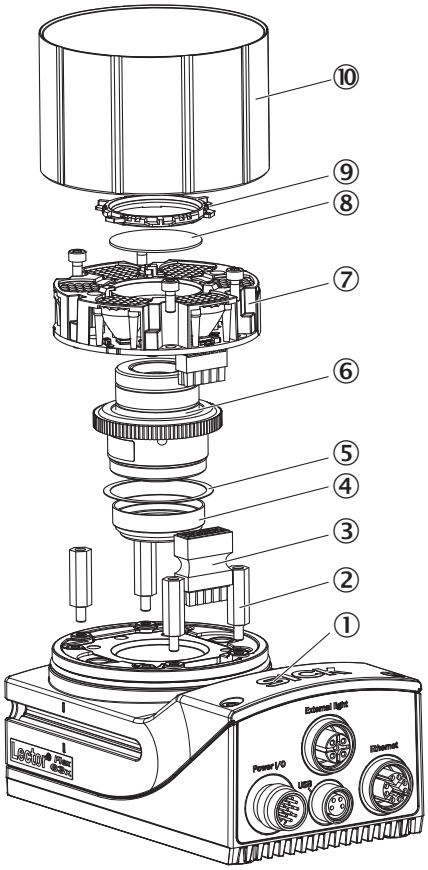

① Camera housing
② Spacer for built-in illumination
③ Plug connector for illumination
④ Optical filter (optional)
⑤ Spacer disk (included with delivery of filter)
⑥ Compact C-mount lens
⑦ Built-in illumination
⑧ C-mount filter (optional), cannot be used with 15 mm lenses (2080213)
⑨ Filter holder
⑩ optics protection hood

EXPLODED VIEW

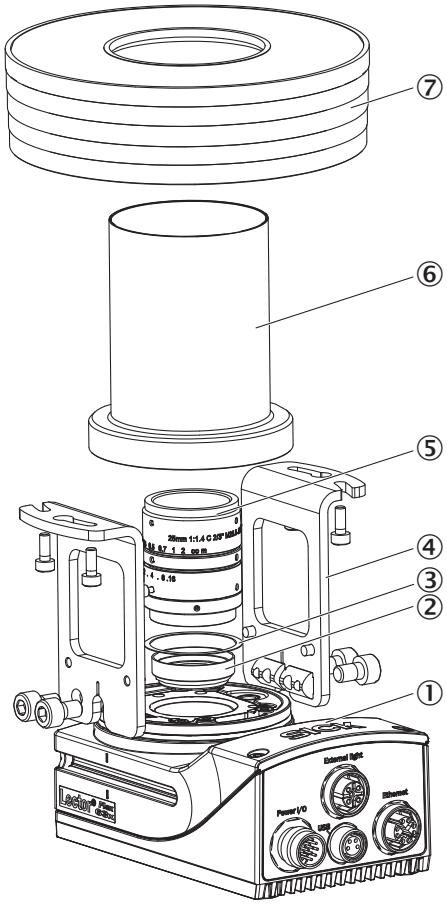

① Camera housing
② C-mount filter (optional)
③ Spacer disk (included with delivery of filter)
④ C-mount lens
⑤ Mounting bracket for ICL ring lighting
⑥ optics protection hood for ICL ring lighting
⑦ ICL ring lighting

Further information as well as suitable accessories, example applications and downloads such as CAD dimensional models, operating instructions and software can be found at www.sick.com/1074081

SICK AG
WALDKIRCH
GERMANY
SICK.COM

SICK AT A GLANCE

SICK is a leading global technology company for intelligent sensors and integrated solutions in industrial automation. Our technologies set benchmarks, making your industrial processes more efficient, safer and more sustainable – both in logistics and manufacturing operations.

SICK combines sensor intelligence with industry expertise and certified consulting services. We provide the ideal foundation for scalable as well as tailor-made automation solutions and create added value along the entire value chain. Our close partnerships with our customers are more than just a promise: Together, we optimize productivity, improve quality, protect health and safety, and help build a sustainable future. All with empathy and trust.

Since 1946, we have been developing innovative technologies with passion and a pioneering spirit. With a global network in around 40 countries, SICK has a global presence and is always close by. The company's headquarters are located in Waldkirch near Freiburg, Germany. Our customers benefit from our understanding of both local and global requirements, which enables us to deliver tailor-made solutions

SICK
Sensor Intelligence