SICK.COM

DATA SHEET

S30B-2011DA

S300
Safety laser scanners

SICK Sensor Intelligence

Illustration may differ

SAFETY LASER SCANNERS

S30B-2011DA

ORDERING INFORMATION

Type	part no.
S30B-2011DA	1026822

Further device versions and accessories at www.sick.com/S300

DETAILED TECHNICAL DATA

FEATURES

Product version	S300 Professional
Model	Sensor without system plug
Application	Indoor
Protective field range	2 m
Warning field range	8 m (at 15 % reflectivity)
Distance measuring range	30 m
Type of field set	Triple field sets
Number of field sets	8
Number of fields	24
Number of monitoring cases	32 [1]
Scanning angle	270°
Resolution (can be configured)	30 mm, 40 mm, 50 mm, 70 mm
Angular resolution	0.5°
Response time	80 ms [2]
Protective field supplement	100 mm
Number of multiple samplings	2 ... 16, configurable
Delay of automatic reset	2 s ... 60 s, configurable

[1] In combination with an additional static input via EFI or using the dynamic inputs on the device. Otherwise eight.

[2] Depending on basic response time and multiple sampling.

SAFETY-RELATED PARAMETERS

Type	Type 3 (IEC 61496)
Safety integrity level	SIL 2 (IEC 61508)
Category	Category 3 (EN ISO 13849)
Performance level	PL d (EN ISO 13849)

PFH_D (mean probability of a dangerous failure per hour)	8.0×10^{-8}
T_M (mission time)	20 years (EN ISO 13849)
Safe state in the event of a fault	At least one OSSD is in the OFF state.

FUNCTIONS

Restart interlock	✓
External device monitoring (EDM)	✓
Multiple sampling	✓
Monitoring case switching	✓
Static protective field switching	✓
Dynamic protective field switching	✓
Contour as a reference	✓
Integrated configuration memory	✓
Measured data output	Via RS-422
Safe SICK device communication via EFI	✓

INTERFACES

Connection type	System plug with or without connecting cable
Universal I/Os	5 [1]
Inputs	
External device monitoring (EDM)	1 [2]
Reset/restart	1 [2]
Static control inputs	3 [3]
Static control inputs with EFI	5 [4]
Dynamic control inputs (incremental encoder)	2 [5]
Standby	1
Outputs	
OSSD pairs	1
Application diagnostic outputs	3 [6]
Configuration method	PC with CDS (Configuration and Diagnostic Software)
Configuration and diagnostics interface	RS-232
Transmission rate	38.4 kBaud
Data interface	RS-422
Transmission rate	≤ 500 kBaud
Safe SICK device communication via EFI	
Transmission rate	≤ 500 kBaud
Length of cable	≤ 50 m
Conductor cross section	0.22 mm²

[1] Freely programmable, e.g., external device monitoring input, reset input, contamination warning, reset required.

[2] Availability depends on the configuration of the universal I/Os.

[3] 2+1; additional input is only available if reset and reset required are not being used.

[4] In combination with an EFI device (Flexi Soft or EFI gateway) five static control inputs are available. Otherwise three.

[5] Two of the static swichting signals can be used either as dynamic or as static switching signals.

[6] Freely programmable, e.g. warning field, contamination, reset required.

ELECTRONICS

Protection class	II (EN 50178, EN 60950)
Supply voltage V_s	24 V DC (16.8 V DC ... 30 V DC)
Power consumption	0.33 A [1] 1.7 A [2]
Outputs Output signal switching devices (OSSDs) Application diagnostic outputs	 2 x 250 mA 3 x 100 mA [3]

[1] At 24 V DC without output load.

[2] At 24 V DC including maximum output load.

[3] Freely programmable, e.g. warning field, contamination, reset required.

MECHANICS

Dimensions (W x H x D)	102 mm x 152 mm x 106 mm
Weight	1.2 kg
Housing material	Aluminum die cast
Housing color	RAL 1021 (yellow)
Optics cover material	Polycarbonate
Optics cover surface finish	Outside with scratch-resistant coating

AMBIENT DATA

Enclosure rating	IP65 (EN 60529)
Ambient operating temperature	–10 °C ... +50 °C
Storage temperature	–25 °C ... +50 °C
Vibration resistance Class	IEC 60068-2-6, IEC 60068-2-64, IEC 60721-3-5, IEC TR 60721-4-5, IEC 61496-3 5M1 (IEC 60721-3-5)
Shock resistance Class Continuous shock	IEC 60068-2-27, IEC 60721-3-5, IEC TR 60721-4-5, IEC 61496-3 5M1 (IEC 60721-3-5) 50 m/s², 11 ms 100 m/s², 16 ms

OTHER INFORMATION

Type of light	Pulsed laser diode
Wave length	905 nm
Detectable remission factor	1.8 % ... > 1,000 %, reflectors
Laser class	1 (21 CFR 1040.10 and 1040.11, IEC 60825-1)

CERTIFICATES

EU declaration of conformity	✓
UK declaration of conformity	✓
ACMA declaration of conformity	✓
China RoHS	✓
cULus certificate	✓
EC-Type-Examination approval	✓
Information according to Art. 3 of Data Act (Regulation EU 2023/2854)	✓

DIMENSIONAL DRAWING SCAN PLANE ORIGIN

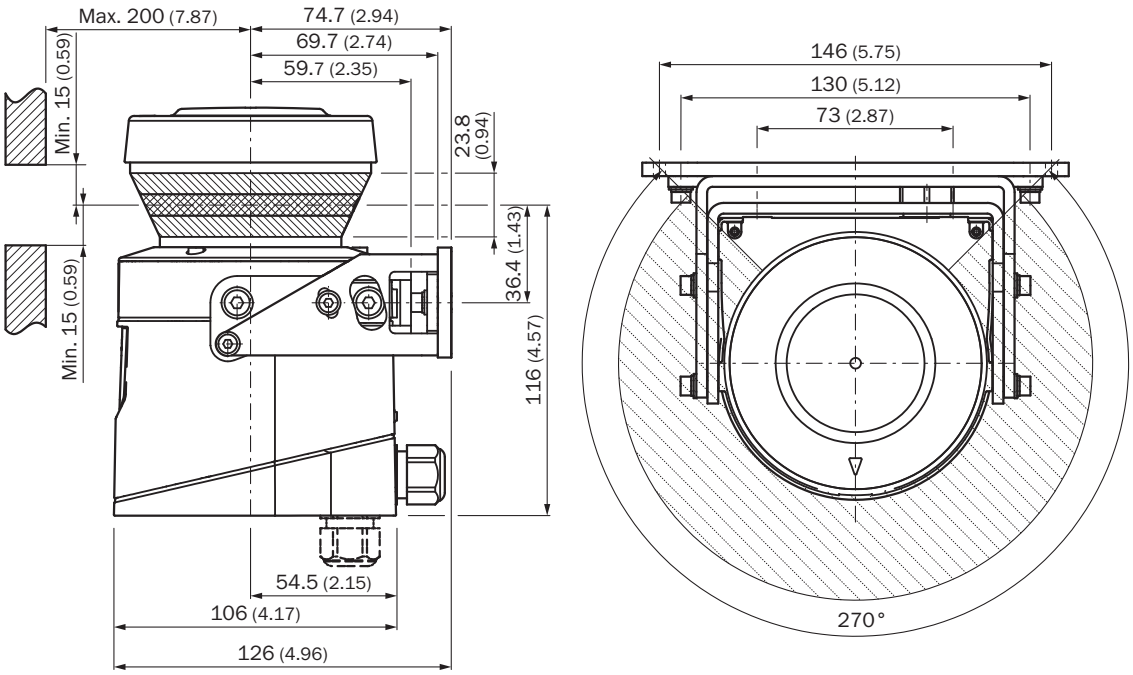

Dimensions in mm (inch)

DIMENSIONAL DRAWING LASER SCANNER

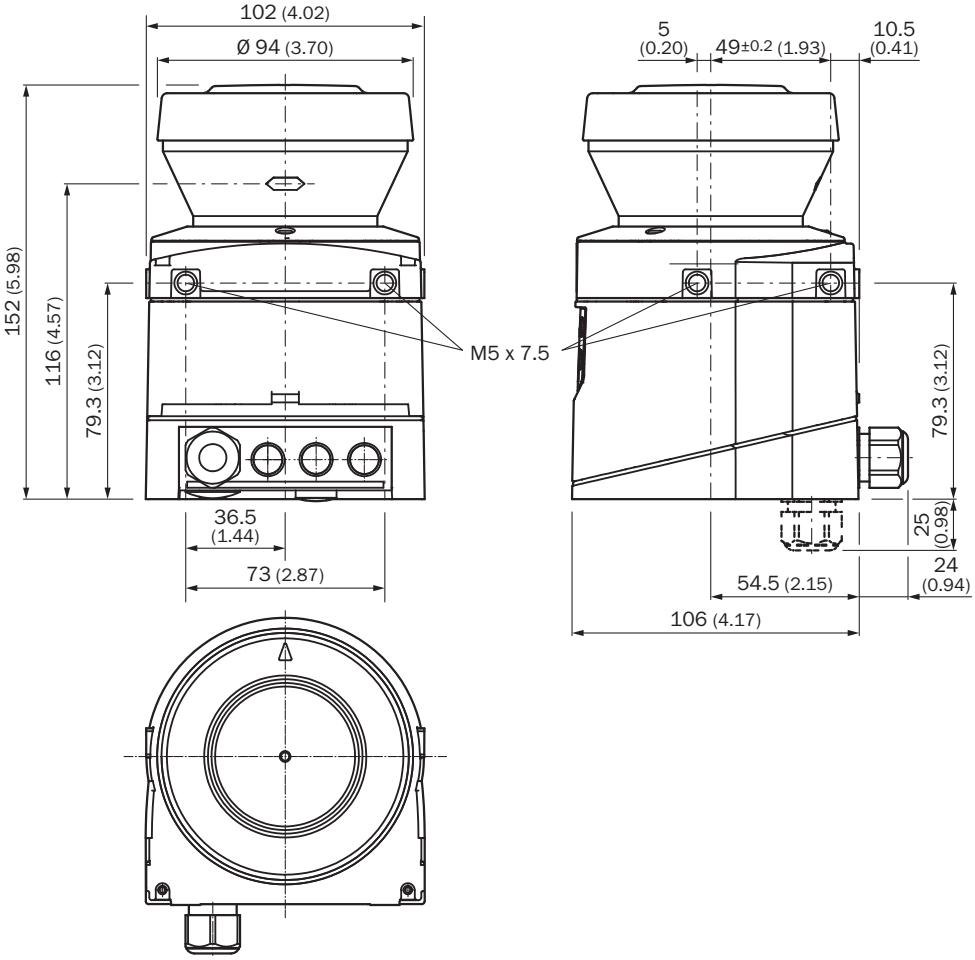

Dimensions in mm (inch)

CONNECTION DIAGRAM S300 PROFESSIONAL: PROTECTIVE FIELD SWITCHING WITH TWO STATIC INPUTS

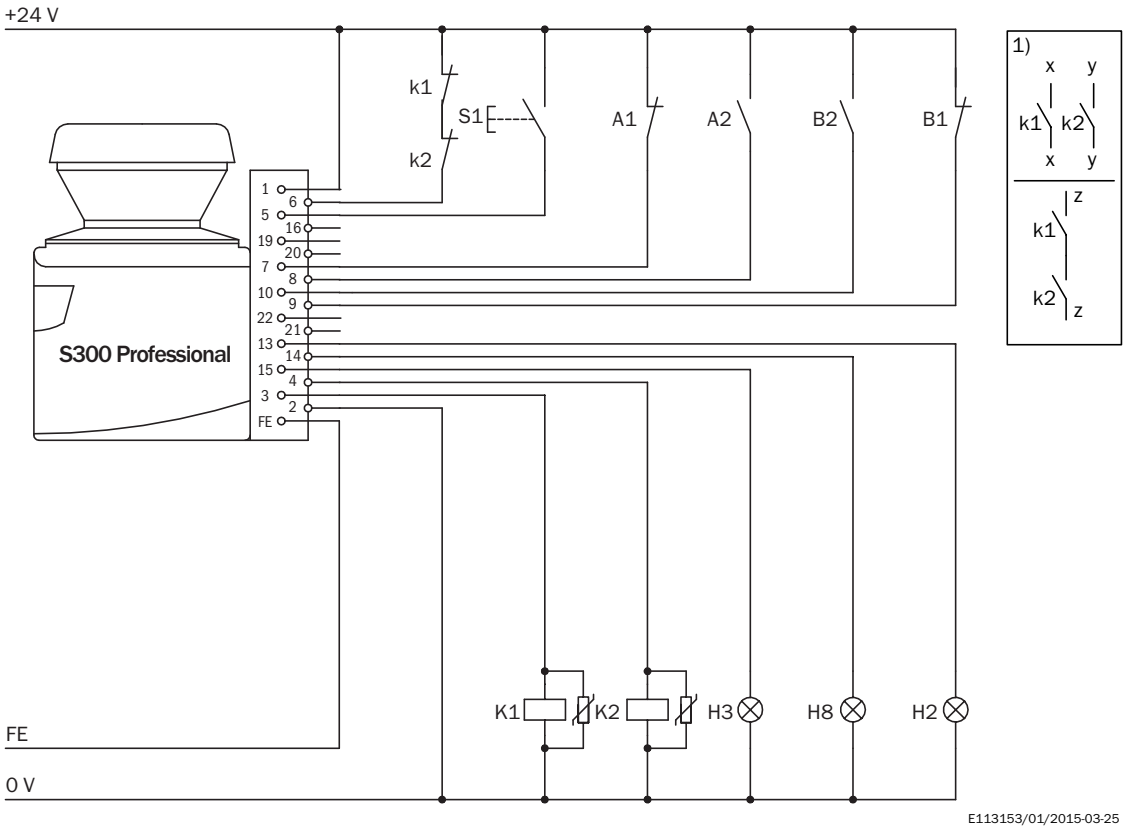

- S300 Professional in connection with relays/contactors
- Operating mode: With restart interlock and external device monitoring
- Protective field switching with control inputs IN A and IN B

Comments

[1] Output circuits: These contacts must be incorporated into the control such that the dangerous state is brought to an end if the output circuit is open. For categories 4 and 3, they must be incorporated on two channels (x, y paths). Single-channel incorporation into the control (z path) is only possible with a single-channel control and taking the risk analysis into account.

CONNECTION DIAGRAM PROTECTIVE FIELD SWITCHING BETWEEN TWO S300 WITH STATIC AND DYNAMIC INPUTS

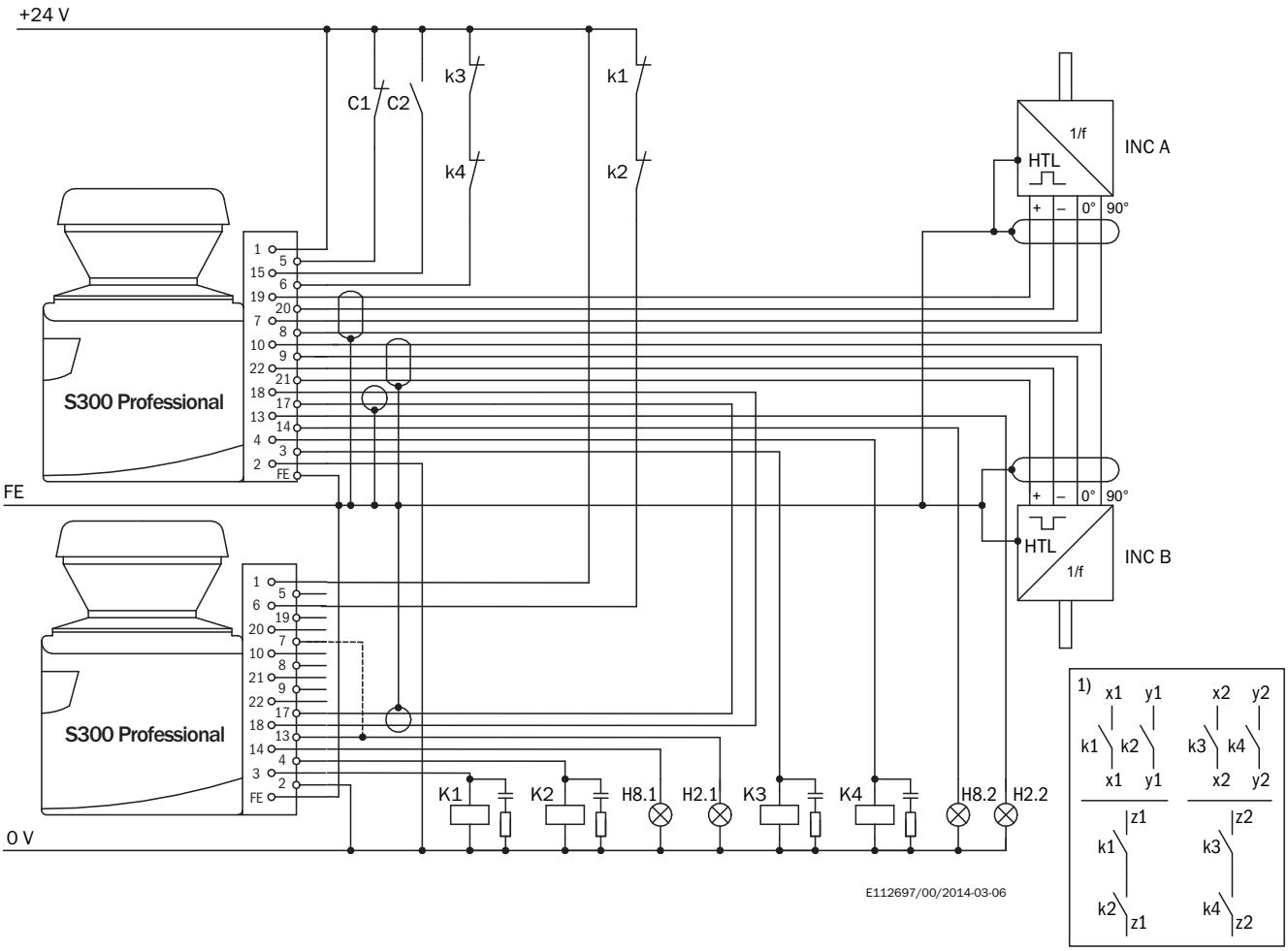

- S300 Professional with S300 Professional in host/guest connection with relays/contactors
- Operating mode: with restart interlock and external device monitoring
- Dynamic protective field switching by the incremental encoders A and B on the host
- Static protective field switching using the control input IN C on the host
- The protective fields affect the related OSSDs on host or guest

Comments

1) Output circuits: These contacts are to be connected to the controller such that, with the output circuit open, the dangerous state is disabled. For categories 4 and 3, the integration must be dual-channel (x/y paths). Single-channel integration in the control (z path) is only possible with a single-channel control and taking the risk analysis into account.

Further information as well as suitable accessories, example applications and downloads such as CAD dimensional models, operating instructions and software can be found at www.sick.com/1026822

SICK AG
WALDKIRCH
GERMANY
SICK.COM

SICK AT A GLANCE

SICK is a leading global technology company for intelligent sensors and integrated solutions in industrial automation. Our technologies set benchmarks, making your industrial processes more efficient, safer and more sustainable – both in logistics and manufacturing operations.

SICK combines sensor intelligence with industry expertise and certified consulting services. We provide the ideal foundation for scalable as well as tailor-made automation solutions and create added value along the entire value chain. Our close partnerships with our customers are more than just a promise: Together, we optimize productivity, improve quality, protect health and safety, and help build a sustainable future. All with empathy and trust.

Since 1946, we have been developing innovative technologies with passion and a pioneering spirit. With a global network in around 40 countries, SICK has a global presence and is always close by. The company's headquarters are located in Waldkirch near Freiburg, Germany. Our customers benefit from our understanding of both local and global requirements, which enables us to deliver tailor-made solutions

SICK
Sensor Intelligence