SICK.COM

DATA SHEET

MICS3-ABAZ55IZ1P01

microScan3
Safety laser scanners

SICK Sensor Intelligence

Illustration may differ

SAFETY LASER SCANNERS

MICS3-ABAZ55IZ1P01

ORDERING INFORMATION

Type	part no.
MICS3-ABAZ55IZ1P01	1082016

Further device versions and accessories at www.sick.com/microScan3

DETAILED TECHNICAL DATA

FEATURES

Product version	microScan3 Core - EtherNet/IP
Model	Sensor (1075848) including system plug (2086102), pre-mounted on the underside
Application	Indoor
Protective field range	5.5 m
Warning field range	40 m
Number of simultaneously monitored fields	≤ 4 [1]
Number of fields	8
Number of monitoring cases	8
Scanning angle	275°
Resolution (can be configured)	30 mm 40 mm 50 mm 70 mm 150 mm 200 mm
Angular resolution	0.39°
Response time	95 ms
Protective field supplement	65 mm

[1] Protection, warning or contour detection fields.

SAFETY-RELATED PARAMETERS

Type	Type 3 (IEC 61496)
Safety integrity level	SIL 2 (IEC 61508)
Category	Category 3 (EN ISO 13849)
Performance level	PL d (EN ISO 13849)
PFH_D (mean probability of a dangerous failure per hour)	8.0×10^{-8}

T_M (mission time)	20 years (EN ISO 13849)
Safe state in the event of a fault	The safety outputs via the network are logic 0.

FUNCTIONS

Restart interlock	✓
Multiple sampling	✓
Monitoring case switching	✓
Simultaneous monitoring	✓
Static protective field switching	✓
Safe contour detection	✓
Contour as a reference	✓
Integrated configuration memory	✓
Measured data output	Via Ethernet

INTERFACES

Connection type	
Voltage supply	1 x male connector, M12, 4-pin, A-coded
Fieldbus, industrial network	2 x M12 female connectors, 4-pin, D-coded
Outputs	
OSSD pairs	0
Safety outputs via network	4
Configuration method	PC with Safety Designer (Configuration and Diagnostic Software)
Configuration and diagnostics interface	USB 2.0, Mini-USB, Ethernet
Data interface	
Services	EtherNet/IP™ CIP Safety™ CoLa 2 (configuration and diagnostics using Safety Designer) Data output DHCP SNMP SNTP (client and server)
Fieldbus, industrial network	EtherNet/IP™
Supported protocol versions	Common Industrial Protocol: The CIP Networks Library Volume 1, Edition 3.20 EtherNet/IP™: The CIP Networks Library Volume 2, Edition 1.21 CIP Safety™: The CIP Networks Library Volume 5, Edition 2.13
Topology support	DLR (Device Level Ring)
Display elements	Graphic color display, LEDs

ELECTRONICS

Protection class	III (EN 61140)
Supply voltage V_s	24 V DC (16.8 V DC ... 30 V DC)
Power consumption typical	7.2 W

MECHANICS

Dimensions (W x H x D)	112 mm x 150.7 mm x 111.1 mm (without system plug)
Weight	1.45 kg
Housing material	Aluminum
Housing color	RAL 1021 (yellow), RAL 9005 (black)
Optics cover material	Polycarbonate
Optics cover surface finish	Outside with scratch-resistant coating

AMBIENT DATA

Enclosure rating	IP65 (IEC 60529)
Ambient light immunity	≤ 40 klx (IEC 61496-3) [1]
Ambient operating temperature	–10 °C ... +50 °C
Storage temperature	–25 °C ... +70 °C
Vibration resistance Class	IEC 60068-2-6, IEC 60068-2-64, IEC 60721-3-5, IEC TR 60721-4-3, IEC 61496-1, IEC 61496-3 5M1 (IEC 60721-3-5) 3M4 (IEC TR 60721-4-3)
Shock resistance Class Continuous shock	IEC 60068-2-27, IEC 60721-3-5, IEC TR 60721-4-3, IEC 61496-1, IEC 61496-3 5M1 (IEC 60721-3-5) 3M4 (IEC TR 60721-4-3) 100 m/s², 16 ms 150 m/s², 6 ms
EMC	IEC 61496-1, IEC 61000-6-2, IEC 61000-6-4

[1] Typical ambient light immunity, for ambient light sources directly in the scan plane in accordance with IEC 61496-3: ≤ 3 klx.

OTHER INFORMATION

Type of light	Pulsed laser diode
Wave length	845 nm
Detectable remission factor	1.8% to several 1000%
Laser class	1 (21 CFR 1040.10 and 1040.11, IEC 60825-1)

CERTIFICATES

EU declaration of conformity	✓
UK declaration of conformity	✓
ACMA declaration of conformity	✓
China RoHS	✓
cULus certificate	✓
S Mark certificate	✓
Ethernet/IP certificate	✓
EC-Type-Examination approval	✓
China GB certificate	✓
Information according to Art. 3 of Data Act (Regulation EU 2023/2854)	✓

DIMENSIONAL DRAWING

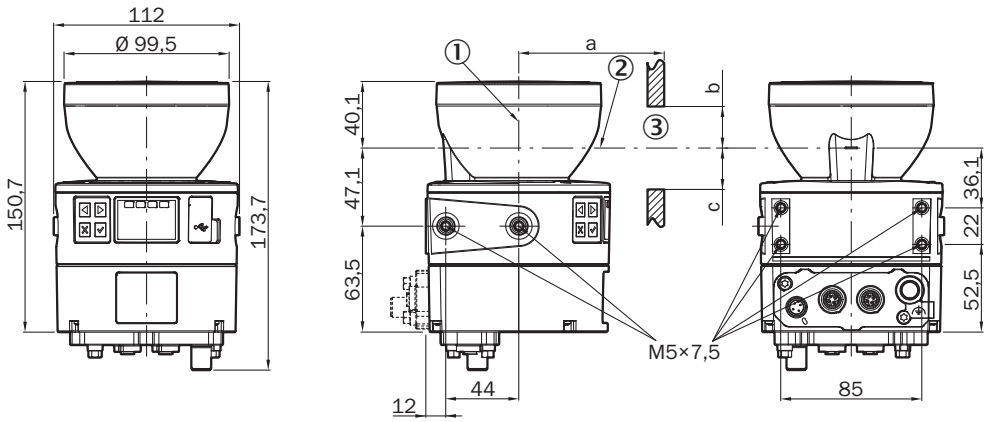

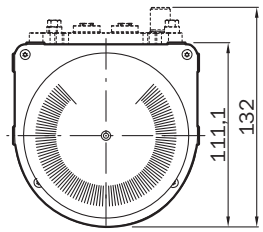

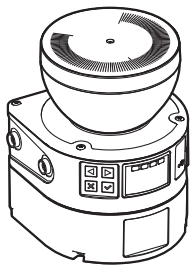

Dimensions in mm (inch)
① mirror axis of rotation
② scan plane
③ required viewing slit (a: length of the viewing slit, b: minimum height above the scan plane, c: minimum height below the scan plane. See the operating instructions for details.)

PINOUTS VOLTAGE SUPPLY (XD1)

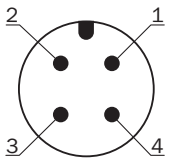

Pin	Designation	Description
1	+24 V DC	Supply voltage +24 V DC
2	n.c.	Not connected
3	0 V DC	Supply voltage 0 V DC
4	FE	Functional earth/shielding
For details see operating instructions		

PINOUTS ETHERNET (XF1, XF2)

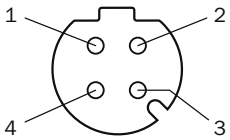

Pin	Designation	Description
1	TX+	Send data +
2	RX+	Receive data +
3	TX-	Send data -

Pin	Designation	Description
4	RX-	Receive data -
Thread	SH	Shielding
For details see operating instructions		

Further information as well as suitable accessories, example applications and downloads such as CAD dimensional models, operating instructions and software can be found at www.sick.com/1082016

SICK AG
WALDKIRCH
GERMANY
SICK.COM

SICK AT A GLANCE

SICK is a leading global technology company for intelligent sensors and integrated solutions in industrial automation. Our technologies set benchmarks, making your industrial processes more efficient, safer and more sustainable – both in logistics and manufacturing operations.

SICK combines sensor intelligence with industry expertise and certified consulting services. We provide the ideal foundation for scalable as well as tailor-made automation solutions and create added value along the entire value chain. Our close partnerships with our customers are more than just a promise: Together, we optimize productivity, improve quality, protect health and safety, and help build a sustainable future. All with empathy and trust.

Since 1946, we have been developing innovative technologies with passion and a pioneering spirit. With a global network in around 40 countries, SICK has a global presence and is always close by. The company's headquarters are located in Waldkirch near Freiburg, Germany. Our customers benefit from our understanding of both local and global requirements, which enables us to deliver tailor-made solutions

SICK
Sensor Intelligence