Product datasheet

Specifications



Illuminated push button, Harmony XB4, metal, blue flush, 22mm, universal LED, plain lens, 1NO + 1NC, 230...240V AC

XB4BW36M5

Important message: A change in appearance may be noted on the product but does not affect its use in terms of function and safety. This makes it compatible with our Universal LED blocks
EAN Code: 3389110119794

Main

Range of product	Harmony XB4
Product or component type	Illuminated push-button
Device short name	XB4
Bezel material	Chromium plated metal
Fixing collar material	Zamak
Mounting diameter	22.5 mm
Sale per indivisible quantity	1
Head type	Standard
Shape of signaling unit head	Round
Type of operator	spring return
Operator profile	Blue flush
Operator additional information	With plain lens
Contacts type and composition	1 NO + 1 NC
Contact operation	Slow-break
Connections - terminals	Screw clamp terminals, <= 2 x 1.5 mm² with cable end conforming to IEC 60947-1 Screw clamp terminals, 1 x 0.22...2 x 2.5 mm² without cable end conforming to IEC 60947-1
Light source	Universal LED
Bulb base	Integral LED
[Us] rated supply voltage	230...240 V AC at 50/60 Hz

Complementary

Height	47 mm
Width	30 mm
Depth	101 mm
Terminals description ISO n°1	(21-22)NC (13-14)NO
Net weight	0.097 kg
Resistance to high pressure washer	7000000 Pa at 55 °C, distance : 0.1 m
Contacts usage	Standard contacts

Disclaimer: This documentation is not intended as a substitute for and is not to be used for determining suitability or reliability of these products for specific user applications

Positive opening	With conforming to IEC 60947-5-1 appendix K
Operating travel	1.5 mm (NC changing electrical state) 2.6 mm (NO changing electrical state) 4.3 mm (total travel)
Operating force	3.5 N NC changing electrical state 3.8 N
Mechanical durability	10000000 cycles
Tightening torque	0.8…1.2 N.m conforming to IEC 60947-1
Shape of screw head	Cross compatible with Philips no 1 screwdriver Cross compatible with pozidriv No 1 screwdriver Slotted compatible with flat Ø 4 mm screwdriver Slotted compatible with flat Ø 5.5 mm screwdriver
Contacts material	Silver alloy (Ag/Ni)
Short-circuit protection	10 A cartridge fuse type gG conforming to IEC 60947-5-1
[Ith] conventional free air thermal current	10 A conforming to IEC 60947-5-1
[Ui] rated insulation voltage	600 V (pollution degree 3) conforming to IEC 60947-1
[Uimp] rated impulse withstand voltage	6 kV conforming to IEC 60947-1
[Ie] rated operational current	3 A at 240 V, AC-15, A600 conforming to IEC 60947-5-1 6 A at 120 V, AC-15, A600 conforming to IEC 60947-5-1 0.1 A at 600 V, DC-13, Q600 conforming to IEC 60947-5-1 0.27 A at 250 V, DC-13, Q600 conforming to IEC 60947-5-1 0.55 A at 125 V, DC-13, Q600 conforming to IEC 60947-5-1 1.2 A at 600 V, AC-15, A600 conforming to IEC 60947-5-1
Electrical durability	1000000 cycles, AC-15, 2 A at 230 V, operating rate <3600 cyc/h, load factor: 0.5 conforming to IEC 60947-5-1 appendix C 1000000 cycles, AC-15, 3 A at 120 V, operating rate <3600 cyc/h, load factor: 0.5 conforming to IEC 60947-5-1 appendix C 1000000 cycles, AC-15, 4 A at 24 V, operating rate <3600 cyc/h, load factor: 0.5 conforming to IEC 60947-5-1 appendix C 1000000 cycles, DC-13, 0.2 A at 110 V, operating rate <3600 cyc/h, load factor: 0.5 conforming to IEC 60947-5-1 appendix C 1000000 cycles, DC-13, 0.5 A at 24 V, operating rate <3600 cyc/h, load factor: 0.5 conforming to IEC 60947-5-1 appendix C
Electrical reliability	Λ < 10exp(-6) at 5 V and 1 mA in clean environment conforming to IEC 60947-5-4 Λ < 10exp(-8) at 17 V and 5 mA in clean environment conforming to IEC 60947-5-4
Signalling type	Steady
Current consumption	14 mA
Service life	100000 h at rated voltage and 25 °C
Surge withstand	1 kV conforming to IEC 61000-4-5
Supply voltage limits	195…264 V AC
Device presentation	Complete product

Environment

Protective treatment	TH
Ambient air temperature for storage	-40…70 °C
Ambient air temperature for operation	-40…70 °C
Electrical shock protection class	Class I conforming to IEC 60536
IP degree of protection	IP66 conforming to IEC 60529 IP67 IP69 IP69K
Enclosure Type	UL type 4X/13

IK degree of protection	IK06 conforming to IEC 50102
Standards	UL 508 IEC 60947-1 IEC 60947-5-5 IEC 60947-5-1 CSA C22.2 No 14 IEC 60947-5-4 JIS C8201-5-1 JIS C8201-1
Product certifications	CSA LROS (Lloyds register of shipping) BV UL listed DNV
Vibration resistance	5 gn (f= 2…500 Hz) conforming to IEC 60068-2-6
Shock resistance	30 gn (duration = 18 ms) for half sine wave acceleration conforming to IEC 60068-2-27 50 gn (duration = 11 ms) for half sine wave acceleration conforming to IEC 60068-2-27
Resistance to fast transients	2 kV conforming to IEC 61000-4-4
Resistance to electromagnetic fields	10 V/m conforming to IEC 61000-4-3
Resistance to electrostatic discharge	6 kV on contact (on metal parts) conforming to IEC 61000-4-2 8 kV in free air (in insulating parts) conforming to IEC 61000-4-2
Electromagnetic emission	Class B conforming to IEC 55011

Packing Units

Unit Type of Package 1	PCE
Number of Units in Package 1	1
Package 1 Height	8.800 cm
Package 1 Width	3.400 cm
Package 1 Length	5.400 cm
Package 1 Weight	96.000 g
Unit Type of Package 2	S03
Number of Units in Package 2	100
Package 2 Height	30 cm
Package 2 Width	30 cm
Package 2 Length	40 cm
Package 2 Weight	10.315 kg

Logistical informations

Country of origin	FR

Contractual warranty

Warranty (in months)	18

Environmental Data

Schneider Electric aims to achieve Net Zero status by 2050 through supply chain partnerships, lower impact materials, and circularity via our ongoing “Use Better, Use Longer, Use Again” campaign to extend product lifetimes and recyclability.

Environmental Data explained >

How we assess product sustainability >

Environmental footprint

Total lifecycle Carbon footprint	**6 kg CO2 eq.**
Carbon footprint of the manufacturing phase [A1 to A3]	**0.7 kg CO2 eq.**
Carbon footprint of the distribution phase [A4]	**0 kg CO2 eq.**
Carbon footprint of the installation phase [A5]	**0 kg CO2 eq.**
Carbon footprint of the use phase [B2, B3, B4, B6]	**5 kg CO2 eq.**
Carbon footprint of the end-of-life phase [C1 to C4]	**0.2 kg CO2 eq.**
Environmental Disclosure	Product Environmental Profile

Use Better

Materials and Substances

Average percentage of recycled plastic content	**28 %**
Average percentage of recycled metal content	**17 %**
Packaging made with recycled cardboard	**Yes**
Packaging without single use plastic	**Yes**
SCIP Number	**425812e5-011f-4fb4-ad1b-fc9cf9865300**
EU RoHS Directive	Compliant By Exemption
REACh Regulation	Reference contains Substances of Very High Concern above the threshold

Use Longer

Lifetime extension

Product repair index	**A**

Use Again

Repack and remanufacture

Recyclability potential, in %	**75**
End of life manual availability	End of Life Information
Take-back	**No**
WEEE Label	**The product must be disposed on European Union markets following specific waste collection and never end up in rubbish bins**

Dimensions Drawings

Dimensions

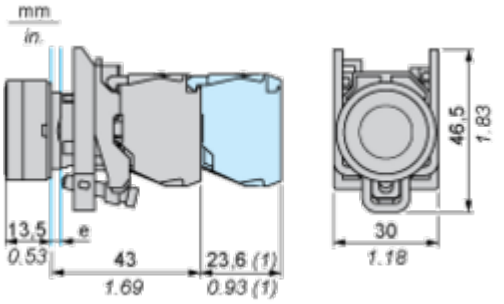

e : clamping thickness: 1 to 6 mm / 0.04 to 0.24 in.
(1) Additional row of contacts or double contact

Mounting and Clearance

Panel Cut-out for Pushbuttons, Switches and Pilot Lights (Finished Holes, Ready for Installation)

Connection by Screw Clamp Terminals or Plug-in Connectors or on Printed Circuit Board	Connection by Faston Connectors
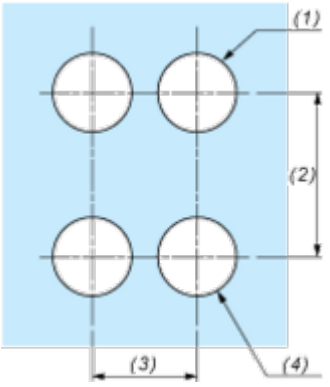	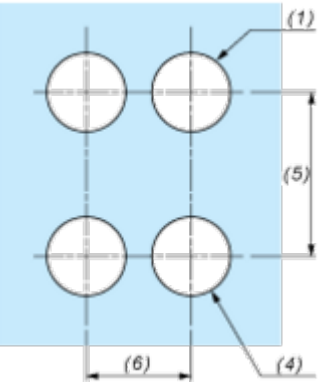
(1) Diameter on finished panel or support **(2)** 40 mm min. / 1.57 in. min. **(3)** 30 mm min. / 1.18 in. min. **(4)** Ø 22.5 mm / 0.89 in. recommended (Ø 22.3 mm $_{0}^{+0.4}$ / 0.88 in. $_{0}^{+0.016}$) **(5)** 45 mm min. / 1.78 in. min. **(6)** 32 mm min. / 1.26 in. min.	

Image of product / Alternate images

Alternative



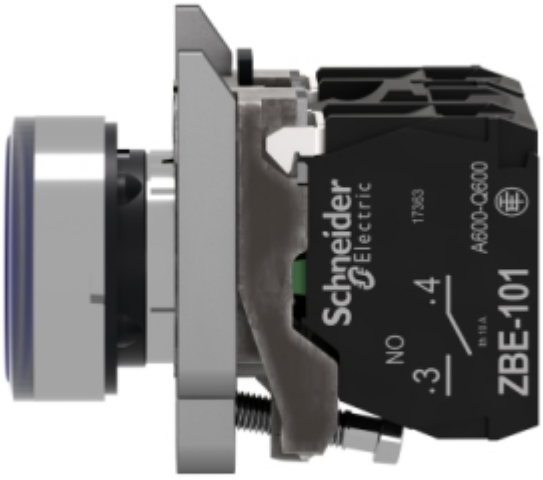








NO 3
X1
NC 1
4
X2
2