Product data sheet

Specifications



analog IO module, Modicon TM3, 2 analog or temperature inputs, 1 analog output, screw, 24V DC

TM3TM3

Product availability: Stock - Normally stocked in distribution facility

Main

Range of Product	Modicon TM3
Product or Component Type	Input/output analog module
Range Compatibility	Modicon M221 Modicon M241 Modicon M251 Modicon M262
Analogue input number	2
Analogue output number	1

Complementary

Analogue input type	Current 4...20 mA Current 0...20 mA Voltage 0...10 V Voltage - 10...10 V Thermocouple - 200...1000 °C thermocouple J Thermocouple - 200...1300 °C thermocouple K Thermocouple 0...1760 °C thermocouple R Thermocouple 0...1760 °C thermocouple S Thermocouple 0...1820 °C thermocouple B Thermocouple - 200...400 °C thermocouple T Thermocouple - 200...1300 °C thermocouple N Thermocouple - 200...800 °C thermocouple E Thermocouple 0...2315 °C thermocouple C Temperature probe - 60...180 °C Ni 100/Ni 1000 Temperature probe - 200...850 °C Pt 100 Temperature probe - 200...600 °C Pt 1000
Analogue input resolution	16 bits 15 bits + sign
Permissible continuous overload	13 V voltage 40 mA current
Stabilisation time	1 ms
Input impedance	<= 50 Ohm >= 1 MOhm
Sampling duration	10 ms
Analogue output type	Current 4...20 mA Current 0...20 mA Voltage 0...10 V Voltage - 10...10 V
Conversion time	100 ms + 100 ms per channel + 1 controller cycle time thermocouple

Disclaimer: This documentation is not intended as a substitute for and is not to be used for determining suitability or reliability of these products for specific user applications

Price is “List Price” and may be subject to a trade discount – check with your local distributor or retailer for actual price.

Absolute accuracy error	+/- 6 °C at 77 °F (25 °C) for thermocouple R, S 0...200 °C +/- 0.4 % of full scale at 77 °F (25 °C) for thermocouple K - 200...0 °C +/- 0.4 % of full scale at 77 °F (25 °C) for thermocouple J - 200...0 °C +/- 0.4 % of full scale at 77 °F (25 °C) for thermocouple E - 200...0 °C +/- 0.4 % of full scale at 77 °F (25 °C) for thermocouple T - 200...0 °C +/- 0.4 % of full scale at 77 °F (25 °C) for thermocouple N - 200...0 °C +/- 0.1 % of full scale at 77 °F (25 °C) for analogue input voltage/current +/- 0.1 % of full scale at 77 °F (25 °C) for thermocouple C 0...2315 °C +/- 0.1 % of full scale at 77 °F (25 °C) for Pt 100/Pt 1000, Ni 100/ Ni 1000 temperature probe +/- 0.1 % of full scale at 77 °F (25 °C) for thermocouple R, S 200...1760 °C +/- 0.1 % of full scale at 77 °F (25 °C) for thermocouple B 300...1820 °C +/- 0.1 % of full scale at 77 °F (25 °C) for thermocouple K 0...1300 °C +/- 0.1 % of full scale at 77 °F (25 °C) for thermocouple J 0...1000 °C +/- 0.1 % of full scale at 77 °F (25 °C) for thermocouple E 0...800 °C +/- 0.1 % of full scale at 77 °F (25 °C) for thermocouple T 0...400 °C +/- 0.1 % of full scale at 77 °F (25 °C) for thermocouple N 0...1300 °C +/- 0.1 % of full scale at 77 °F (25 °C) for analogue output voltage/current
Repeat accuracy	+/-0.5 %FS input
Output ripple	20 mV
Cross talk	<= 1 LSB
Type of cable	Twisted shielded pairs cable <98.4 ft (30 m) input/output
Electrical connection	11 x 2.5 mm² removable screw terminal block with pitch 5.08 mm adjustment for inputs, outputs and supply
LSB value	0.15 mV, 0...10 V 0.30 mV, - 10...10 V 0.30 µA, 0...20 mA 0.244 µA, 4...20 mA 0.1 °C 2.44 mV, 0...10 V 4.88 mV, - 10...10 V 4.88 µA, 0...20 mA 3.91 µA, 4...20 mA
Insulation	Between input and supply 1500 V AC Between input and internal logic 500 V AC Between output and supply 1500 V AC Between output and internal logic 500 V AC
Immunity to microbreaks	10 ms
Load impedance ohmic	1 kOhm voltage 300 Ohm current
load type	Resistive
Temperature drift	+/- 0.006 %FS/°C
Non-linearity	+/- 0.01 %FS analog output +/- 0.1 %FS analog input
Typical current consumption	55 mA 24 V DC no load 55 mA 5 V DC no load 60 mA 5 V DC full load 80 mA 24 V DC full load
Local signalling	1 LED green PWR
Mounting support	Top hat type TH35-15 rail IEC 60715 Top hat type TH35-7.5 rail IEC 60715 plate or panel with fixing kit
Height	3.5 in (90 mm)
Width	0.9 in (23.6 mm)
Depth	2.8 in (70 mm)
Net Weight	0.254 lb(US) (0.115 kg)

Environment

IP Degree of Protection	IP20

Marking	CE
Product certifications	CE UKCA RCM EAC CULus CULus HazLoc
Standards	IEC 61131-2
Electromagnetic emission	Radiated emissions 40 dBµV/m QP class A 10 m)30…230 MHz IEC 55011 Radiated emissions 47 dBµV/m QP class A 10 m)230…1000 MHz IEC 55011
Ambient air temperature for operation	14…131 °F (-10…55 °C) horizontal installation) 14…95 °F (-10…35 °C) vertical installation)
Ambient air temperature for storage	-13…158 °F (-25…70 °C)
Relative humidity	10…95 % without condensation
Operating altitude	0...6561.68 ft (0...2000 m)
Pollution degree	2
Vibration resistance	3.5 mm 5…8.4 Hz) on DIN rail 3 gn 8.4…150 Hz) on DIN rail
Shock resistance	15 gn 11 ms

Ordering and shipping details

Category	US10MSX22533
Discount Schedule	0MSX
GTIN	3606480649042
Returnability	Yes
Country of origin	JP

Packing Units

Unit Type of Package 1	PCE
Nbr. of units in pkg.	1
Package 1 Height	2.996 in (7.611 cm)
Package 1 Width	4.208 in (10.688 cm)
Package 1 Length	5.021 in (12.753 cm)
Package weight(Lbs)	7.8 oz (220.0 g)
Unit Type of Package 2	S04
Number of Units in Package 2	42
Package 2 Height	11.8 in (30 cm)
Package 2 Width	15.7 in (40 cm)
Package 2 Length	23.6 in (60 cm)
Package 2 Weight	22.974 lb(US) (10.421 kg)
Unit Type of Package 3	P12
Number of Units in Package 3	504
Package 3 Height	41.3 in (105 cm)
Package 3 Width	47.2 in (120 cm)
Package 3 Length	31.5 in (80 cm)

Package 3 Weight	286.6 lb(US) (130 kg)

Contractual warranty

Warranty (in months)	18

Environmental Data

Schneider Electric aims to achieve Net Zero status by 2050 through supply chain partnerships, lower impact materials, and circularity via our ongoing “Use Better, Use Longer, Use Again” campaign to extend product lifetimes and recyclability.

Environmental Data explained >

How we assess product sustainability >

Environmental footprint

Total lifecycle Carbon footprint	**99 kg CO2 eq.**
Carbon footprint of the manufacturing phase [A1 to A3]	**14 kg CO2 eq.**
Carbon footprint of the distribution phase [A4]	**0 kg CO2 eq.**
Carbon footprint of the installation phase [A5]	**0 kg CO2 eq.**
Carbon footprint of the use phase [B2, B3, B4, B6]	**84 kg CO2 eq.**
Carbon footprint of the end-of-life phase [C1 to C4]	**0.5 kg CO2 eq.**
Environmental Disclosure	**Product Environmental Profile**

Use Better

Materials and Substances

Packaging made with recycled cardboard	**Yes**
Packaging without single use plastic	**Yes**
EU RoHS Directive	**Compliant**
REACh Regulation	**Reference contains Substances of Very High Concern above the threshold**
California proposition 65	**WARNING: This product can expose you to chemicals including: Lead and lead compounds, which is known to the State of California to cause cancer and birth defects or other reproductive harm. For more information go to www.P65Warnings.ca.gov**
PVC free	**Yes**

Use Again

Repack and remanufacture

Recyclability potential, in %	**3**
Circularity Profile	**End of Life Information**
Take-back	**No**
WEEE Label	**The product must be disposed on European Union markets following specific waste collection and never end up in rubbish bins.**

Dimensions Drawings

Dimensions

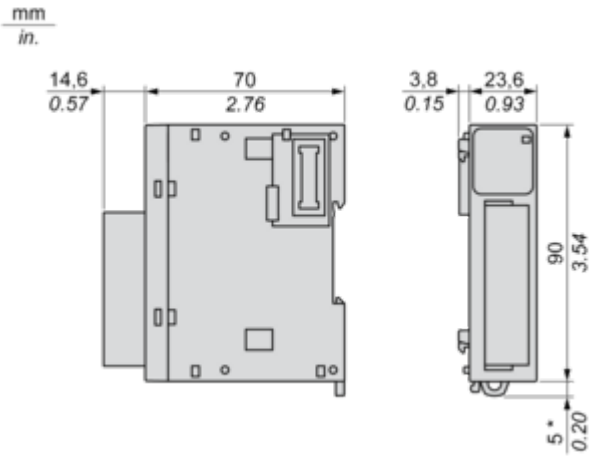

(*) 8.5 mm/0.33 in when the clamp is pulled out.

Mounting and Clearance

Spacing Requirements

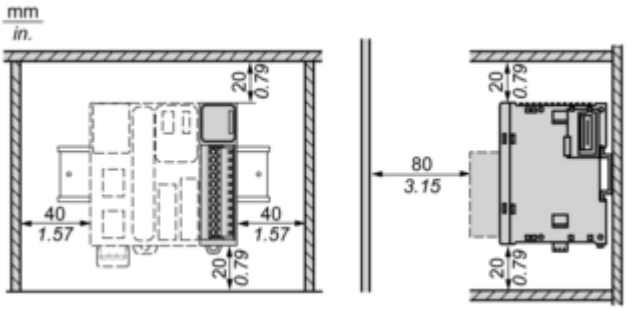

Mounting on a Rail

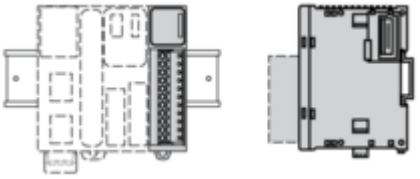

Incorrect Mounting

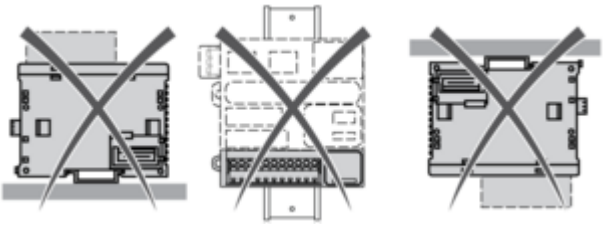

Mounting on a Panel Surface

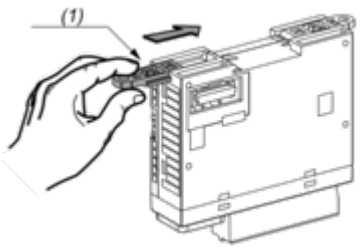

(1) Install a mounting strip

Mounting Hole Layout

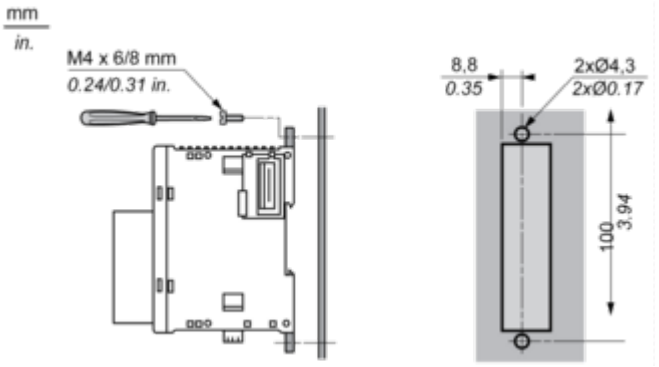

Connections and Schema

Analogue Mixed I/O Module

Wiring Diagram (Current/Voltage type)

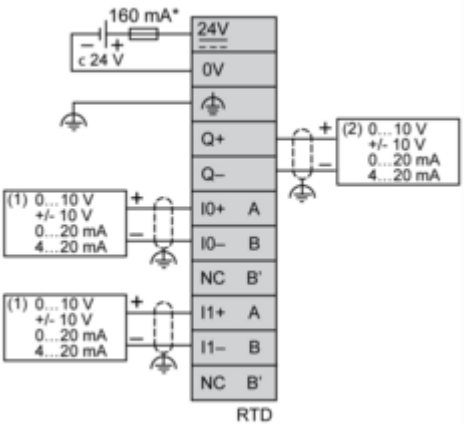

(*) Type T fuse
(1) Current/Voltage analog output device
(2) Current/Voltage analog input device

Wiring Diagram (Thermocouple input type)

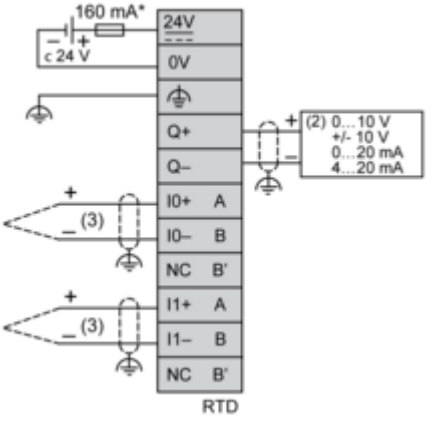

(*) Type T fuse
(2) Current/Voltage analog input device
(3) Thermocouple

Wiring Diagram (Temperature probe input type)

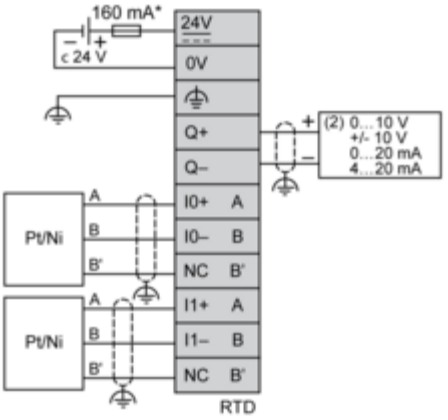

(*) Type T fuse
(2) Current/Voltage analog input device