Product data sheet

Specifications



discrete output module, Modicon TM3, 32 outputs transistor PNP, HE10

TM3DQ32TK

Product availability: Stock - Normally stocked in distribution facility

Main

Range of Product	Modicon TM3
Product or Component Type	Discrete output module
Range Compatibility	Modicon M241 Modicon M251 Modicon M221 Modicon M262
Device Application	Industrial Application
Discrete output number	32
Discrete output logic	Positive logic (source)
Discrete output voltage	24 V DCtransistor

Complementary

Discrete output number	32 transistor
Discrete output current	100 mA transistor output
Response time on output	450 µs maximum (turn on) 450 µs maximum (turn off)
Maximum leakage current	0.1 mA
Maximum voltage drop	<0.4 V
Maximum tungsten load	<1.2 W
Power supply type	Electronic powered by internal bus
Typical current consumption	5 mA 5 V DC 0 mA 24 V DC 20 mA 5 V DC 10 mA 24 V DC
Electrical connection	HE-10 connector for outputs
Maximum cable distance between devices	Unshielded cable <16.4 ft (5 m) transistor output
Isolation between channels and bus	500 V AC
Local signalling	1 LED per channel (green) for output status
Housing Colour	Grey
Mounting support	Top hat type TH35-15 rail IEC 60715 Top hat type TH35-7.5 rail IEC 60715 plate or panel with fixing kit
Height	3.5 in (90 mm)
Width	1.3 in (33.5 mm)
Depth	3.2 in (81.3 mm)
Net Weight	0.247 lb(US) (0.112 kg)

Price is “List Price” and may be subject to a trade discount – check with your local distributor or retailer for actual price.

Disclaimer: This documentation is not intended as a substitute for and is not to be used for determining suitability or reliability of these products for specific user applications

Environment

IP Degree of Protection	IP20
Protective treatment	None
Marking	CE
Product certifications	CE CULus UKCA RCM EAC CULus HazLoc
Standards	IEC 61131-2
Ambient air temperature for operation	14…95 °F (-10…35 °C) vertical installation) 14…131 °F (-10…55 °C) horizontal installation)
Ambient air temperature for storage	-13…158 °F (-25…70 °C)
Relative humidity	10…95 % without condensation for operation 10…95 % without condensation for storage
Operating altitude	0...6561.68 ft (0...2000 m)
Pollution degree	2
Vibration resistance	3.5 mm 5…8.4 Hz) on DIN rail 3 gn 8.4…150 Hz) on DIN rail 3.5 mm 5…8.4 Hz) on panel mounting 3 gn 8.4…150 Hz) on panel mounting
Shock resistance	15 gn 11 ms

Ordering and shipping details

Category	US10MSX22533
Discount Schedule	0MSX
GTIN	3606480611513
Returnability	Yes
Country of origin	TW

Packing Units

Unit Type of Package 1	PCE
Nbr. of units in pkg.	1
Package 1 Height	3.150 in (8.000 cm)
Package 1 Width	4.331 in (11.000 cm)
Package 1 Length	5.118 in (13.000 cm)
Package weight(Lbs)	7.407 oz (210.000 g)
Unit Type of Package 2	S04
Number of Units in Package 2	42
Package 2 Height	11.811 in (30.000 cm)
Package 2 Width	15.748 in (40.000 cm)
Package 2 Length	23.622 in (60.000 cm)
Package 2 Weight	23.016 lb(US) (10.440 kg)
Unit Type of Package 3	P12
Number of Units in Package 3	504

Package 3 Height	29.528 in (75.000 cm)
Package 3 Width	31.496 in (80.000 cm)
Package 3 Length	47.244 in (120.000 cm)
Package 3 Weight	305.120 lb(US) (138.400 kg)

Contractual warranty

Warranty (in months)	18

Environmental Data

Schneider Electric aims to achieve Net Zero status by 2050 through supply chain partnerships, lower impact materials, and circularity via our ongoing “Use Better, Use Longer, Use Again” campaign to extend product lifetimes and recyclability.

Environmental Data explained >

How we assess product sustainability >

Environmental footprint

Total lifecycle Carbon footprint	**50 kg CO2 eq.**
Carbon footprint of the manufacturing phase [A1 to A3]	**9 kg CO2 eq.**
Carbon footprint of the distribution phase [A4]	**0 kg CO2 eq.**
Carbon footprint of the installation phase [A5]	**0 kg CO2 eq.**
Carbon footprint of the use phase [B2, B3, B4, B6]	**41 kg CO2 eq.**
Carbon footprint of the end-of-life phase [C1 to C4]	**0.3 kg CO2 eq.**
Environmental Disclosure	**Product Environmental Profile**

Use Better

Materials and Substances

Packaging made with recycled cardboard	**Yes**
Packaging without single use plastic	**Yes**
SCIP Number	**7cc01735-94b8-432b-9a81-f9da4dd7709d**
EU RoHS Directive	**Compliant**
REACh Regulation	**Reference contains Substances of Very High Concern above the threshold**
California proposition 65	**WARNING: This product can expose you to chemicals including: Lead and lead compounds, which is known to the State of California to cause cancer and birth defects or other reproductive harm. For more information go to www.P65Warnings.ca.gov**
PVC free	**Yes**

Use Again

Repack and remanufacture

Recyclability potential, in %	**3**
Circularity Profile	**End of Life Information**
Take-back	**No**
WEEE Label	**The product must be disposed on European Union markets following specific waste collection and never end up in rubbish bins.**

Dimensions Drawings

Dimensions

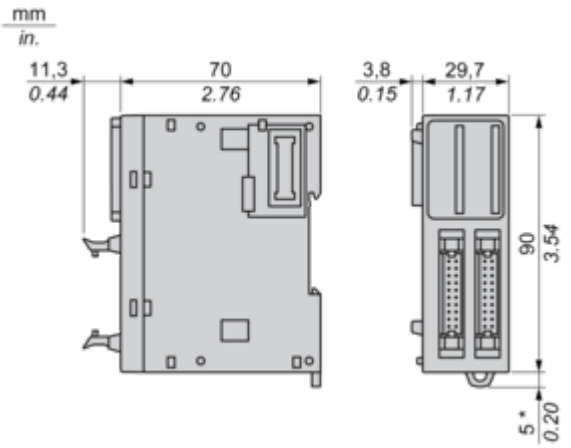

(*) 8.5 mm/0.33 in. when the clamp is pulled out.

Mounting and Clearance

Spacing Requirements

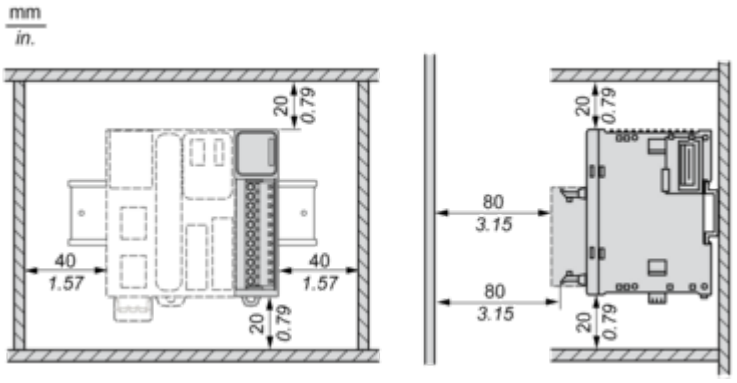

Mounting on a Rail

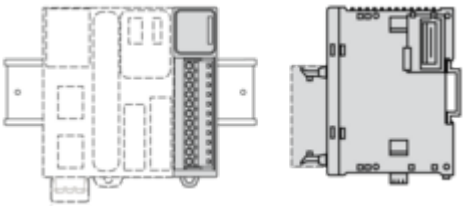

Incorrect Mounting

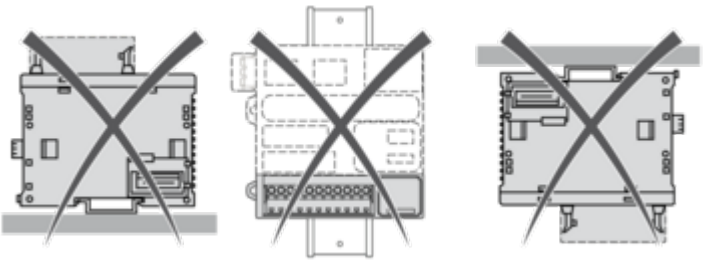

Mounting on a Panel Surface

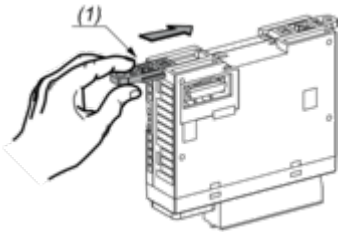

(1) Install a mounting strip

Mounting Hole Layout

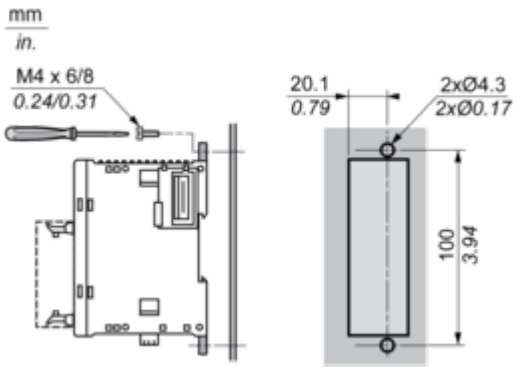

Connections and Schema

Digital Transistor Output Module (32-channel, Source)

Wiring Diagram

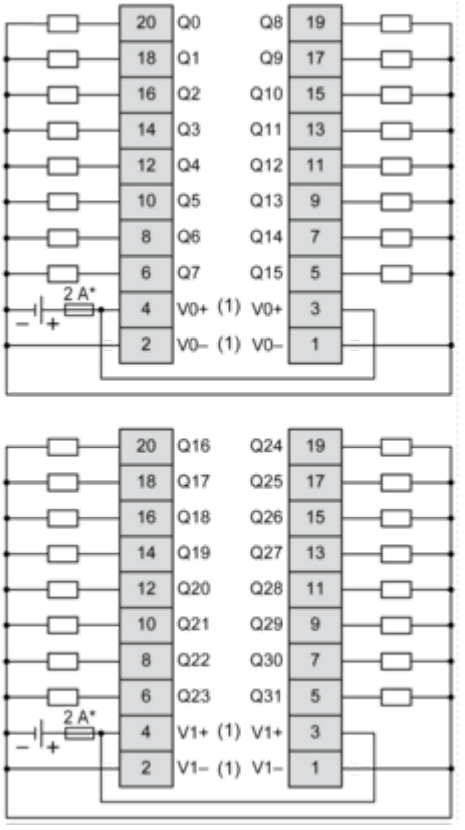

(*) Type T fuse
(1) The V0+ terminals are connected internally.
The V0- terminals are connected internally.
The V1+ terminals are connected internally.
The V1- terminals are connected internally.
The V0+ and V1+ terminals are not connected internally.
The V0- and V1- terminals are not connected internally.