Product datasheet

Specifications



module TM3 - 16 outputs relays spring

TM3DQ16RG

Main

Range of product	Modicon TM3
Product or component type	Discrete output module
Range compatibility	Modicon M241 Modicon M251 Modicon M221 Modicon M262
Device application	Industrial application
Discrete output number	16
Discrete output logic	Positive or negative
Discrete output voltage	240 V AC for relay outputs 30 V DC for relay outputs

Complementary

Discrete output number	16 relay normally open
Discrete output current	2000 mA relay output
Minimum switching current	10 mA 5 V DC
Response time on output	<= 10 ms maximum (turn on) <= 5 ms maximum (turn off)
Mechanical durability	20000000 cycles
Safety reliability data	MTBF = 130 years 40 °C
Power supply type	Electronic powered by internal bus
Typical current consumption	37 mA at 5 V DC 5 mA
Electrical connection	10 x 1.5 mm² removable spring terminal block with pitch 3.81 mm adjustment for outputs
Maximum cable distance between devices	Unshielded cable: <30 m for relay output
Isolation between channels and bus	500 V AC
Local signalling	1 LED per channel (green) for output status
Housing colour	Grey
AWG gauge	0.14…1.5 mm² / 26 AWG...16 AWG with solid cable
Mounting support	Top hat type TH35-15 rail conforming to IEC 60715 Top hat type TH35-7.5 rail conforming to IEC 60715 plate or panel with fixing kit
Height	90 mm
Width	27.4 mm
Depth	84.6 mm

Excluding VAT, FCA Jabal Ali & are subject to change – check with your local distributor.

Disclaimer: This documentation is not intended as a substitute for and is not to be used for determining suitability or reliability of these products for specific user applications

Net weight	0.145 kg

Environment

IP degree of protection	IP20
Protective treatment	None
Marking	CE
Product certifications	CE CULus UKCA RCM EAC CULus HazLoc
Standards	IEC 61131-2
Ambient air temperature for operation	-10…35 °C (vertical installation) -10…55 °C (horizontal installation)
Ambient air temperature for storage	-25…70 °C
Relative humidity	10…95 % without condensation for operation 10…95 % without condensation for storage
Operating altitude	0...2000 m
Pollution degree	2
Vibration resistance	3.5 mm (f = 5…8.4 Hz) on DIN rail 3 gn (f = 8.4…150 Hz) on DIN rail 3.5 mm (f = 5…8.4 Hz) on panel mounting 3 gn (f = 8.4…150 Hz) on panel mounting
Shock resistance	15 gn for 11 ms

Packing Units

Unit Type of Package 1	PCE
Number of Units in Package 1	1
Package 1 Height	7.5 cm
Package 1 Width	12.5 cm
Package 1 Length	10.5 cm
Package 1 Weight	245.0 g
Unit Type of Package 2	S04
Number of Units in Package 2	42
Package 2 Height	30 cm
Package 2 Width	40 cm
Package 2 Length	60 cm
Package 2 Weight	11.273 kg
Unit Type of Package 3	P12
Number of Units in Package 3	504
Package 3 Height	105 cm
Package 3 Width	120 cm
Package 3 Length	80 cm
Package 3 Weight	145 kg

Contractual warranty

Warranty (in months)	18

Environmental Data

Schneider Electric aims to achieve Net Zero status by 2050 through supply chain partnerships, lower impact materials, and circularity via our ongoing “Use Better, Use Longer, Use Again” campaign to extend product lifetimes and recyclability.

Environmental Data explained >

How we assess product sustainability >

Environmental footprint

Total lifecycle Carbon footprint	**86 kg CO2 eq.**
Carbon footprint of the manufacturing phase [A1 to A3]	**17 kg CO2 eq.**
Carbon footprint of the distribution phase [A4]	**0.1 kg CO2 eq.**
Carbon footprint of the installation phase [A5]	**0 kg CO2 eq.**
Carbon footprint of the use phase [B2, B3, B4, B6]	**68 kg CO2 eq.**
Carbon footprint of the end-of-life phase [C1 to C4]	**0.6 kg CO2 eq.**
Environmental Disclosure	Product Environmental Profile

Use Better

Materials and Substances

Packaging made with recycled cardboard	**Yes**
Packaging without single use plastic	**Yes**
EU RoHS Directive	Compliant
REACh Regulation	Reference contains Substances of Very High Concern above the threshold
PVC free	**Yes**

Use Again

Repack and remanufacture

Recyclability potential, in %	**3**
End of life manual availability	End of Life Information
Take-back	**No**
WEEE Label	**The product must be disposed on European Union markets following specific waste collection and never end up in rubbish bins**

Dimensions Drawings

Dimensions

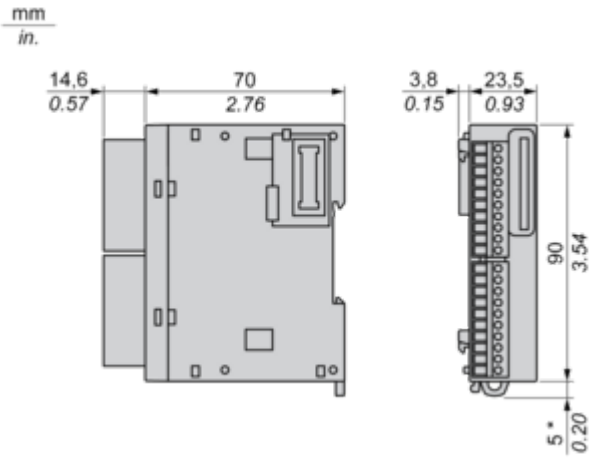

(*) 8.5 mm/0.33 in. when the clamp is pulled out.

Mounting and Clearance

Spacing Requirements

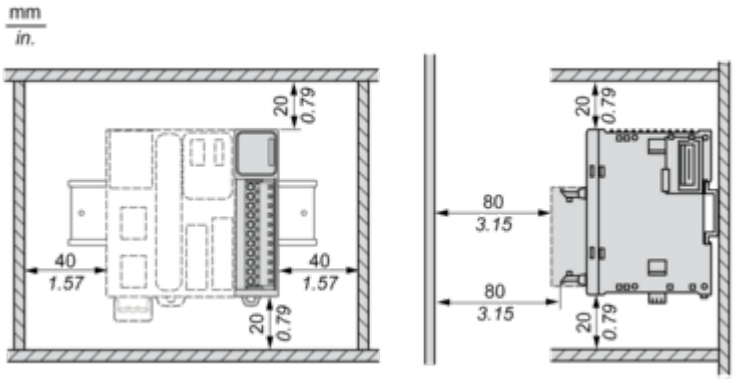

Mounting on a Rail

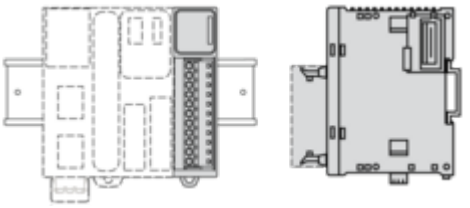

Incorrect Mounting

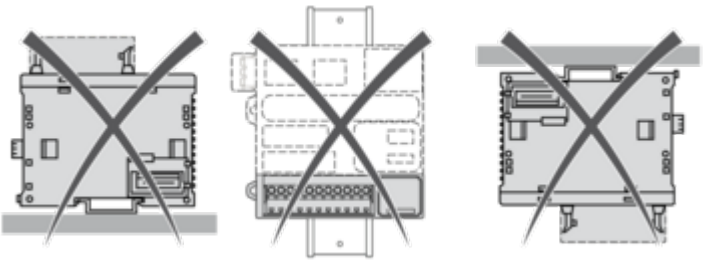

Mounting on a Panel Surface

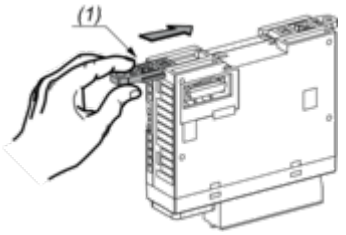

(1) Install a mounting strip

Mounting Hole Layout

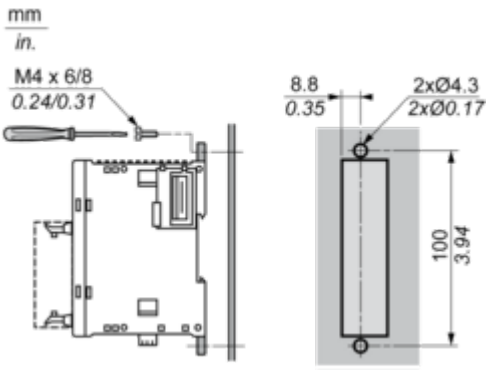

Connections and Schema

Digital Relay Output Module (16-channel)

Wiring Diagram (Positive Logic)

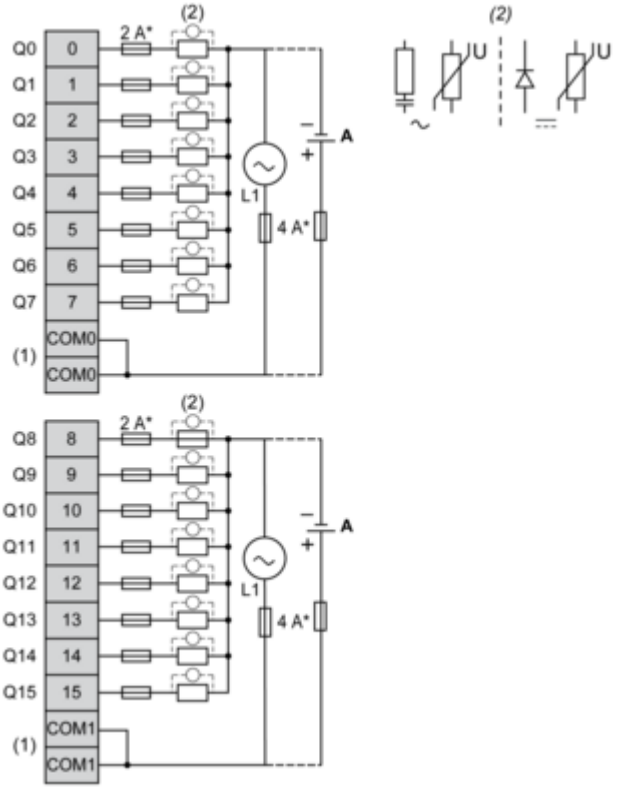

(*) Type T fuse
(1) The COM0 and COM1 terminals are **not** connected internally.
(2) To improve the life time of the contacts, and to protect from potential inductive load damage, it is recommended to connect a free wheeling diode in parallel to each inductive DC load or an RC snubber in parallel of each inductive AC load.
(A) Source wiring (positive logic).

Wiring Diagram (Negative Logic)

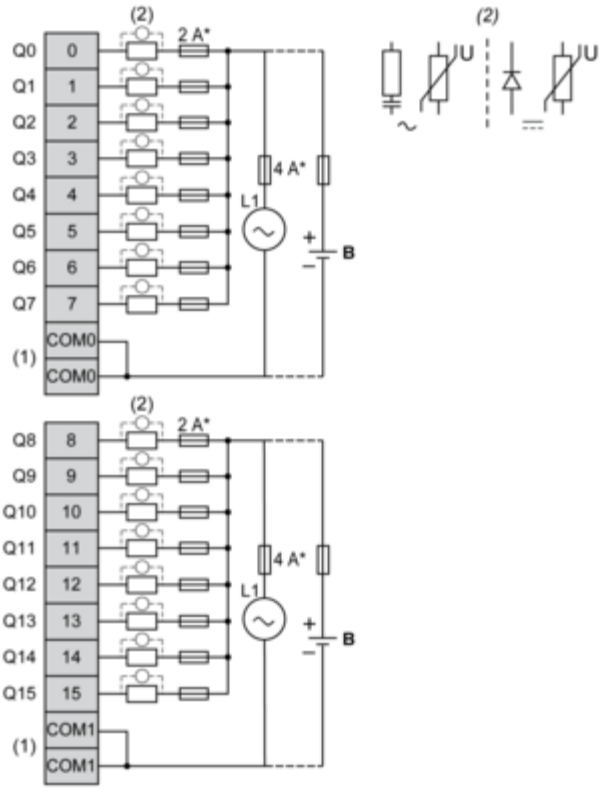

(*) Type T fuse
(1) The COM0 and COM1 terminals are **not** connected internally.
(2) To improve the life time of the contacts, and to protect from potential inductive load damage, it is recommended to connect a free wheeling diode in parallel to each inductive DC load or an RC snubber in parallel of each inductive AC load.
(B) Sink wiring (negative logic)