Product data sheet

Specifications



discrete IO module, Modicon TM3, 24 IO, 16 inputs, 8 relay outputs, screw, 24V DC

TM3DM24R

Product availability: Stock - Normally stocked in distribution facility

Main

Range of Product	Modicon TM3
Product or Component Type	Discrete I/O module
Range Compatibility	Modicon M241 Modicon M251 Modicon M221 Modicon M262
Device Application	Industrial Application
Discrete input number	16
Discrete input logic	Sink or source (positive/negative)
Discrete output number	8
Discrete output logic	Positive or negative
Discrete output voltage	24 V DCrelay outputs 240 V ACrelay outputs

Complementary

Discrete input compatibility	16 conforming to IEC 61131-2 Type 1
Discrete input current	7 mA
Voltage state 1 guaranteed	Input 15...28.8 V DC
Voltage state 0 guaranteed	0...5 V input
Current state 1 guaranteed	>= 2.5 mA input
Current state 0 guaranteed	<= 1 mA input
Input impedance	3.4 kOhm
Response time on input	4 ms (maximum (turn on)) 4 ms (maximum (turn off))
Discrete output number	8 relay normally open
Discrete output current	2000 mA relay output
Minimum switching current	10 mA 5 V DC
Response time on output	<= 10 ms maximum (turn on) <= 5 ms maximum (turn off)
Mechanical durability	20000000 cycles
Safety reliability data	MTBF = 130 years 40 °C
Power supply type	Electronic powered by internal bus
Typical current consumption	5 mA 5 V DC 0 mA 24 V DC 65 mA 5 V DC

Price is “List Price” and may be subject to a trade discount – check with your local distributor or retailer for actual price.

Disclaimer: This documentation is not intended as a substitute for and is not to be used for determining suitability or reliability of these products for specific user applications

Electrical connection	17 x 1.5 mm² removable screw terminal block with pitch 3.81 mm adjustment for inputs 11 x 1.5 mm² removable screw terminal block with pitch 3.81 mm adjustment for outputs
Maximum cable distance between devices	Unshielded cable <98.4 ft (30 m) regular input
Local signalling	1 LED per channel (green) for I/O state
Housing Colour	Grey
AWG gauge	0.0003…0.002 in² (0.2…1.5 mm²) / 26 AWG...16 AWG with solid cable
Mounting support	Top hat type TH35-15 rail IEC 60715 Top hat type TH35-7.5 rail IEC 60715 plate or panel with fixing kit
Height	3.5 in (90 mm)
Width	1.7 in (42.9 mm)
Depth	3.3 in (84.6 mm)

Environment

IP Degree of Protection	IP20
Protective treatment	None
Marking	CE
Product certifications	CE CULus UKCA RCM EAC CULus HazLoc
Standards	IEC 61131-2
Ambient air temperature for operation	14…95 °F (-10…35 °C) vertical installation) 14…131 °F (-10…55 °C) horizontal installation)
Ambient air temperature for storage	-13…158 °F (-25…70 °C)
Relative humidity	10…95 % without condensation for operation 10…95 % without condensation for storage
Operating altitude	0...6561.68 ft (0...2000 m)
Pollution degree	2
Vibration resistance	3.5 mm 5…8.4 Hz) on DIN rail 3 gn 8.4…150 Hz) on DIN rail 3.5 mm 5…8.4 Hz) on panel mounting 3 gn 8.4…150 Hz) on panel mounting
Shock resistance	15 gn 11 ms

Ordering and shipping details

Category	US10MSX22533
Discount Schedule	0MSX
GTIN	3606480611544
Returnability	Yes
Country of origin	TW

Packing Units

Unit Type of Package 1	PCE
Nbr. of units in pkg.	1

Package 1 Height	3.150 in (8.000 cm)
Package 1 Width	3.937 in (10.000 cm)
Package 1 Length	5.118 in (13.000 cm)
Package weight(Lbs)	9.735 oz (276.000 g)
Unit Type of Package 2	S04
Number of Units in Package 2	42
Package 2 Height	11.811 in (30.000 cm)
Package 2 Width	15.748 in (40.000 cm)
Package 2 Length	23.622 in (60.000 cm)
Package 2 Weight	27.055 lb(US) (12.272 kg)
Unit Type of Package 3	P12
Number of Units in Package 3	504
Package 3 Height	41.339 in (105.000 cm)
Package 3 Width	31.496 in (80.000 cm)
Package 3 Length	47.244 in (120.000 cm)
Package 3 Weight	317.466 lb(US) (144.000 kg)

Contractual warranty

Warranty (in months)	18

Environmental Data

Schneider Electric aims to achieve Net Zero status by 2050 through supply chain partnerships, lower impact materials, and circularity via our ongoing “Use Better, Use Longer, Use Again” campaign to extend product lifetimes and recyclability.

Environmental Data explained >

How we assess product sustainability >

Environmental footprint

Total lifecycle Carbon footprint	**26 kg CO2 eq.**
Carbon footprint of the manufacturing phase [A1 to A3]	**12 kg CO2 eq.**
Carbon footprint of the distribution phase [A4]	**0 kg CO2 eq.**
Carbon footprint of the installation phase [A5]	**0 kg CO2 eq.**
Carbon footprint of the use phase [B2, B3, B4, B6]	**13 kg CO2 eq.**
Carbon footprint of the end-of-life phase [C1 to C4]	**0.4 kg CO2 eq.**
Environmental Disclosure	Product Environmental Profile

Use Better

Materials and Substances

Packaging made with recycled cardboard	**Yes**
Packaging without single use plastic	**Yes**
EU RoHS Directive	Compliant
REACh Regulation	Reference contains Substances of Very High Concern above the threshold
California proposition 65	**WARNING: This product can expose you to chemicals including: Lead and lead compounds, which is known to the State of California to cause cancer and birth defects or other reproductive harm. For more information go to www.P65Warnings.ca.gov**
PVC free	**Yes**

Use Again

Repack and remanufacture

Recyclability potential, in %	**3**
Circularity Profile	End of Life Information
Take-back	**No**
WEEE Label	**The product must be disposed on European Union markets following specific waste collection and never end up in rubbish bins.**

Dimensions Drawings

Dimensions

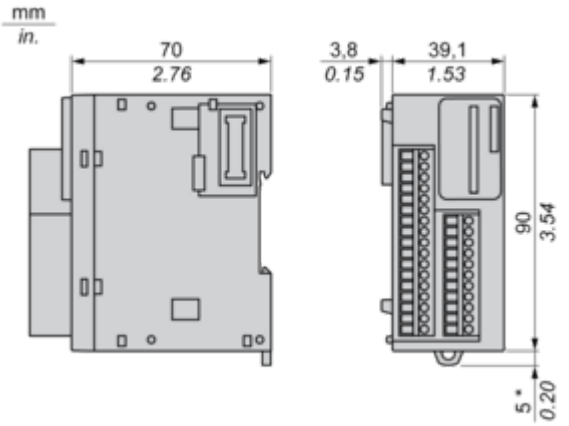

(*) 8.5 mm/0.33 in. when the clamp is pulled out.

Mounting and Clearance

Spacing Requirements

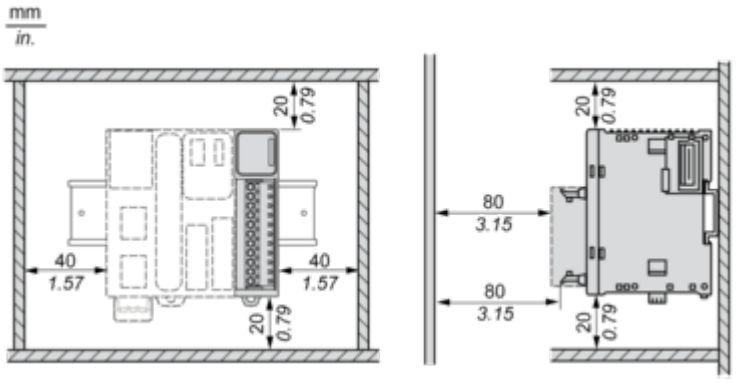

Mounting on a Rail

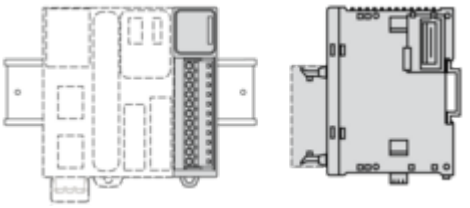

Incorrect Mounting

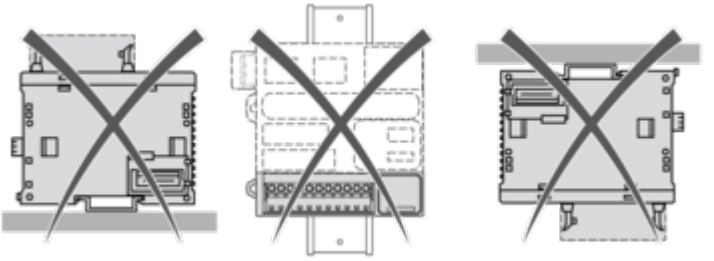

Mounting on a Panel Surface

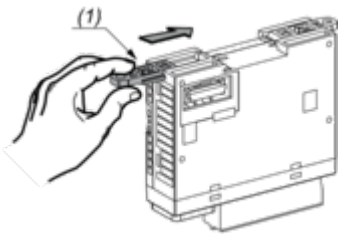

(1) Install a mounting strip

Mounting Hole Layout

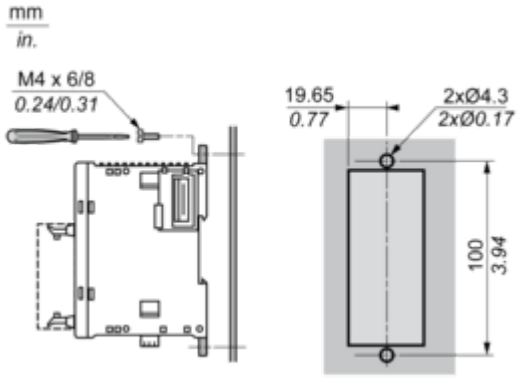

Connections and Schema

Digital Mixed I/O Module (24-channel)

Wiring Diagram (Source)

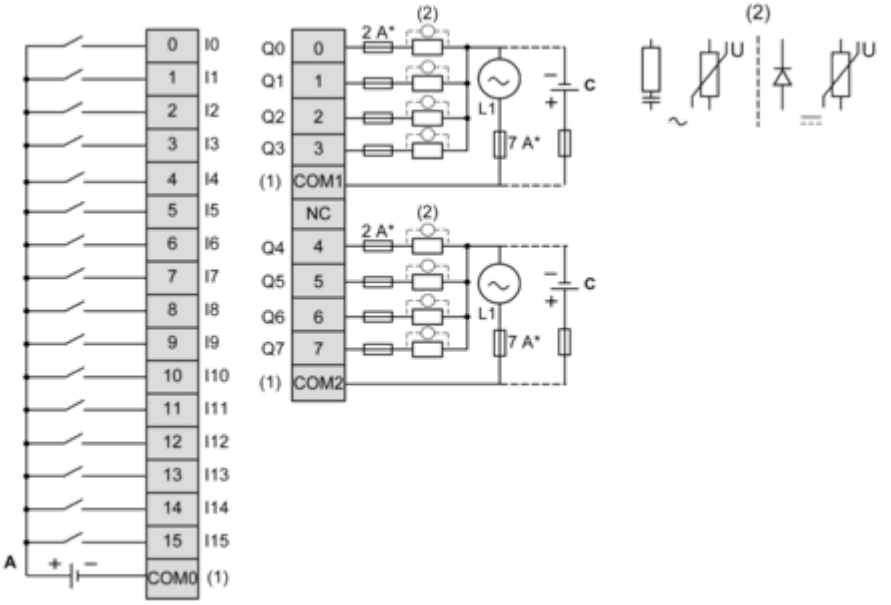

(*) Type T fuse
(1) The COM0, COM1 and COM2 terminals are **not** connected internally.
(2) To improve the life time of the contacts, and to protect from potential inductive load damage, it is recommended to connect a free wheeling diode in parallel to each inductive DC load or an RC snubber in parallel of each inductive AC load.
(A) Sink wiring (positive logic)
(C) Source wiring (positive logic)

Wiring Diagram (Sink)

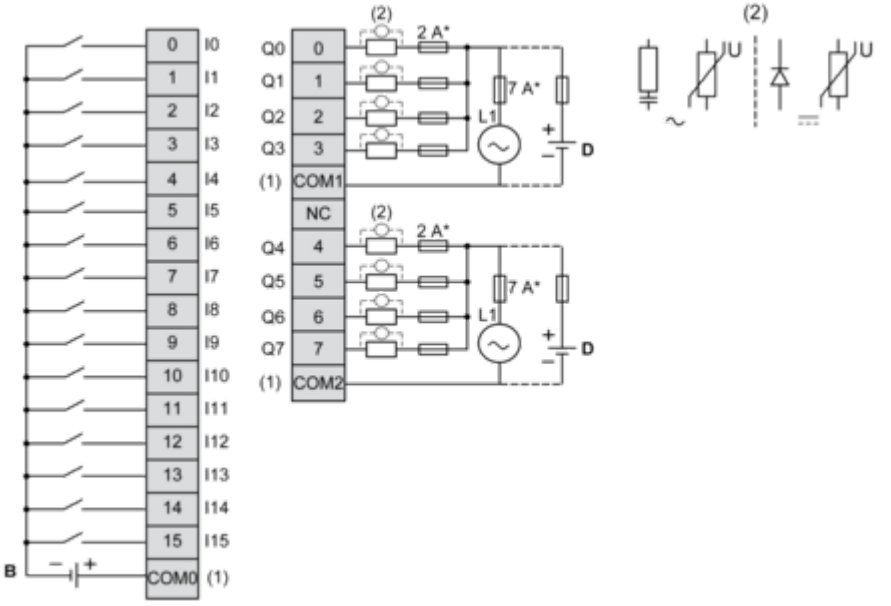

(*) Type T fuse
(1) The COM0, COM1 and COM2 terminals are **not** connected internally.
(2) To improve the life time of the contacts, and to protect from potential inductive load damage, it is recommended to connect a free wheeling diode in parallel to each inductive DC load or an RC snubber in parallel of each inductive AC load.
(B) Source wiring (negative logic)
(D) Sink wiring (negative logic)