Product datasheet

Specifications



module TM3 - 2 analog outputs

TM3AQ2

Main

Range of product	Modicon TM3
Product or component type	Analog output module
Range compatibility	Modicon M221 Modicon M241 Modicon M251 Modicon M262
Analogue output number	2

Complementary

Analogue input resolution	12 bits 11 bits + sign
Stabilisation time	1 ms
Analogue output type	Current: 4...20 mA Current: 0...20 mA Voltage: 0...10 V Voltage: - 10...10 V
Conversion time	1 ms + 1 ms per channel + 1 controller cycle time
Absolute accuracy error	+/- 0.1 % of full scale at 25 °C +/- 1 % of full scale
Repeat accuracy	+/- 0.4 %FS
Output ripple	20 mV
Cross talk	<= 1 LSB
Type of cable	Twisted shielded pairs cable <30 m for output circuit
Electrical connection	11 x 2.5 mm² removable screw terminal block with pitch 5.08 mm adjustment for outputs and supply
LSB value	2.44 mV, 0...10 V 4.88 mV, - 10...10 V 4.88 µA, 0...20 mA 3.91 µA, 4...20 mA
Insulation	Between output and supply at 1500 V AC Between output and internal logic at 500 V AC
Immunity to microbreaks	10 ms
Load impedance ohmic	1 kOhm voltage 300 Ohm current
load type	Resistive
Temperature drift	+/- 0.006 %FS/°C
Non-linearity	+/- 0.01 %FS

Excluding VAT, FCA Jabal Ali & are subject to change – check with your local distributor.

Disclaimer: This documentation is not intended as a substitute for and is not to be used for determining suitability or reliability of these products for specific user applications

Typical current consumption	40 mA at 5 V DC full load 35 mA at 5 V DC no load 30 mA at 24 V DC no load 70 mA at 24 V DC full load
Local signalling	1 LED green for PWR
Mounting support	Top hat type TH35-15 rail conforming to IEC 60715 Top hat type TH35-7.5 rail conforming to IEC 60715 plate or panel with fixing kit
Height	90 mm
Width	23.6 mm
Depth	70 mm
Net weight	0.115 kg

Environment

IP degree of protection	IP20
Marking	CE
Product certifications	CE UKCA RCM EAC CULus CULus HazLoc
Standards	IEC 61131-2
Electromagnetic emission	Radiated emissions - test level: 40 dBµV/m QP class A (10 m) at 30…230 MHz conforming to IEC 55011 Radiated emissions - test level: 47 dBµV/m QP class A (10 m) at 230…1000 MHz conforming to IEC 55011
Ambient air temperature for operation	-10…55 °C (horizontal installation) -10…35 °C (vertical installation)
Ambient air temperature for storage	-25…70 °C
Relative humidity	10…95 % without condensation
Operating altitude	0...2000 m
Pollution degree	2
Vibration resistance	3.5 mm (f = 5…8.4 Hz) on DIN rail 3 gn (f = 8.4…150 Hz) on DIN rail
Shock resistance	15 gn for 11 ms

Packing Units

Unit Type of Package 1	PCE
Number of Units in Package 1	1
Package 1 Height	7.566 cm
Package 1 Width	10.629 cm
Package 1 Length	12.698 cm
Package 1 Weight	220.0 g
Unit Type of Package 2	S04
Number of Units in Package 2	42
Package 2 Height	30 cm
Package 2 Width	40 cm

Package 2 Length	60 cm
Package 2 Weight	10.32 kg
Unit Type of Package 3	P12
Number of Units in Package 3	336
Package 3 Height	75 cm
Package 3 Width	120 cm
Package 3 Length	80 cm
Package 3 Weight	94 kg

Contractual warranty

Warranty (in months)	18

Environmental Data

Schneider Electric aims to achieve Net Zero status by 2050 through supply chain partnerships, lower impact materials, and circularity via our ongoing “Use Better, Use Longer, Use Again” campaign to extend product lifetimes and recyclability.

Environmental Data explained >

How we assess product sustainability >

Environmental footprint

Total lifecycle Carbon footprint	**42 kg CO2 eq.**
Carbon footprint of the manufacturing phase [A1 to A3]	**14 kg CO2 eq.**
Carbon footprint of the distribution phase [A4]	**0 kg CO2 eq.**
Carbon footprint of the installation phase [A5]	**0 kg CO2 eq.**
Carbon footprint of the use phase [B2, B3, B4, B6]	**27 kg CO2 eq.**
Carbon footprint of the end-of-life phase [C1 to C4]	**0.5 kg CO2 eq.**
Environmental Disclosure	**Product Environmental Profile**

Use Better

Materials and Substances

Packaging made with recycled cardboard	**Yes**
Packaging without single use plastic	**Yes**
SCIP Number	**7cc01735-94b8-432b-9a81-f9da4dd7709d**
EU RoHS Directive	**Compliant**
REACh Regulation	**Reference contains Substances of Very High Concern above the threshold**
PVC free	**Yes**

Use Longer

Lifetime extension

Repair	**No**

Use Again

Repack and remanufacture

Recyclability potential, in %	**3**
End of life manual availability	**End of Life Information**
Take-back	**No**
WEEE Label	**The product must be disposed on European Union markets following specific waste collection and never end up in rubbish bins**

Dimensions Drawings

Dimensions

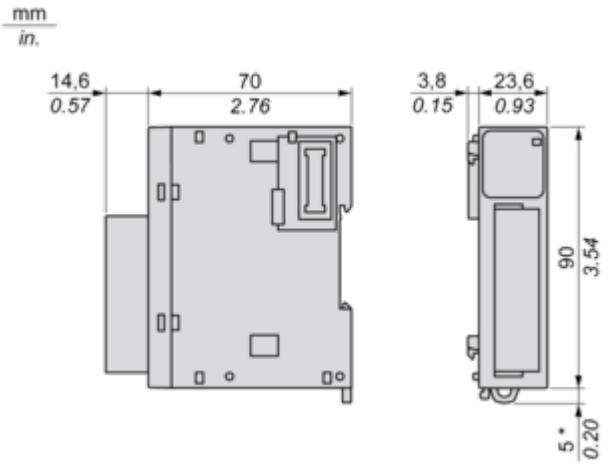

(*) 8.5 mm/0.33 in when the clamp is pulled out.

Mounting and Clearance

Spacing Requirements

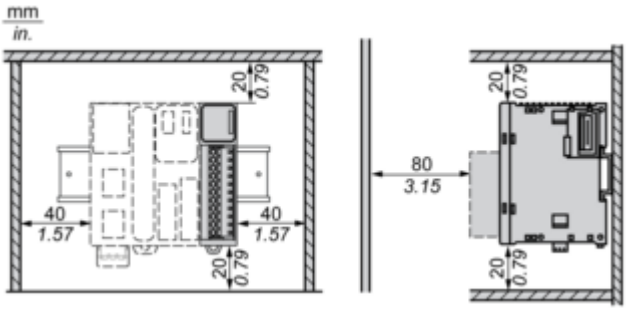

Mounting on a Rail

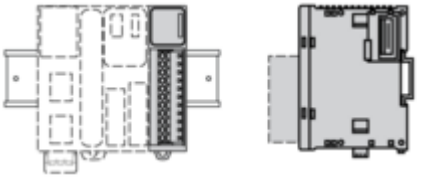

Incorrect Mounting

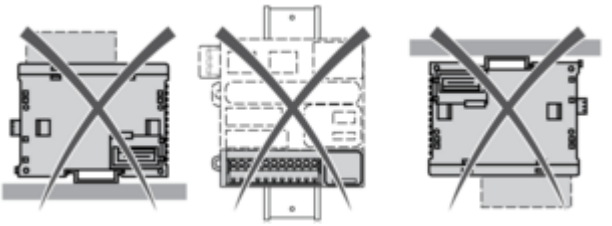

Mounting on a Panel Surface

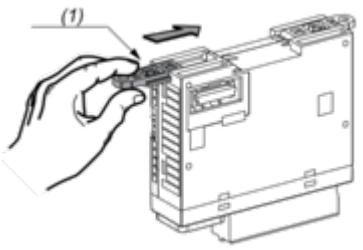

(1) Install a mounting strip

Mounting Hole Layout

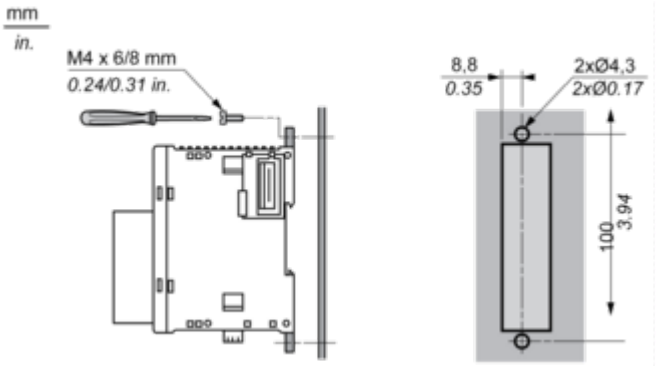

Connections and Schema

Analogue Output Module

Wiring Diagram (Current / Voltage)

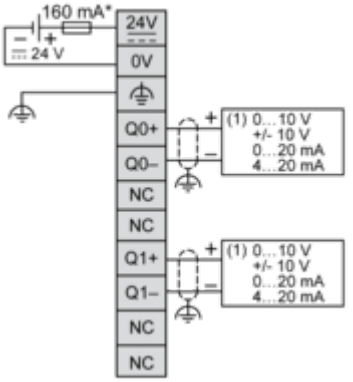

(*) Type T fuse
(1) Voltage/current pre-actuator