Product data sheet

Specifications



analog input module, Modicon TM3, 2 inputs high resolution, screw, 24V DC

TM3AI2H

Product availability: Stock - Normally stocked in distribution facility

Main

Range of Product	Modicon TM3
Product or Component Type	Analog input module
Range Compatibility	Modicon M221 Modicon M241 Modicon M251 Modicon M262
Analogue input number	2

Complementary

Analogue input type	Current 4...20 mA Current 0...20 mA Voltage 0...10 V Voltage - 10...10 V
Analogue input resolution	16 bits 15 bits + sign
Permissible continuous overload	13 V voltage 40 mA current
Input impedance	<= 50 Ohm >= 1 MOhm
Sampling duration	1 ms
Conversion time	1 ms + 1 ms per channel + 1 controller cycle time
Absolute accuracy error	+/- 0.1 % of full scale at 77 °F (25 °C) +/- 1 % of full scale
Repeat accuracy	+/-0.5 %FS
Cross talk	<= 1 LSB
Type of cable	Twisted shielded pairs cable <98.4 ft (30 m) input
Electrical connection	11 x 2.5 mm² removable screw terminal block with pitch 5.08 mm adjustment for inputs and supply
LSB value	0.153 mV, 0...10 V 0.305 mV, - 10...10 V 0.305 µA, 0...20 mA 0.244 µA, 4...20 mA
Insulation	Between input and supply 1500 V AC Between input and internal logic 500 V AC
Immunity to microbreaks	10 ms
Temperature drift	+/- 0.006 %FS/°C
Non-linearity	+/- 0.01 %FS
Typical current consumption	30 mA 5 V DC no load 40 mA 5 V DC full load 25 mA 24 V DC

Price is “List Price” and may be subject to a trade discount – check with your local distributor or retailer for actual price.

Disclaimer: This documentation is not intended as a substitute for and is not to be used for determining suitability or reliability of these products for specific user applications

Local signalling	1 LED green PWR
Mounting support	Top hat type TH35-15 rail IEC 60715 Top hat type TH35-7.5 rail IEC 60715 plate or panel with fixing kit
Height	3.5 in (90 mm)
Width	0.9 in (23.6 mm)
Depth	2.8 in (70 mm)
Net Weight	0.254 lb(US) (0.115 kg)

Environment

IP Degree of Protection	IP20
Marking	CE
Product certifications	CE UKCA RCM EAC CULus CULus HazLoc
Standards	IEC 61131-2
Electromagnetic emission	Radiated emissions 40 dBµV/m QP class A 10 m)30…230 MHz IEC 55011 Radiated emissions 47 dBµV/m QP class A 10 m)230…1000 MHz IEC 55011
Ambient air temperature for operation	14…131 °F (-10…55 °C) horizontal installation) 14…95 °F (-10…35 °C) vertical installation)
Ambient air temperature for storage	-13…158 °F (-25…70 °C)
Relative humidity	10…95 % without condensation
Operating altitude	0...6561.68 ft (0...2000 m)
Pollution degree	2
Vibration resistance	3.5 mm 5…8.4 Hz) on DIN rail 3 gn 8.4…150 Hz) on DIN rail
Shock resistance	15 gn 11 ms

Ordering and shipping details

Category	US10MSX22533
Discount Schedule	0MSX
GTIN	3606480648885
Returnability	Yes
Country of origin	JP

Packing Units

Unit Type of Package 1	PCE
Nbr. of units in pkg.	1
Package 1 Height	2.94 in (7.46 cm)
Package 1 Width	4.191 in (10.645 cm)
Package 1 Length	5.003 in (12.707 cm)
Package weight(Lbs)	7.8 oz (220.0 g)
Unit Type of Package 2	S04

Number of Units in Package 2	42
Package 2 Height	11.8 in (30 cm)
Package 2 Width	15.7 in (40 cm)
Package 2 Length	23.6 in (60 cm)
Package 2 Weight	22.798 lb(US) (10.341 kg)
Unit Type of Package 3	P12
Number of Units in Package 3	504
Package 3 Height	41.3 in (105 cm)
Package 3 Width	47.2 in (120 cm)
Package 3 Length	31.5 in (80 cm)
Package 3 Weight	295.4 lb(US) (134 kg)

Contractual warranty

Warranty (in months)	18

Environmental Data

Schneider Electric aims to achieve Net Zero status by 2050 through supply chain partnerships, lower impact materials, and circularity via our ongoing “Use Better, Use Longer, Use Again” campaign to extend product lifetimes and recyclability.

Environmental Data explained >

How we assess product sustainability >

Environmental footprint

Total lifecycle Carbon footprint	**38 kg CO2 eq.**
Carbon footprint of the manufacturing phase [A1 to A3]	**14 kg CO2 eq.**
Carbon footprint of the distribution phase [A4]	**0 kg CO2 eq.**
Carbon footprint of the installation phase [A5]	**0 kg CO2 eq.**
Carbon footprint of the use phase [B2, B3, B4, B6]	**23 kg CO2 eq.**
Carbon footprint of the end-of-life phase [C1 to C4]	**0.5 kg CO2 eq.**
Environmental Disclosure	**Product Environmental Profile**

Use Better

Materials and Substances

Packaging made with recycled cardboard	**Yes**
Packaging without single use plastic	**Yes**
EU RoHS Directive	**Compliant**
REACh Regulation	**Reference contains Substances of Very High Concern above the threshold**
California proposition 65	**WARNING: This product can expose you to chemicals including: Lead and lead compounds, which is known to the State of California to cause cancer and birth defects or other reproductive harm. For more information go to www.P65Warnings.ca.gov**
PVC free	**Yes**

Use Again

Repack and remanufacture

Recyclability potential, in %	**3**
Circularity Profile	**End of Life Information**
Take-back	**No**
WEEE Label	**The product must be disposed on European Union markets following specific waste collection and never end up in rubbish bins.**

Dimensions Drawings

Dimensions

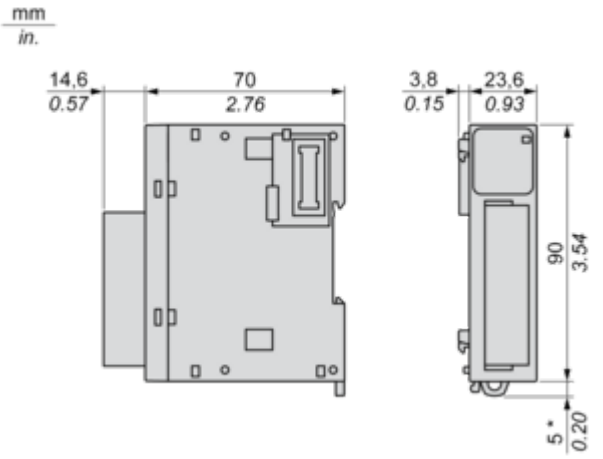

(*) 8.5 mm/0.33 in when the clamp is pulled out.

Mounting and Clearance

Spacing Requirements

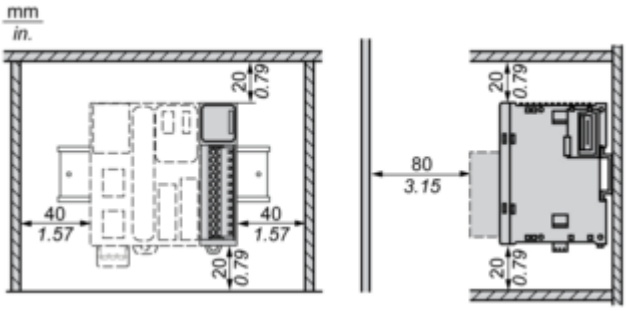

Mounting on a Rail

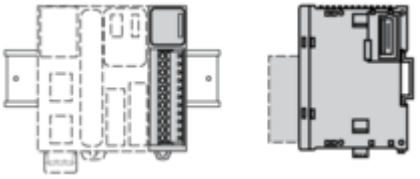

Incorrect Mounting

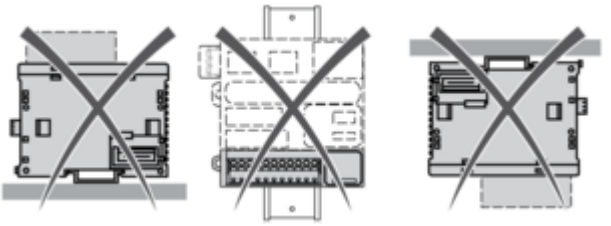

Mounting on a Panel Surface

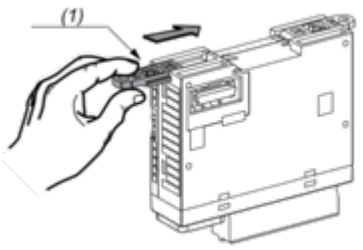

(1) Install a mounting strip

Mounting Hole Layout

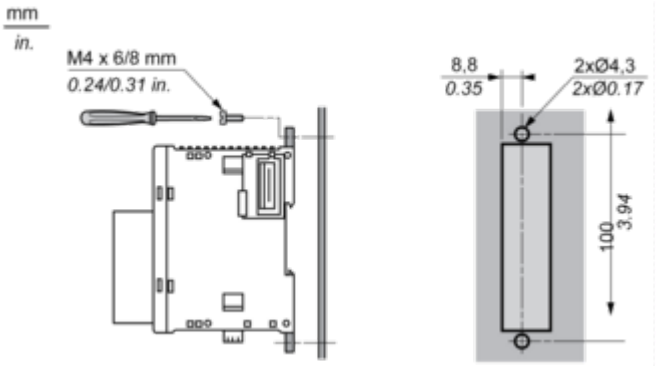

Connections and Schema

Analogue Input Module

Wiring Diagram (Current / Voltage)

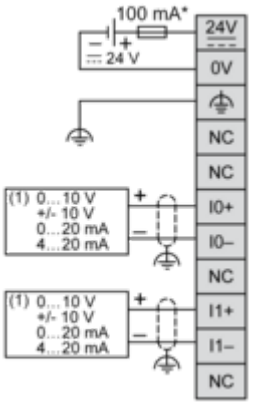

(*) Type T fuse
(1) Current/Voltage analog output device