Product datasheet

Specifications



Modicon M172 Performance Display 28 I/Os, Ethernet, Modbus

TM172PDG28R

Discontinued on: 27 Aug 2026

To be end-of-service on: 30 Jun 2032

To be discontinued

Main

Range of product	Modicon M171/M172
Product or component type	Programmable controllers
Product specific application	HVAC and pumping solution
Variant	Programmable
Total inputs/outputs	28
Discrete input number	8
Discrete output number	1 for relay outputs SPDT with independent common 3 for relay outputs SPST with same common 2 for relay outputs SPST with same common 2 for relay outputs SPST with independent common
Discrete output current	1 A for relay SPDT 3 A for relay SPST
Analogue input number	8 configurable by pair
Analogue output number	2 voltage, range: 0...10 V 2 voltage/current, range: 4...20 mA or 0...10 V or PWM (2 kHz)

Complementary

Number of port	1 CAN port - screw terminal block 1 USB type A - USB type A female 1 USB type mini B - USB device port Mini-B 2 RS485 - screw terminal block (Modbus serial link or BACnet MS/TP) 1 Ethernet - RJ45 (Modbus TCP and BACnet IP with webserver)
Input/output number	8 digital input(s) 8 analog input(s) 4 analog output(s) 8 digital output(s)
Discrete input logic	Sink or source (positive/negative)
Discrete input voltage	24 V AC/DC
Discrete input current	2.5 mA
Input impedance	10 kOhm
Analogue input type	impedance 0...1500 hOhm impedance 0...300 daOhm NTC temperature probe - 50...110 °C - resolution: 0.1 °C (extended) voltage 0...10 V NTC temperature probe - 40...150 °C - resolution: 0.1 °C current 0...20 mA/4...20 mA PTC temperature probe - 55...150 °C - resolution: 0.1 °C voltage 0...5 V (absolute or ratiometric) Pt 1000 temperature probe - 200...850 °C - resolution: 0.1 °C
Sensor power supply	5 V DC at 50 mA supplied by the controller 24 V DC at 150 mA supplied by the controller

Excluding VAT, FCA Jabal Ali & are subject to change – check with your local distributor.

Disclaimer: This documentation is not intended as a substitute for and is not to be used for determining suitability or reliability of these products for specific user applications

[Us] rated supply voltage	24 V +/- 10 % AC 20...38 V DC
Power consumption in W	15 W at 24 V AC/DC
Realtime clock	Built-in clock at -20…60 °C
Display type	Backlit LCD - 128 x 64 pixels
Overvoltage category	II
Local signalling	1 LED (red) for programmable 1 LED (yellow) for programmable 1 LED (green) for programmable 1 LED (green) for power
Mounting support	Panel mounting with accessory DIN rail
Width	144 mm
Height	110 mm
Depth	60.5 mm
Net weight	0.3 kg

Environment

Directives	86/188/EEC - physical agents (noise) directive 2006/95/EC - low voltage directive
Standards	EN/IEC 60730 UL94 (material V0)
Product certifications	EAC CSA CE cURus
Ambient air temperature for operation	-20…60 °C conforming to UL 60730-1 -20…65 °C with derating conforming to UL 60730-1
Ambient air temperature for storage	-30…70 °C
Relative humidity	5…95 % non-condensing
IP degree of protection	IP20
Pollution degree	2
Operating altitude	0...2000 m

Packing Units

Unit Type of Package 1	PCE
Number of Units in Package 1	1
Package 1 Height	13.500 cm
Package 1 Width	9.000 cm
Package 1 Length	18.600 cm
Package 1 Weight	376.000 g
Unit Type of Package 2	S02
Number of Units in Package 2	6
Package 2 Height	15.000 cm
Package 2 Width	30.000 cm
Package 2 Length	40.000 cm

Package 2 Weight	2.404 kg

Contractual warranty

Warranty (in months)	18

Environmental Data

Schneider Electric aims to achieve Net Zero status by 2050 through supply chain partnerships, lower impact materials, and circularity via our ongoing “Use Better, Use Longer, Use Again” campaign to extend product lifetimes and recyclability.

Environmental Data explained >

How we assess product sustainability >

Environmental footprint

Total lifecycle Carbon footprint	**660 kg CO2 eq.**
Carbon footprint of the manufacturing phase [A1 to A3]	**37 kg CO2 eq.**
Carbon footprint of the distribution phase [A4]	**0.2 kg CO2 eq.**
Carbon footprint of the installation phase [A5]	**0 kg CO2 eq.**
Carbon footprint of the use phase [B2, B3, B4, B6]	**622 kg CO2 eq.**
Carbon footprint of the end-of-life phase [C1 to C4]	**1 kg CO2 eq.**
Environmental Disclosure	**Product Environmental Profile**

Use Better

Materials and Substances

Packaging made with recycled cardboard	**Yes**
Packaging without single use plastic	**No**
SCIP Number	**2c365b3a-5b0a-48fd-acc7-751c89a723a2**
EU RoHS Directive	**Compliant By Exemption**
REACh Regulation	**Reference contains Substances of Very High Concern above the threshold**

Use Longer

Lifetime extension

Updatability	**Yes**

Use Again

Repack and remanufacture

Recyclability potential, in %	**0**
End of life manual availability	**End of Life Information**
Removable battery	**Yes**
Take-back	**No**
WEEE Label	**The product must be disposed on European Union markets following specific waste collection and never end up in rubbish bins**

Dimensions Drawings

Dimensions

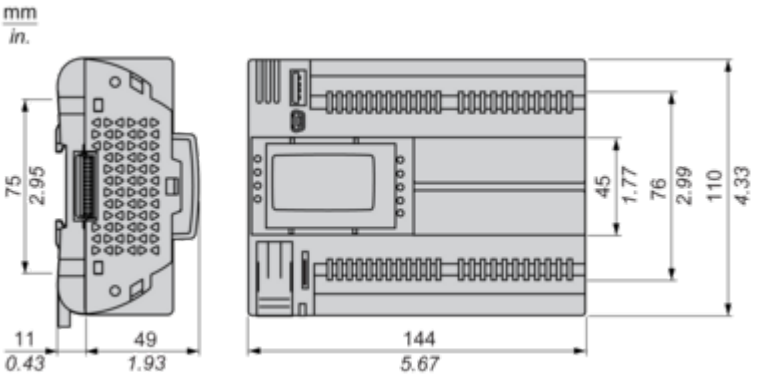

Mounting and Clearance

Mounting Positions

Correct Mounting Position

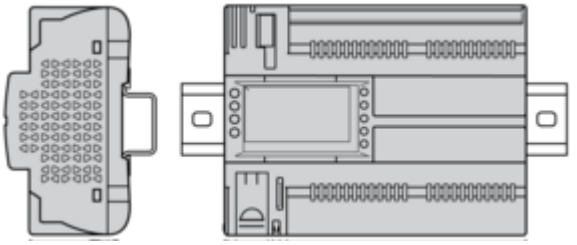

Acceptable Mounting Position

Controller can be mounted horizontally upward with a temperature derating (maximum ambient temperature: 60 °C (140 °F)).

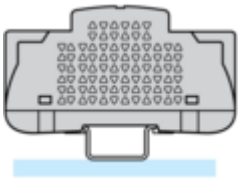

Incorrect Mounting Position

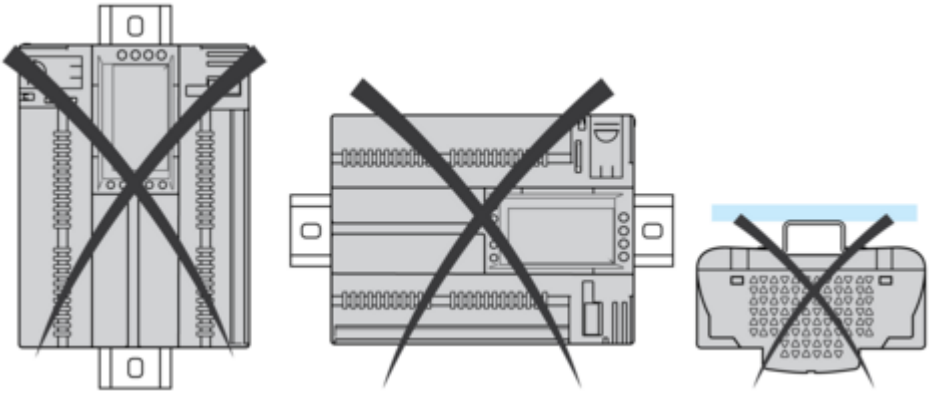

Clearance

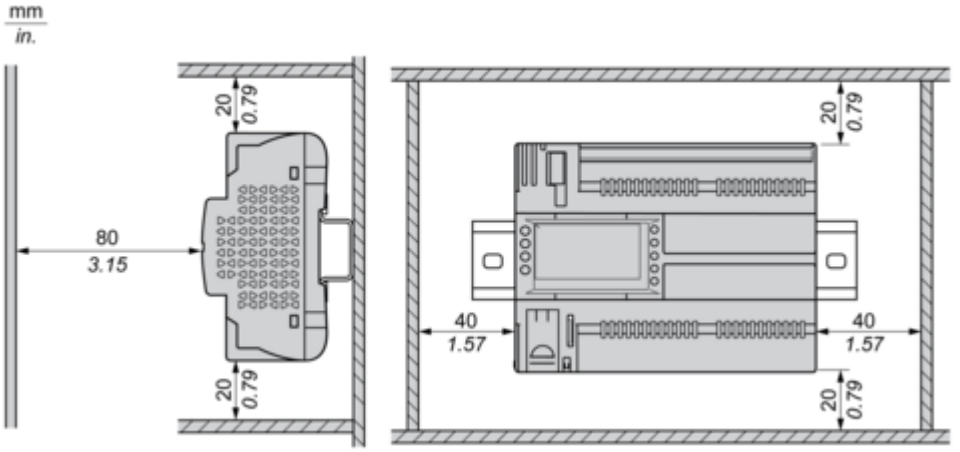

Connections and Schema

Power Supply

24 Vac	24 Vdc
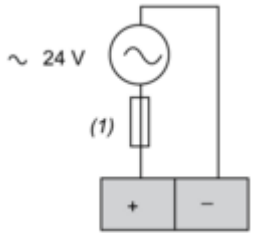	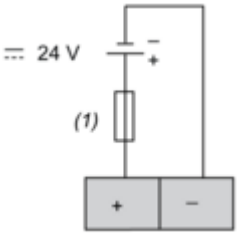
(1) Type T fuse 2 A	

CN3 Fast Digital Inputs

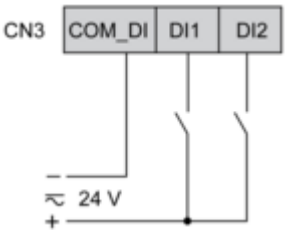

CN4 Digital Inputs

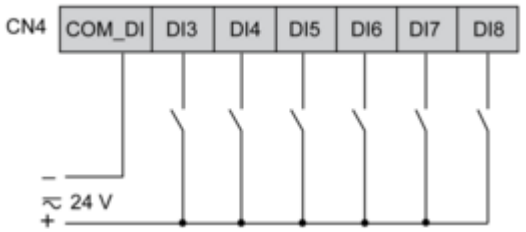

CN7, CN8, CN9, CN6 High Voltage Relay SPST Digital Output

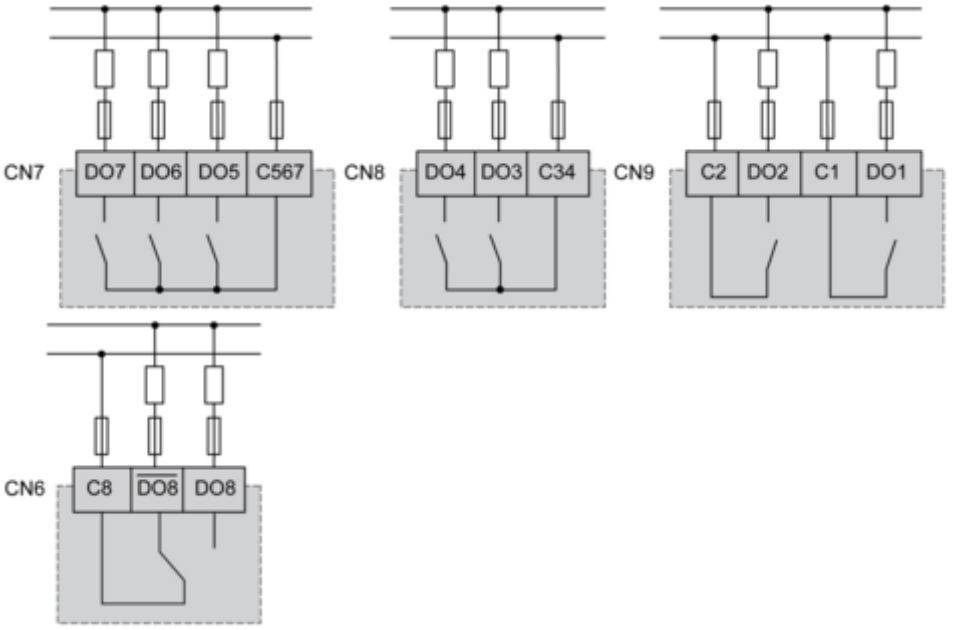

CN5 Analog Inputs

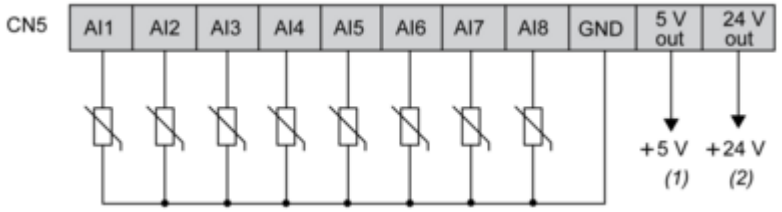

(1) Max. current : 50 mA.
(2) Max. current : 150 mA.

CN2 Analog Outputs

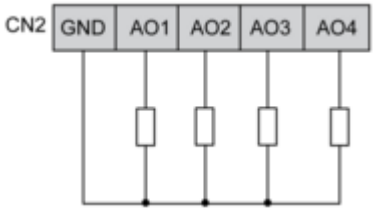

AO3, AO4 can be used also as PWM generator, up to 2kHz.

CN18 CAN Expansion Bus Port

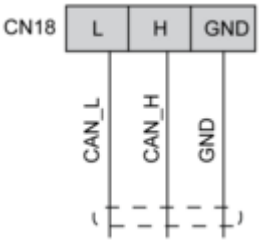

CN19, CN1 CAN Expansion Bus Port

