Product datasheet

Specifications



Controller, Modicon M171/M172/ M173, performance, blind, 18 IO, Ethernet, Modbus

TM172PBG18R

Main

Range of product	Modicon M171/M172
Product or component type	Programmable controllers
Product specific application	HVAC
Variant	Programmable
Total inputs/outputs	18
Discrete input number	2
Discrete output number	1 for relay outputs SPDT with independent common 2 for relay outputs SPST with same common 3 for relay outputs SPST with independent common
Discrete output current	3 A for relay SPST 3 A for relay SPDT
Analogue input number	8 configurable by pair
Analogue output number	2 voltage/current, range: 4...20 mA or 0...10 V or PWM (2 kHz)

Complementary

Number of port	1 CAN port - screw terminal block 1 USB type A - USB type A female 1 USB type mini B - USB device port Mini-B 2 RS485 - screw terminal block (Modbus serial link or BACnet MS/TP) 1 Ethernet - RJ45 (Modbus TCP and BACnet IP with webserver)
Input/output number	2 analog output(s) 6 digital output(s) 8 analog input(s) 2 digital input(s)
Discrete input logic	Sink or source (positive/negative) up to 2 kHz
Discrete input voltage	24 V AC/DC
Discrete input current	5 mA AC/DC
Input impedance	10 kOhm
Analogue input type	NTC NK103 Beta 3977 temperature probe - 40...137 °C - resolution: 0.1 °C at 10 kOhm (at 25 °C) NTC 103AT-2 Beta 3435 temperature probe - 50...110 °C - resolution: 0.1 °C at 10 kOhm (at 25 °C) voltage 0...10 V - resolution: 1 digit at > 10 kOhm voltage 0...5 V - resolution: 1 digit at > 20 kOhm (absolute or ratiometric) impedance 0...1500 hOhm - resolution: 1 hOhm at 10 kOhm impedance 0...300 daOhm - resolution: 1 daOhm at 1500 Ohm PTC temperature probe - 55...150 °C - resolution: 0.1 °C at 1500 Ohm Pt 1000 temperature probe - 200...850 °C - resolution: 0.1 °C at 1500 Ohm current 0...20 mA/4...20 mA - resolution: 1 digit at < 150 Ohm direct input at 10 kOhm (Dry contact)

Excluding VAT, FCA Jabal Ali & are subject to change – check with your local distributor.

Disclaimer: This documentation is not intended as a substitute for and is not to be used for determining suitability or reliability of these products for specific user applications

Measurement accuracy	0...20 mA 0...4 mA +/- 2 % of full scale +/- 1 digit 0...20 mA 4...20 mA +/- 1 % of full scale +/- 1 digit 4...20 mA +/- 1 % of full scale +/- 1 digit 0...10 V +/- 1 % of full scale +/- 1 digit 0...5 V +/- 1 % of full scale +/- 1 digit DaOhm 0...300 daOhm +/- 2.5 daOhm NTC NK103 Beta 3977 - 40...+110 °C +/- 1 °C NTC NK103 Beta 3977 110...137 °C +/- 1.9 °C NTC 103AT-2 Beta 3435 - 50…110 °C +/- 1 °C PTC - 55...155 °C +/- 1.1 °C Pt 1000 - 200...-100 °C +/- 10 °C Pt 1000 - 100...-50 °C +/- 2.5 °C Pt 1000 - 50...100 °C +/- 1.5 °C Pt 1000 100…400 °C +/- 2.4 °C Pt 1000 400...850 °C +/- 10 °C HOhm 0...750 hOhm +/- 8.5 hOhm HOhm 750 hOhm...1500 hOhm +/- 24 hOhm
Sensor power supply	5 V DC at 40 mA supplied by the controller 24 V DC at 100 mA supplied by the controller
[Us] rated supply voltage	24 V +/- 10 % AC 20...38 V DC
Power consumption in W	11 W at 24 V AC/DC
Realtime clock	Built-in clock, clock drift <= 30 s/month at -20…60 °C
Display type	Without display
Overvoltage category	II
Local signalling	1 LED (red) for programmable 1 LED (yellow) for programmable 1 LED (green) for programmable 1 LED (green) for power
Mounting support	Panel mounting with accessory DIN rail
Width	72 mm
Height	110 mm
Depth	60.5 mm
Net weight	0.2 kg

Environment

Directives	2014/35/EU - low voltage directive 2014/30/EU - electromagnetic compatibility
Standards	IEC 61000-4-5 IEC 61000-4-3 IEC 61000-4-2 EN 60068-2-27 EN 60730-1 EN 60068-2-6 Fc UL 60730-1 UL 60730-2-9 IEC 61000-4-4 CAN/CSA-E60730-1 IEC 61000-4-11 IEC 61000-4-6 CSA E60730-2-9 EN 60730-2-9 UL94 (material V0)
Product certifications	CSA EAC RCM CE cURus
Ambient air temperature for operation	-20…60 °C
Ambient air temperature for storage	-30…70 °C

Relative humidity	5…95 % non-condensing
IP degree of protection	IP20
Pollution degree	2
Operating altitude	0...2000 m

Packing Units

Unit Type of Package 1	PCE
Number of Units in Package 1	1
Package 1 Height	7.000 cm
Package 1 Width	9.200 cm
Package 1 Length	13.200 cm
Package 1 Weight	236.000 g
Unit Type of Package 2	S02
Number of Units in Package 2	15
Package 2 Height	15.000 cm
Package 2 Width	30.000 cm
Package 2 Length	40.000 cm
Package 2 Weight	3.822 kg

Contractual warranty

Warranty (in months)	18

Environmental Data

Schneider Electric aims to achieve Net Zero status by 2050 through supply chain partnerships, lower impact materials, and circularity via our ongoing “Use Better, Use Longer, Use Again” campaign to extend product lifetimes and recyclability.

Environmental Data explained >

How we assess product sustainability >

Environmental footprint

Total lifecycle Carbon footprint	**486 kg CO2 eq.**
Carbon footprint of the manufacturing phase [A1 to A3]	**30 kg CO2 eq.**
Carbon footprint of the distribution phase [A4]	**0.1 kg CO2 eq.**
Carbon footprint of the installation phase [A5]	**0 kg CO2 eq.**
Carbon footprint of the use phase [B2, B3, B4, B6]	**456 kg CO2 eq.**
Carbon footprint of the end-of-life phase [C1 to C4]	**0.6 kg CO2 eq.**
Environmental Disclosure	Product Environmental Profile

Use Better

Materials and Substances

Packaging made with recycled cardboard	**Yes**
SCIP Number	**135627b5-3fcc-46b5-b09e-bf9930b8fb6f**
EU RoHS Directive	Compliant By Exemption
REACh Regulation	Reference contains Substances of Very High Concern above the threshold

Use Longer

Lifetime extension

Updatability	**Yes**

Use Again

Repack and remanufacture

Recyclability potential, in %	**0**
End of life manual availability	End of Life Information
Removable battery	**Yes**
Take-back	**No**
WEEE Label	**The product must be disposed on European Union markets following specific waste collection and never end up in rubbish bins**

Dimensions Drawings

Dimensions Drawings

Dimensions

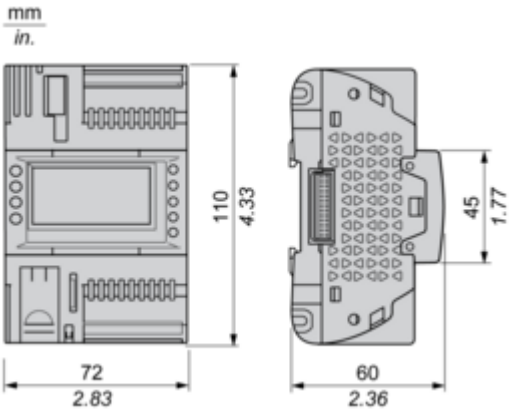

Mounting and Clearance

Mounting Positions

Correct Mounting Position

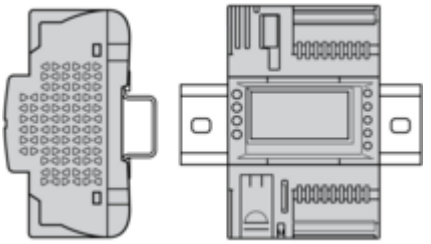

Incorrect Mounting Position

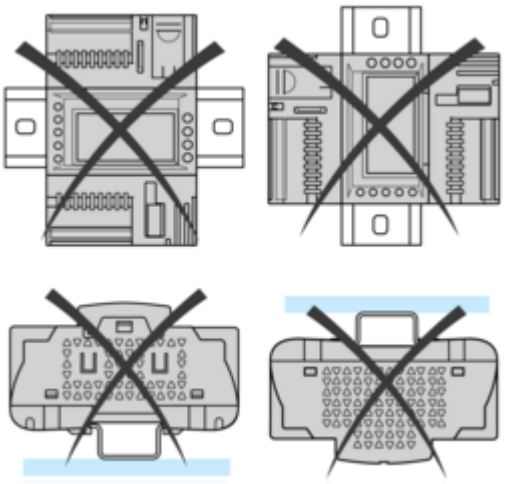

Clearance

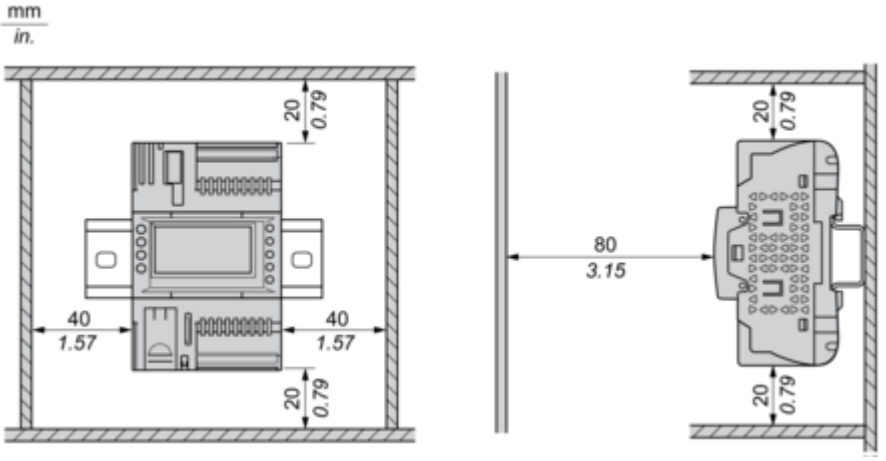

Connections and Schema

Power Supply

24 Vac	24 Vdc
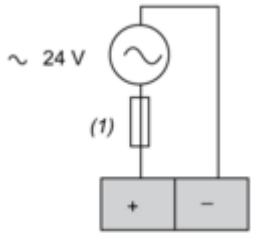	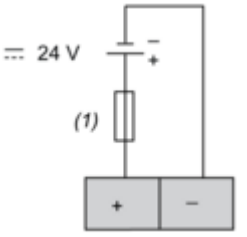
(1) Type T fuse 2 A	

CN3 Fast Digital Inputs

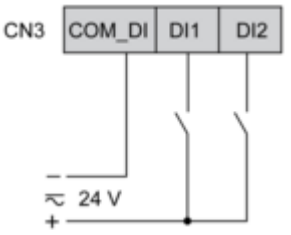

CN9, CN15, CN6 High Voltage Relay SPST Digital Output

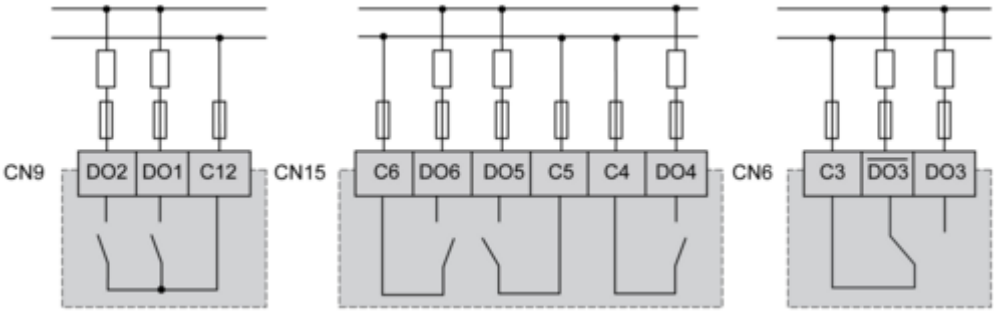

CN5, CN13 Analog Inputs

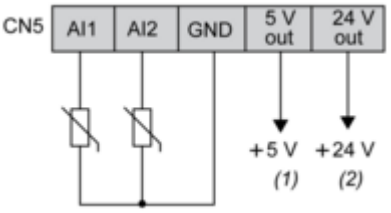

(1) Max. current : 40 mA.
(2) Max. current : 100 mA.

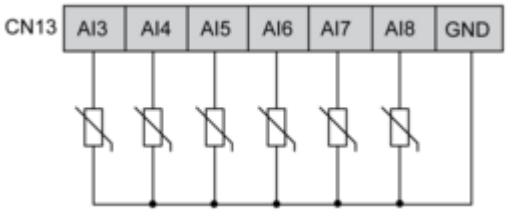

CN11 Analog Outputs

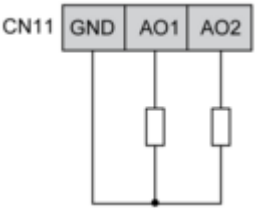

AO1, AO2 can be used also as PWM generator, up to 2kHz.

CN18 CAN Expansion Bus Port

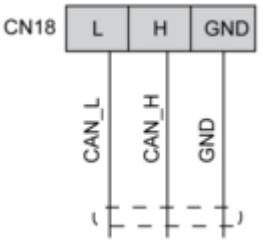

CN19, CN1 RS485 Bus Port

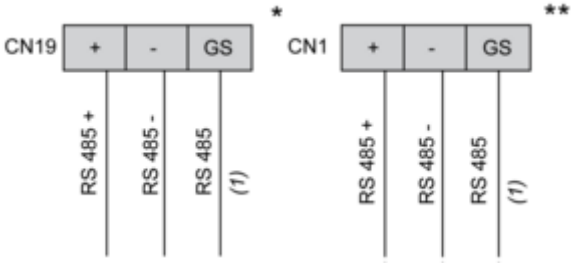

(1) Signal reference
* RS485-1 Modbus SL
** RS485-2 Modbus SL or BACnet MS/TP