# Product datasheet

Specifications




## analogue I/O extension module - 4 I O - 24 V DC - for Zelio Logic

SR3XT43BD

## Main

| | |
|---|---|
| **Range of product** | Zelio Logic |
| **Product or component type** | Analogue I/O extension module |

## Complementary

| | |
|---|---|
| **Analogue input number** | 2 |
| **Analogue input type** | Common mode |
| **Analogue input range** | 0...10 V<br>0...20 mA<br>-25...125 °C |
| **Temperature probe type** | Pt 100, 3-wire conforming to IEC 751 |
| **Maximum permissible voltage** | 30 V for analogue input circuit |
| **[Imp] maximum permanent current** | 30 mA for analogue input circuit |
| **Analogue input resolution** | 10 bits on the input range |
| **Input impedance** | 18 kOhm, input range: 0...10 V for analogue input circuit<br>247 Ohm, input range: 0...20 mA for analogue input circuit |
| **Analogue output number** | 2 |
| **Analogue output range** | 0...10 V |
| **Analogue output resolution** | 10 bits on the output range |
| **Load type** | Resistive load for analogue output |
| **Maximum load current** | 10 mA for analogue output |
| **Short-circuit protection** | With analogue output |
| **LSB value** | 0.15 °C, - 25...125 °C for analogue input circuit<br>20 µA, 0...20 mA for analogue input circuit<br>9.8 mV, 0...10 V for analogue input circuit<br>9.8 mV, 0...10 V for analogue output |
| **Conversion time** | Smart relay cycle time for analogue input circuit<br>Smart relay cycle time for analogue output |
| **Conversion error** | +/- 1 % of the full scale value, input range: 0...10 V (25 °C) for analogue output<br>+/- 1 % of the full scale value, input range: 0...10 V (55 °C) for analogue output<br>+/- 1 %, input range: 0...10 V (25 °C) for analogue input circuit<br>+/- 1 %, input range: 0...10 V (55 °C) for analogue input circuit<br>+/- 1 %, input range: 0...20 mA (25 °C) for analogue input circuit<br>+/- 1 %, input range: 0...20 mA (55 °C) for analogue input circuit<br>+/- 1.5 °C, input range: - 25...125 °C (25 °C) for analogue input circuit<br>+/- 1.5 °C, input range: - 25...125 °C (55 °C) for analogue input circuit |
| **Repeat accuracy** | < +/- 0.3 °C, input range: - 25...125 °C at 25 °C for analogue input circuit<br><= +/- 1 %, input range: 0...10 V at 25 °C for analogue input circuit<br><= +/- 1 %, input range: 0...10 V at 55 °C for analogue output<br><= +/- 1 %, input range: 0...20 mA at 25 °C for analogue input circuit |

Excluding VAT, FCA Jabal Ali & are subject to change – check with your local distributor.

Disclaimer: This documentation is not intended as a substitute for and is not to be used for determining suitability or reliability of these products for specific user applications

| | |
|---|---|
| **Operating distance** | 10 m with screened cable for analogue input circuit<br>10 m with screened cable for analogue output |
| **Reverse polarity protection** | Analogue input circuit: with |
| **Connections - terminals** | Screw terminals, 1 x 0.25...1 x 2.5 mm² (24 AWG...14 AWG) semi-solid<br>Screw terminals, 1 x 0.25...1 x 2.5 mm² (24 AWG...14 AWG) solid<br>Screw terminals, 2 x 0.25...2 x 1.5 mm² (23 AWG...16 AWG) solid<br>Screw terminals, 1 x 0.25...1 x 2.5 mm² (24 AWG...14 AWG) flexible with cable end<br>Screw terminals, 2 x 0.25...2 x 0.75 mm² (24 AWG...18 AWG) flexible with cable end |
| **Tightening torque** | 0.5 N.m |
| **Net weight** | 0.11 kg |

## Environment

| | |
|---|---|
| **Product certifications** | GOST<br>UL<br>C-Tick<br>CSA |
| **Standards** | IEC 61000-4-12<br>IEC 61000-4-5<br>IEC 61000-4-3<br>IEC 61000-4-4 level 3<br>IEC 61000-4-6 level 3<br>IEC 61000-4-2 level 3<br>IEC 60068-2-6 Fc<br>IEC 61000-4-11<br>IEC 60068-2-27 Ea |
| **IP degree of protection** | IP20 (terminal block) conforming to IEC 60529<br>IP40 (front panel) conforming to IEC 60529 |
| **Environmental characteristic** | EMC directive conforming to IEC 61000-6-2<br>EMC directive conforming to IEC 61000-6-3<br>EMC directive conforming to IEC 61000-6-4<br>EMC directive conforming to IEC 61131-2 zone B<br>Low voltage directive conforming to IEC 61131-2 |
| **Disturbance radiated/conducted** | Class B conforming to IEC 55022-11 Group 1 |
| **Pollution degree** | 2 conforming to IEC 61131-2 |
| **Ambient air temperature for operation** | -20…40 °C conforming to IEC 60068-2-1 and IEC 60068-2-2<br>-20…55 °C conforming to IEC 60068-2-1 and IEC 60068-2-2 |
| **Ambient air temperature for storage** | -40…70 °C |
| **Operating altitude** | 2000 m |
| **Maximum altitude transport** | 3048 m |
| **Relative humidity** | 95 % without condensation or dripping water |

## Packing Units

| | |
|---|---|
| **Unit Type of Package 1** | PCE |
| **Number of Units in Package 1** | 1 |
| **Package 1 Height** | 6.000 cm |
| **Package 1 Width** | 6.500 cm |
| **Package 1 Length** | 11.000 cm |
| **Package 1 Weight** | 105.000 g |
| **Unit Type of Package 2** | S03 |
| **Number of Units in Package 2** | 48 |
| **Package 2 Height** | 30.000 cm |
| **Package 2 Width** | 30.000 cm |

| | |
|---|---|
| **Package 2 Length** | 40.000 cm |
| **Package 2 Weight** | 5.516 kg |

## Contractual warranty

| | |
|---|---|
| **Warranty (in months)** | 18 |

## Environmental Data

Schneider Electric aims to achieve Net Zero status by 2050 through supply chain partnerships, lower impact materials, and circularity via our ongoing “Use Better, Use Longer, Use Again” campaign to extend product lifetimes and recyclability.

Environmental Data explained >

How we assess product sustainability >

### Environmental footprint

| | |
|---|---|
| Total lifecycle Carbon footprint | **153 kg CO2 eq.** |
| Carbon footprint of the manufacturing phase [A1 to A3] | **1 kg CO2 eq.** |
| Carbon footprint of the distribution phase [A4] | **0 kg CO2 eq.** |
| Carbon footprint of the installation phase [A5] | **0 kg CO2 eq.** |
| Carbon footprint of the use phase [B2, B3, B4, B6] | **152 kg CO2 eq.** |
| Carbon footprint of the end-of-life phase [C1 to C4] | **0.2 kg CO2 eq.** |
| Environmental Disclosure | **Product Environmental Profile** |

## Use Better

### Materials and Substances

| | |
|---|---|
| Packaging made with recycled cardboard | **Yes** |
| Packaging without single use plastic | **Yes** |
| SCIP Number | **Ab7a5df6-4d23-4fb1-96de-7c15d64130aa** |
| EU RoHS Directive | **Compliant By Exemption** |
| REACh Regulation | **Reference contains Substances of Very High Concern above the threshold** |
| PVC free | **Yes** |

## Use Again

### Repack and remanufacture

| | |
|---|---|
| Recyclability potential, in % | **10** |
| End of life manual availability | **End of Life Information** |
| Take-back | **No** |
| WEEE Label | **The product must be disposed on European Union markets following specific waste collection and never end up in rubbish bins** |

Dimensions Drawings

## Analog I/O Extension Modules

### Mounting on 35 mm/1.38 in. DIN Rail

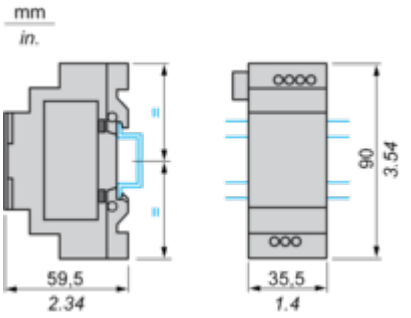


### Screw Fixing (Retractable Lugs)

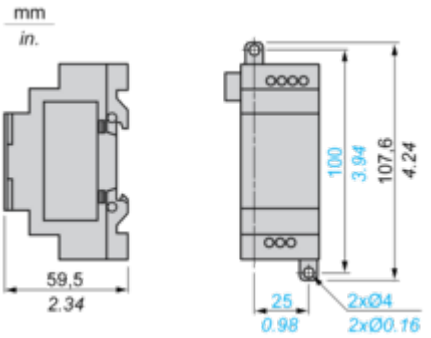

## Connections and Schema

### Connection of Smart Relays on DC Supply, with Analog I/O Extension Module

**Connection Alternatives**

| 0 - 10 V | 0 - 20 mA | Pt100 |
|---|---|---|
| 2 | 0 | 0 |
| 1 | 1 | 0 |
| 0 | 2 | 0 |
| 1 | 0 | 1 |
| 0 | 1 | 1 |

**Application Example with 1 x 0 - 10 V Input and 1 x Pt100 Input**

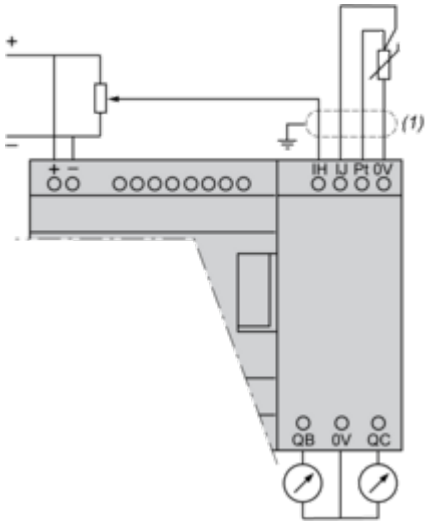


**(1)** Screened cables, maximum length 10 m/32.80 ft.

**Application Example with 1 x 0 - 20 mA Input and 1 x 0 - 10 V Input**

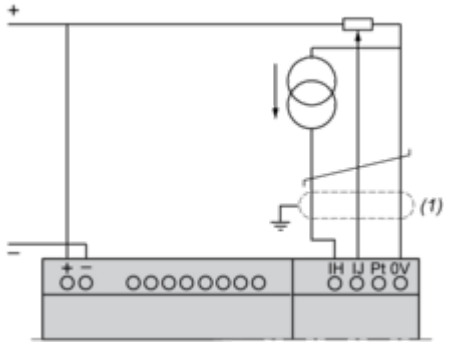


**(1)** Screened cables, maximum length 10 m/32.80 ft.

## Performance Curves

### Compact and Modular Smart Relays

### Electrical Durability of Relay Outputs

(in millions of operating cycles, conforming to IEC/EN 60947-5-1)
DC-12 (1)

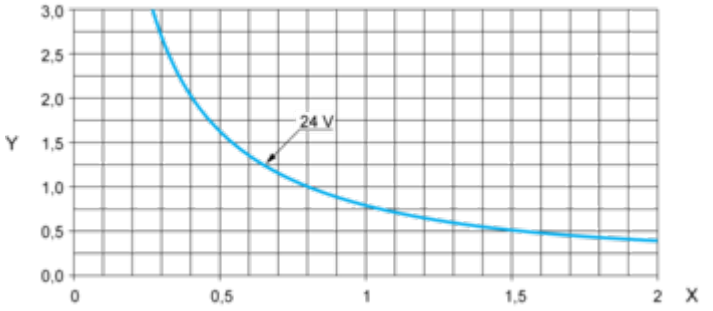


**X:** Current (A)
**Y:** Millions of operating cycles
**(1)** DC-12: control of resistive loads and of solid state loads isolated by opto-coupler, L/R ≤ 1 ms.

DC-13 (1)

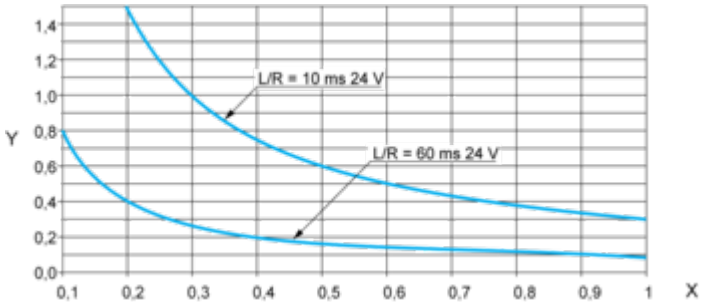


**X:** Current (A)
**Y:** Millions of operating cycles
**(1)** DC-13: switching electromagnets, L/R ≤ 2 x (Ue x Ie) in ms, Ue: rated operational voltage, Ie: rated operational current (with a protection diode on the load, DC-12 curves must be used with a coefficient of 0.9 applied to the number in millions of operating cycles).

Image of product / Alternate images

**Alternative**









Analog Inputs
SR3 XT43BD
Analog Outputs
QB...QC : 0 - 10V