Product datasheet

Specifications

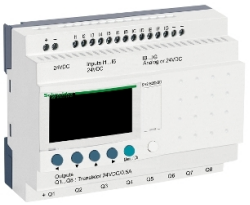

Compact smart relay, Zelio Logic, 20 I/O, 24 V DC, clock, display

SR2B202BD

Main

Range of product	Zelio Logic
Product or component type	Compact smart relay

Complementary

Local display	With
Number or control scheme lines	0…240 with ladder programming 0…500 with FBD programming
Cycle time	6…90 ms
Backup time	10 years at 25 °C
Clock drift	12 min/year at 0…55 °C 6 s/month at 25 °C
Checks	Program memory on each power up
[Us] rated supply voltage	24 V DC
Supply voltage limits	19.2…30 V
Maximum supply current	100 mA (without extension)
Power dissipation in W	3 W without extension
Reverse polarity protection	With
Discrete input number	12 conforming to IEC 61131-2 Type 1
Discrete input type	Resistive
Discrete input voltage	24 V DC
Discrete input current	4 mA
Counting frequency	1 kHz for discrete input
Voltage state 1 guaranteed	>= 15 V for I1...IA and IH...IR discrete input circuit >= 15 V for IB...IG used as discrete input circuit
Voltage state 0 guaranteed	<= 5 V for I1...IA and IH...IR discrete input circuit <= 5 V for IB...IG used as discrete input circuit
Current state 1 guaranteed	>= 1.2 mA (IB...IG used as discrete input circuit) >= 2.2 mA (I1...IA and IH...IR discrete input circuit)
Current state 0 guaranteed	<= 0.5 mA (IB...IG used as discrete input circuit) <= 0.75 mA (I1...IA and IH...IR discrete input circuit)
Input compatibility	3-wire proximity sensors PNP for discrete input
Analogue input number	6
Analogue input type	Common mode
Analogue input range	0...10 V 0...24 V

Excluding VAT, FCA Jabal Ali & are subject to change – check with your local distributor.

Disclaimer: This documentation is not intended as a substitute for and is not to be used for determining suitability or reliability of these products for specific user applications

Temperature probe type	NTC 10k at 25 °C NTC 1000k at 25 °C KTY81 210/220/221/222/250 Pt 500
Maximum permissible voltage	30 V for analogue input circuit
Analogue input resolution	8 bits
LSB value	39 mV for analogue input circuit
Conversion time	Smart relay cycle time for analogue input circuit
Conversion error	+/- 5 % at 25 °C for analogue input circuit +/- 6.2 % at 55 °C for analogue input circuit
Repeat accuracy	+/- 2 % at 55 °C for analogue input circuit
Operating distance	10 m between stations, with screened cable (sensor not isolated) for analogue input circuit
Input impedance	12 kOhm for IB...IG used as analogue input circuit 12 kOhm for IB...IG used as discrete input circuit 7.4 kOhm for I1...IA and IH...IR discrete input circuit
Number of outputs	8 transistor
Output voltage	24 V transistor output
Output voltage limits	19.2...30 V DC (transistor output)
Load current	0.5…0.625 A transistor output
[Ures] residual voltage	2 V at state 1 transistor output
Overload protection	With overload protection for transistor output
Short-circuit protection	With transistor output
Overvoltage protection	With overvoltage protection for transistor output
Clock	With
Response time	<= 1 ms (from state 0 to state 1) for transistor output <= 1 ms (from state 1 to state 0) for transistor output
Connections - terminals	Screw terminals, 1 x 0.2...1 x 2.5 mm² (25 AWG...14 AWG) semi-solid Screw terminals, 1 x 0.2...1 x 2.5 mm² (25 AWG...14 AWG) solid Screw terminals, 1 x 0.25...1 x 2.5 mm² (24 AWG...14 AWG) flexible with cable end Screw terminals, 2 x 0.2...2 x 1.5 mm² (24 AWG...16 AWG) solid Screw terminals, 2 x 0.25...2 x 0.75 mm² (24 AWG...18 AWG) flexible with cable end
Tightening torque	0.5 N.m
Overvoltage category	III conforming to IEC 60664-1
Net weight	0.28 kg

Environment

Immunity to microbreaks	1 ms
Product certifications	CSA UL GOST GL C-Tick
Standards	IEC 61000-4-4 level 3 IEC 60068-2-27 Ea IEC 61000-4-5 IEC 61000-4-6 level 3 IEC 61000-4-11 IEC 61000-4-2 level 3 IEC 61000-4-3 IEC 61000-4-12 IEC 60068-2-6 Fc

IP degree of protection	IP20 (terminal block) conforming to IEC 60529 IP40 (front panel) conforming to IEC 60529
Environmental characteristic	EMC directive conforming to IEC 61000-6-2 EMC directive conforming to IEC 61000-6-3 EMC directive conforming to IEC 61000-6-4 EMC directive conforming to IEC 61131-2 zone B Low voltage directive conforming to IEC 61131-2
Disturbance radiated/conducted	Class B conforming to EN 55022-11 group 1
Pollution degree	2 conforming to IEC 61131-2
Ambient air temperature for operation	-20…40 °C in non-ventilated enclosure conforming to IEC 60068-2-1 and IEC 60068-2-2 -20…55 °C conforming to IEC 60068-2-1 and IEC 60068-2-2
Ambient air temperature for storage	-40…70 °C
Operating altitude	2000 m
Maximum altitude transport	3048 m
Relative humidity	95 % without condensation or dripping water

Packing Units

Unit Type of Package 1	PCE
Number of Units in Package 1	1
Package 1 Height	6.600 cm
Package 1 Width	10.000 cm
Package 1 Length	13.300 cm
Package 1 Weight	294.000 g
Unit Type of Package 2	S03
Number of Units in Package 2	20
Package 2 Height	30.000 cm
Package 2 Width	30.000 cm
Package 2 Length	40.000 cm
Package 2 Weight	6.370 kg

Contractual warranty

Warranty (in months)	18

Environmental Data

Schneider Electric aims to achieve Net Zero status by 2050 through supply chain partnerships, lower impact materials, and circularity via our ongoing “Use Better, Use Longer, Use Again” campaign to extend product lifetimes and recyclability.

Environmental Data explained >

How we assess product sustainability >

Environmental footprint

Total lifecycle Carbon footprint	**115 kg CO2 eq.**
Carbon footprint of the manufacturing phase [A1 to A3]	**35 kg CO2 eq.**
Carbon footprint of the distribution phase [A4]	**0.6 kg CO2 eq.**
Carbon footprint of the installation phase [A5]	**0.1 kg CO2 eq.**
Carbon footprint of the use phase [B2, B3, B4, B6]	**78 kg CO2 eq.**
Carbon footprint of the end-of-life phase [C1 to C4]	**0.7 kg CO2 eq.**
Environmental Disclosure	**Product Environmental Profile**

Use Better

Materials and Substances

Packaging made with recycled cardboard	**Yes**
Packaging without single use plastic	**Yes**
SCIP Number	**Eee2fc35-1620-4b70-b1d5-206e9240044e**
EU RoHS Directive	**Compliant By Exemption**
REACh Regulation	**Reference contains Substances of Very High Concern above the threshold**
PVC free	**Yes**

Use Longer

Lifetime extension

Repair	**No**

Use Again

Repack and remanufacture

Recyclability potential, in %	**0**
End of life manual availability	**End of Life Information**
Take-back	**No**
WEEE Label	**The product must be disposed on European Union markets following specific waste collection and never end up in rubbish bins**

Dimensions Drawings

Compact and Modular Smart Relays

Mounting on 35 mm/1.38 in. DIN Rail

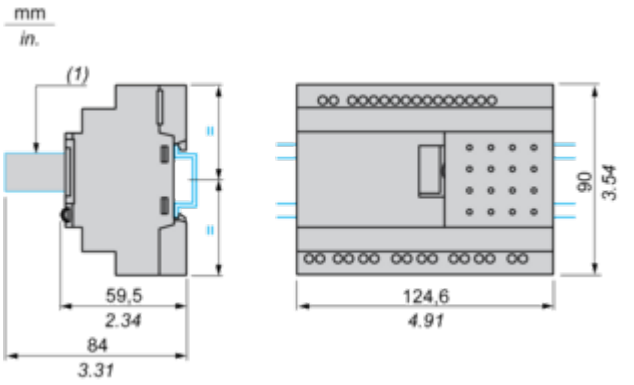

(1) With SR2USB01 or SR2BTC01

Screw Fixing (Retractable Lugs)

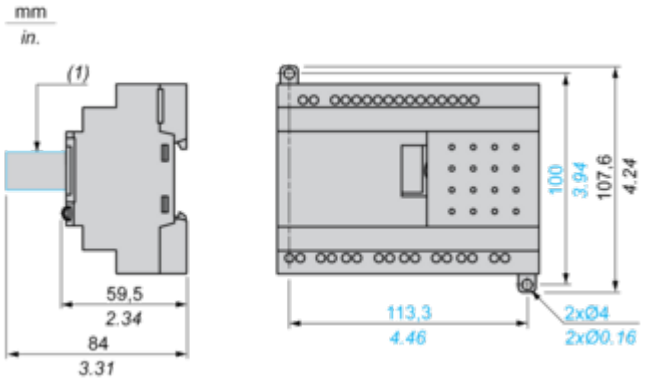

(1) With SR2USB01 or SR2BTC01

Position of Display

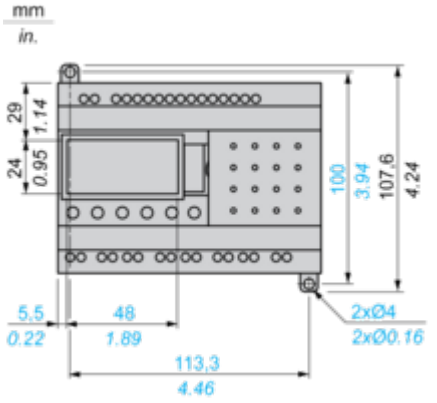

Connections and Schema

Compact and Modular Smart Relays

Connection of Smart Relays on DC Supply

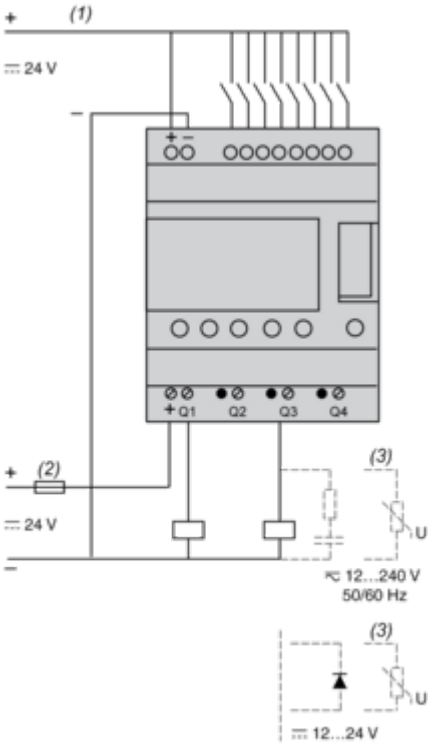

(1) 1 A quick-blow fuse or circuit-breaker.
(2) Fuse or circuit-breaker.
(3) Inductive load.
(4) Q9 and QA: 5 A (max. current in terminal C: 10 A).

Discrete Input Used for 3-Wire Sensors

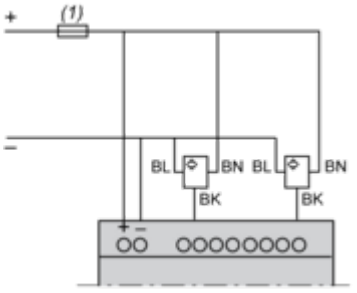

(1) 1 A quick-blow fuse or circuit-breaker.

Connection of Thermistor Input on DC Supply

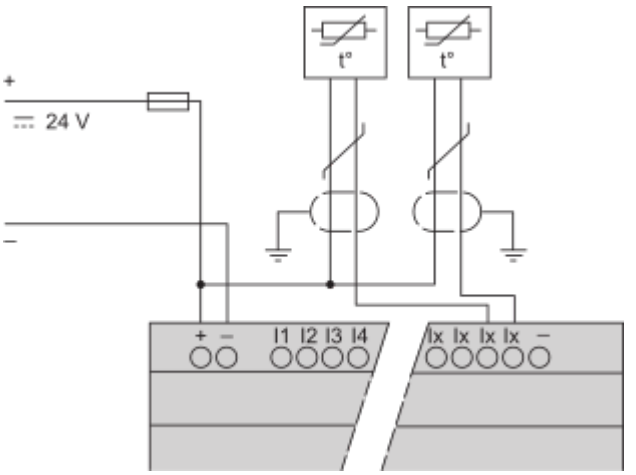

NOTE: Ix = IB...IG

Performance Curves

Compact and Modular Smart Relays

Electrical Durability of Relay Outputs

(in millions of operating cycles, conforming to IEC/EN 60947-5-1)
DC-12 (1)

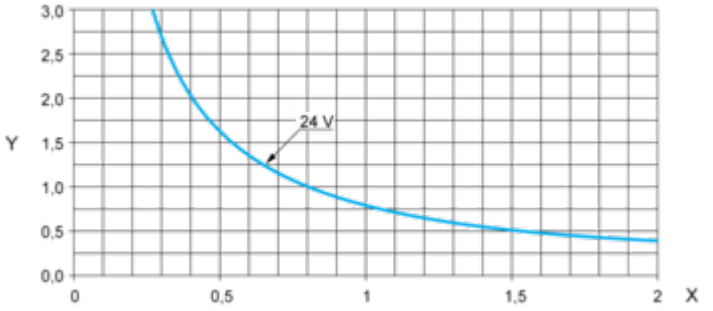

X: Current (A)
Y: Millions of operating cycles
(1) DC-12: control of resistive loads and of solid state loads isolated by opto-coupler, L/R ≤ 1 ms.

DC-13 (1)

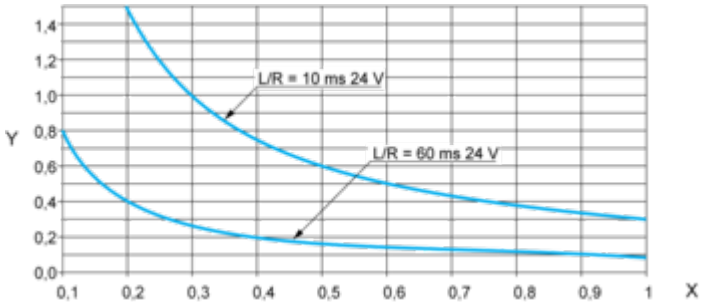

X: Current (A)
Y: Millions of operating cycles
(1) DC-13: switching electromagnets, L/R ≤ 2 x (Ue x Ie) in ms, Ue: rated operational voltage, Ie: rated operational current (with a protection diode on the load, DC-12 curves must be used with a coefficient of 0.9 applied to the number in millions of operating cycles).

Image of product / Alternate images

Alternative





