Product datasheet

Specifications

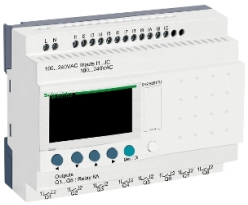

compact smart relay Zelio Logic - 20 I O - 100..240 V AC - clock - display

SR2B201FU

Main

Range of product	Zelio Logic
Product or component type	Compact smart relay

Complementary

Local display	With
Number or control scheme lines	0…240 with ladder programming 0…500 with FBD programming
Cycle time	6…90 ms
Backup time	10 years at 25 °C
Clock drift	12 min/year at 0…55 °C 6 s/month at 25 °C
Checks	Program memory on each power up
[Us] rated supply voltage	100...240 V AC
Supply voltage limits	85…264 V
Supply frequency	50/60 Hz
Maximum supply current	100 mA at 100 V (without extension) 50 mA at 240 V (without extension)
Power consumption in VA	11 VA without extension
Isolation voltage	1780 V
Protection type	Against inversion of terminals (control instructions not executed)
Discrete input number	12
Discrete input voltage	100...240 V AC
Discrete input current	0.6 mA
Discrete input frequency	57...63 Hz 47...53 Hz
Voltage state 1 guaranteed	>= 79 V for discrete input
Voltage state 0 guaranteed	<= 40 V for discrete input
Current state 1 guaranteed	>= 0.17 mA (discrete input)
Current state 0 guaranteed	<= 0.5 mA (discrete input)
Analogue input number	0
Input impedance	350 kOhm for discrete input
Number of outputs	8 relay
Output voltage limits	5...30 V DC (relay output) 24...250 V AC

Excluding VAT, FCA Jabal Ali & are subject to change – check with your local distributor.

Disclaimer: This documentation is not intended as a substitute for and is not to be used for determining suitability or reliability of these products for specific user applications

Contacts type and composition	NO for relay output
Output thermal current	8 A for all 8 outputs for relay output
Electrical durability	AC-12: 500000 cycles at 230 V, 1.5 A for relay output conforming to IEC 60947-5-1 AC-15: 500000 cycles at 230 V, 0.9 A for relay output conforming to IEC 60947-5-1 DC-12: 500000 cycles at 24 V, 1.5 A for relay output conforming to IEC 60947-5-1 DC-13: 500000 cycles at 24 V, 0.6 A for relay output conforming to IEC 60947-5-1
Switching capacity in mA	>= 10 mA at 12 V (relay output)
Operating rate in Hz	0.1 Hz (at Ie) for relay output 10 Hz (no load) for relay output
Mechanical durability	10000000 cycles for relay output
[Uimp] rated impulse withstand voltage	4 kV conforming to EN/IEC 60947-1 and EN/IEC 60664-1
Clock	With
Response time	50 ms with ladder programming (from state 0 to state 1) for discrete input 50 ms with ladder programming (from state 1 to state 0) for discrete input 50...255 ms with FBD programming (from state 0 to state 1) for discrete input 50...255 ms with FBD programming (from state 1 to state 0) for discrete input 10 ms (from state 0 to state 1) for relay output 5 ms (from state 1 to state 0) for relay output
Connections - terminals	Screw terminals, 1 x 0.2...1 x 2.5 mm² (25 AWG...14 AWG) semi-solid Screw terminals, 1 x 0.2...1 x 2.5 mm² (25 AWG...14 AWG) solid Screw terminals, 1 x 0.25...1 x 2.5 mm² (24 AWG...14 AWG) flexible with cable end Screw terminals, 2 x 0.2...2 x 1.5 mm² (24 AWG...16 AWG) solid Screw terminals, 2 x 0.25...2 x 0.75 mm² (24 AWG...18 AWG) flexible with cable end
Tightening torque	0.5 N.m
Overvoltage category	III conforming to IEC 60664-1
Net weight	0.38 kg

Environment

Immunity to microbreaks	1 ms
Product certifications	C-Tick CSA GL GOST UL
Standards	IEC 61000-4-6 level 3 IEC 61000-4-11 IEC 60068-2-27 Ea IEC 61000-4-5 IEC 60068-2-6 Fc IEC 61000-4-12 IEC 61000-4-2 level 3 IEC 61000-4-3 IEC 61000-4-4 level 3
IP degree of protection	IP20 (terminal block) conforming to IEC 60529 IP40 (front panel) conforming to IEC 60529
Environmental characteristic	EMC directive conforming to IEC 61000-6-2 EMC directive conforming to IEC 61000-6-3 EMC directive conforming to IEC 61000-6-4 EMC directive conforming to IEC 61131-2 zone B Low voltage directive conforming to IEC 61131-2
Disturbance radiated/conducted	Class B conforming to EN 55022-11 group 1
Pollution degree	2 conforming to IEC 61131-2
Ambient air temperature for operation	-20…40 °C in non-ventilated enclosure conforming to IEC 60068-2-1 and IEC 60068-2-2 -20…55 °C conforming to IEC 60068-2-1 and IEC 60068-2-2
Ambient air temperature for storage	-40…70 °C

Operating altitude	2000 m
Maximum altitude transport	3048 m
Relative humidity	95 % without condensation or dripping water

Packing Units

Unit Type of Package 1	PCE
Number of Units in Package 1	1
Package 1 Height	6.800 cm
Package 1 Width	10.000 cm
Package 1 Length	13.500 cm
Package 1 Weight	367.000 g
Unit Type of Package 2	S03
Number of Units in Package 2	20
Package 2 Height	30.000 cm
Package 2 Width	30.000 cm
Package 2 Length	40.000 cm
Package 2 Weight	7.889 kg

Contractual warranty

Warranty (in months)	18

Environmental Data

Schneider Electric aims to achieve Net Zero status by 2050 through supply chain partnerships, lower impact materials, and circularity via our ongoing “Use Better, Use Longer, Use Again” campaign to extend product lifetimes and recyclability.

Environmental Data explained >

How we assess product sustainability >

Environmental footprint

Total lifecycle Carbon footprint	**325 kg CO2 eq.**
Carbon footprint of the manufacturing phase [A1 to A3]	**45 kg CO2 eq.**
Carbon footprint of the distribution phase [A4]	**0.7 kg CO2 eq.**
Carbon footprint of the installation phase [A5]	**0.1 kg CO2 eq.**
Carbon footprint of the use phase [B2, B3, B4, B6]	**279 kg CO2 eq.**
Carbon footprint of the end-of-life phase [C1 to C4]	**0.9 kg CO2 eq.**
Environmental Disclosure	**Product Environmental Profile**

Use Better

Materials and Substances

Packaging made with recycled cardboard	**Yes**
Packaging without single use plastic	**Yes**
SCIP Number	**Eee2fc35-1620-4b70-b1d5-206e9240044e**
EU RoHS Directive	**Compliant By Exemption**
REACh Regulation	**Reference contains Substances of Very High Concern above the threshold**
PVC free	**Yes**

Use Again

Repack and remanufacture

Recyclability potential, in %	**0**
End of life manual availability	**End of Life Information**
Take-back	**No**
WEEE Label	**The product must be disposed on European Union markets following specific waste collection and never end up in rubbish bins**

Dimensions Drawings

Compact and Modular Smart Relays

Mounting on 35 mm/1.38 in. DIN Rail

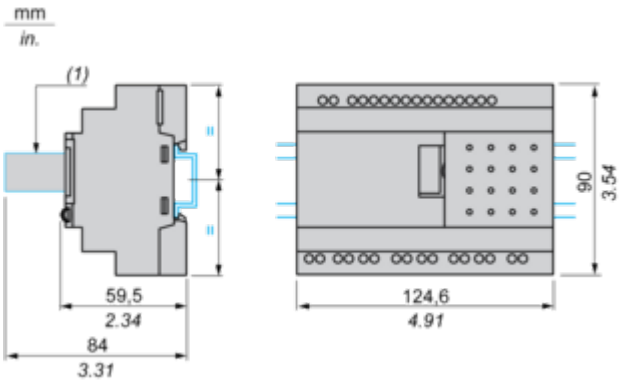

(1) With SR2USB01 or SR2BTC01

Screw Fixing (Retractable Lugs)

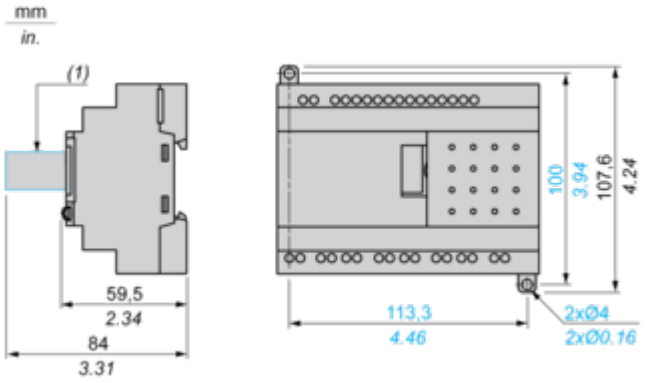

(1) With SR2USB01 or SR2BTC01

Position of Display

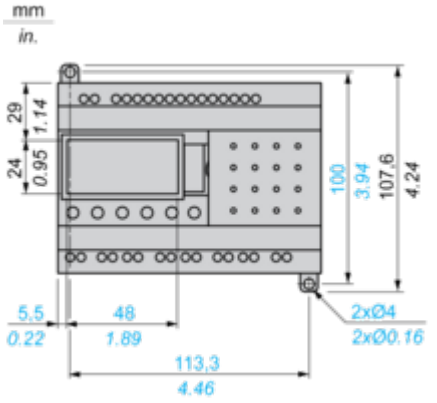

Connections and Schema

Connection of Smart Relays on AC Supply

SR••••1B, SR••••1FU

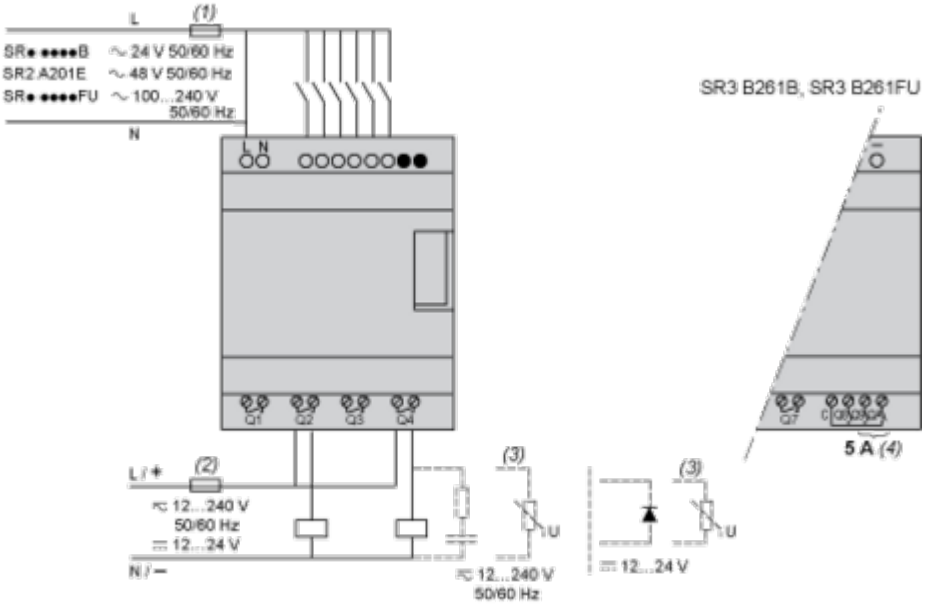

(1) 1 A quick-blow fuse or circuit-breaker.
(2) Fuse or circuit-breaker.
(3) Inductive load.
(4) Q9 and QA: 5 A (max. current in terminal C: 10 A).

With Discrete I/O Extension Module

SR3B•••B + SR3XT•••B, SR3B•••FU + SR3XT•••FU

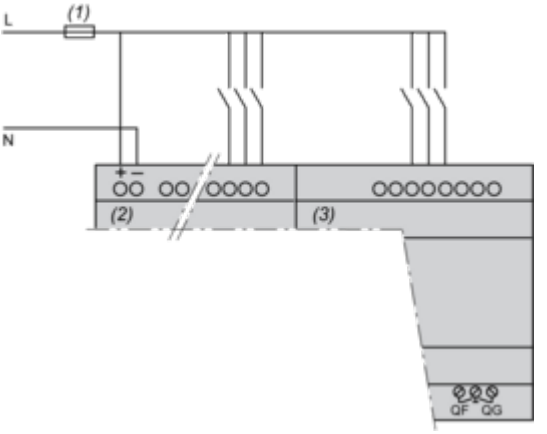

(1) 1 A quick-blow fuse or circuit-breaker.

NOTE: QF and QG: 5 A for SR3XT141••

Performance Curves

Compact and Modular Smart Relays

Electrical Durability of Relay Outputs

(in millions of operating cycles, conforming to IEC/EN 60947-5-1)
AC-12 (1)

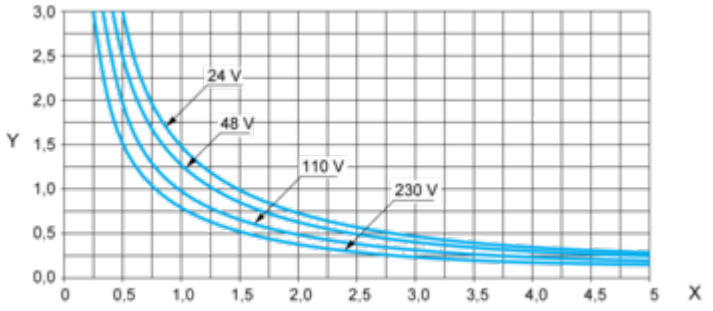

X: Current (A)
Y: Millions of operating cycles
(1) AC-12: switching resistive loads and opto-coupler isolated solid-state loads, cos ≥ 0.9.
AC-14 (1)

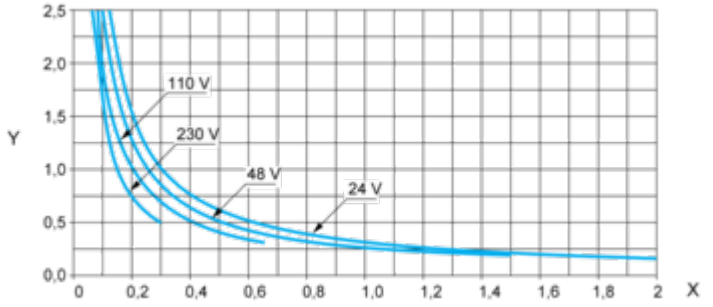

X: Current (A)
Y: Millions of operating cycles
(1) AC-14: switching small electromagnetic loads ≤ 72 VA, make: cos = 0.3, break: cos = 0.3.
AC-15 (1)

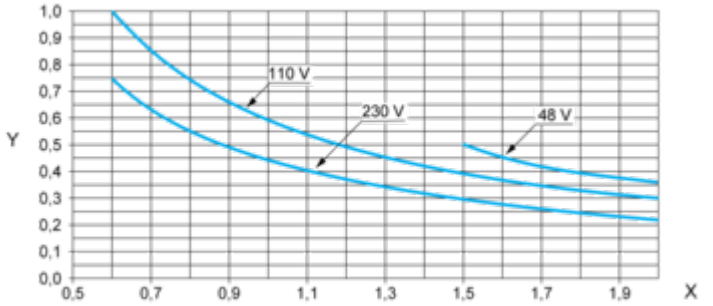

X: Current (A)
Y: Millions of operating cycles
(1) AC-15: switching electromagnetic loads ≥ 72 VA, make: cos = 0.7, break: cos = 0.4.

Image of product / Alternate images

Alternative



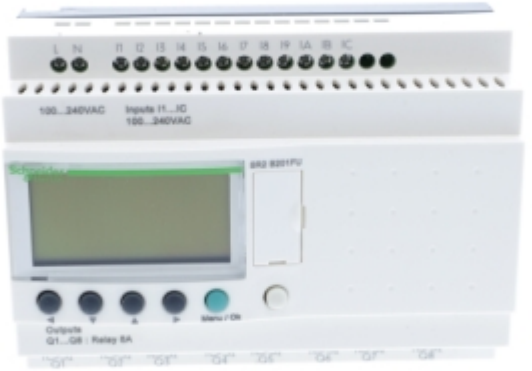




Schneider Electric
Zelio
SR2 B201FU