Product datasheet

Specifications



touch panel screen, Harmony ST6, 15inch wide display, 2COM, 2Ethernet, USB host and device, 24V DC

HMIST6700

Main

Range of product	Harmony ST6
Product or component type	Touch panel screen
Processor name	ARM Cortex-A8
Memory description	1 GB device memory 512 KB backup memory 128 MB user data memory

Complementary

Display size	15 inch
Display type	Colour TFT LCD
Display colour	16 million colours
Display resolution	1366 x 768 pixels FWXGA
Touch panel	Single touch analogue resistive
Backlight lifespan	50000 hours with white
Brightness	16 levels
Character font	ASCII ASCII (European characters) Chinese (simplified Chinese) Japanese (ANK, Kanji) Katakana Korean Taiwanese (traditional Chinese)
[Us] rated supply voltage	24 V DC (+/- 20 %)
Power consumption in W	18.5 W
Inrush current	30 A
Local signalling	Status LED green, steady for offline Status LED green, steady for operating Status LED green, flashing for operating Status LED green, faded for stand-by Status LED orange, flashing for software starting up Status LED red, steady for power supply (ON) Status LED red, flashing for operating Status LED red, off for power supply (OFF)
Number of pages	200 application pages
Port Ethernet	10/100BASE
Integrated connection type	1 COM1 serial link - 1 SUB-D 9-pin female - RS232C (rate: 2400...115200 bps)bottom 1 COM2 serial link - female RJ45 - RS485 (rate: 2400...115200 bps)back COM2 serial link (rate: 2400...187500 bps)back 1 USB 2.0 type Abottom 1 USB 2.0 type micro B 2 Ethernet

Excluding VAT, FCA Jabal Ali & are subject to change – check with your local distributor.

Disclaimer: This documentation is not intended as a substitute for and is not to be used for determining suitability or reliability of these products for specific user applications

Supply	External supply
Realtime clock	Built-in 0...50 °C Built-in 10...90 % RH
Downloadable protocols	Modbus Uni-TE Third party protocols
Product brand	Schneider Electric Modicon Mitsubishi Melsec Omron Sysmac Rockwell Automation Allen-Bradley Siemens Simatic
Fixing mode	By 6 screws, mounting on 1.6...5 mm thick panel conforming to UL 61010-2-201 By 6 screws conforming to IEC 61131-2 By 6 screws conforming to IEC 61000-6-2
Enclosure material	PC
Front material	Aluminium
Marking	CE
Cut-out dimensions	394 x 250 mm panel cut dimension
Height	268 mm
Width	412 mm
Depth	50 mm
Net weight	2.7 kg

Environment

Immunity to microbreaks	10 ms
Standards	IEC 61000-6-4 IEC 61000-6-2 IEC 61131-2 UL 61010-2-201 CSA C22.2 No 61010-2-201
Product certifications	CSA CE UKCA
Directives	2014/35/EU - low voltage directive 2014/30/EU - electromagnetic compatibility
Ambient air temperature for operation	0…50 °C
Ambient air temperature for storage	-20…60 °C
Relative humidity	10…90 % non-condensing
Operating altitude	2000 m
IP degree of protection	IP20 (rear panel) conforming to IEC 61131-2 IP65 (front panel) conforming to IEC 61131-2
NEMA degree of protection	NEMA 4 front panel (indoor use) NEMA 13 front panel (in enclosure)
Shock resistance	147 m/s² for 11 ms (X, Y, Z directions for 3 times) conforming to IEC 61131-2
Vibration resistance	+/- 3.5 mm (f = 5…9 Hz) X, Y, Z directions for 10 cycles (approx. 100 min) conforming to IEC 61131-2 9.8 m/s² (f = 9…150 Hz)
Electromagnetic compatibility	Electrical fast transient/burst immunity test - test level: 2 kV (power ports) conforming to IEC 61000-4-4 Electrical fast transient/burst immunity test - test level: 1 kV (signal ports) Electrostatic discharge immunity test - test level: 6 kV (contact discharge) conforming to IEC 61000-4-2 level 3 Electrostatic discharge immunity test - test level: 8 kV (air discharge)

Packing Units

Unit Type of Package 1	PCE
Number of Units in Package 1	1
Package 1 Height	13.000 cm
Package 1 Width	36.000 cm
Package 1 Length	53.000 cm
Package 1 Weight	3.375 kg
Unit Type of Package 2	P06
Number of Units in Package 2	8
Package 2 Height	75.000 cm
Package 2 Width	60.000 cm
Package 2 Length	80.000 cm
Package 2 Weight	38.000 kg

Contractual warranty

Warranty (in months)	18

Environmental Data

Schneider Electric aims to achieve Net Zero status by 2050 through supply chain partnerships, lower impact materials, and circularity via our ongoing “Use Better, Use Longer, Use Again” campaign to extend product lifetimes and recyclability.

Environmental Data explained >

How we assess product sustainability >

Environmental footprint

Total lifecycle Carbon footprint	**1 479 kg CO2 eq.**
Carbon footprint of the manufacturing phase [A1 to A3]	**146 kg CO2 eq.**
Carbon footprint of the distribution phase [A4]	**0.6 kg CO2 eq.**
Carbon footprint of the installation phase [A5]	**1 kg CO2 eq.**
Carbon footprint of the use phase [B2, B3, B4, B6]	**1 326 kg CO2 eq.**
Carbon footprint of the end-of-life phase [C1 to C4]	**5 kg CO2 eq.**
Environmental Disclosure	**Product Environmental Profile**

Use Better

Materials and Substances

F-gas free	**Only air and vacuum used for insulation / breaking, no F-gas including SF6**
Packaging made with recycled cardboard	**Yes**
Packaging without single use plastic	**No**
SCIP Number	**20694bec-44d9-42c3-8fdd-3861ce15e3ab**
EU RoHS Directive	**Compliant By Exemption**
REACh Regulation	**Reference contains Substances of Very High Concern above the threshold**
Halogen-free status	**Product contains halogen above thresholds**
PVC free	**No**
Silicone-free	**No**

Use Again

Repack and remanufacture

Recyclability potential, in %	**29**
End of life manual availability	**End of Life Information**
Removable battery	**User replaceable**
Take-back	**No**
WEEE Label	**The product must be disposed on European Union markets following specific waste collection and never end up in rubbish bins**

Dimensions Drawings

Dimensions

External Dimensions

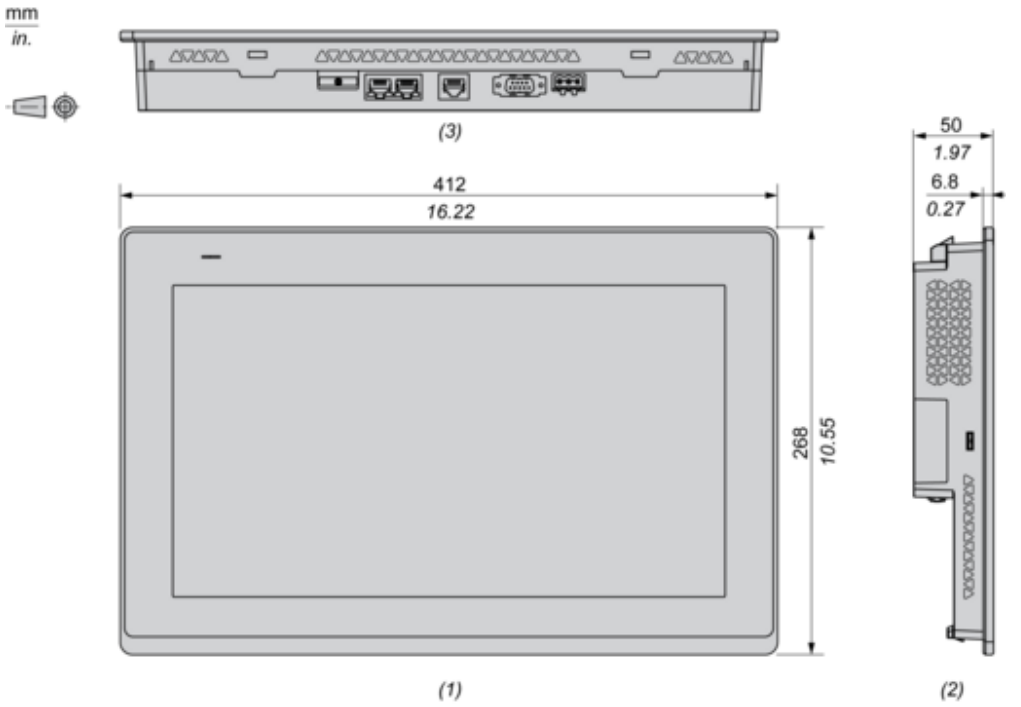

(1) : Front
(2) : Left
(3) : Bottom

Dimensions with Installation Fasteners

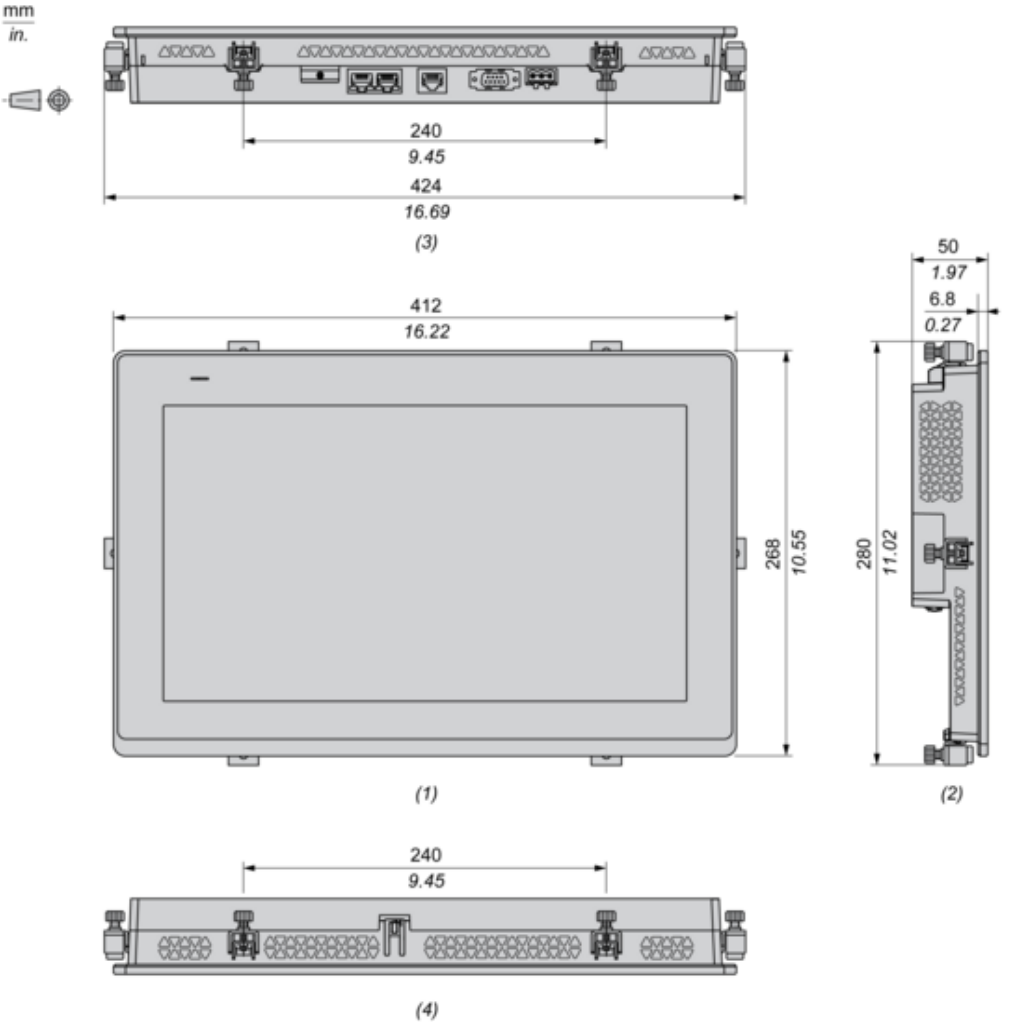

(1) : Front
(2) : Left
(3) : Bottom
(4) : Top

Dimensions with Cables

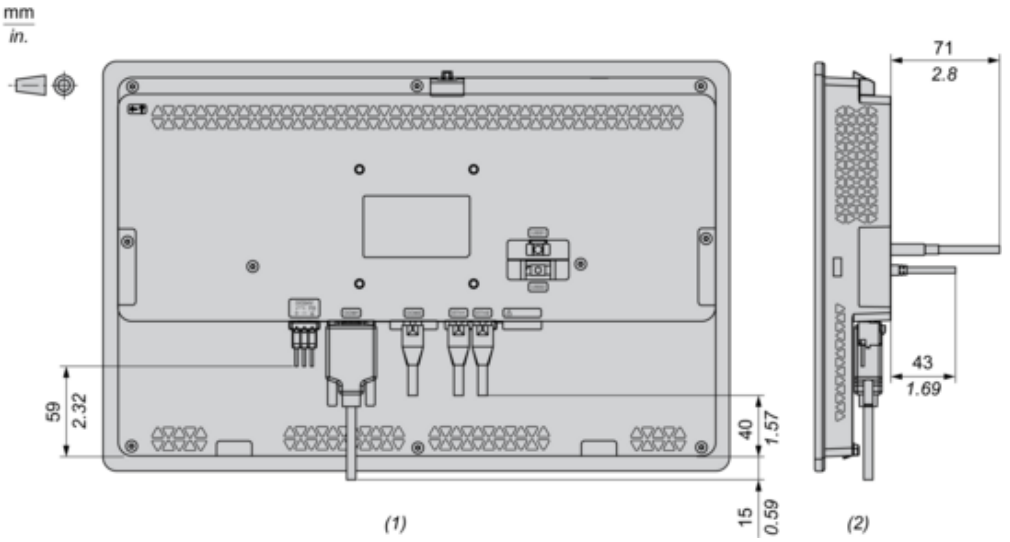

(1) : Rear
(2) : Right

Mounting and Clearance

Mounting

Panel Cut Dimensions

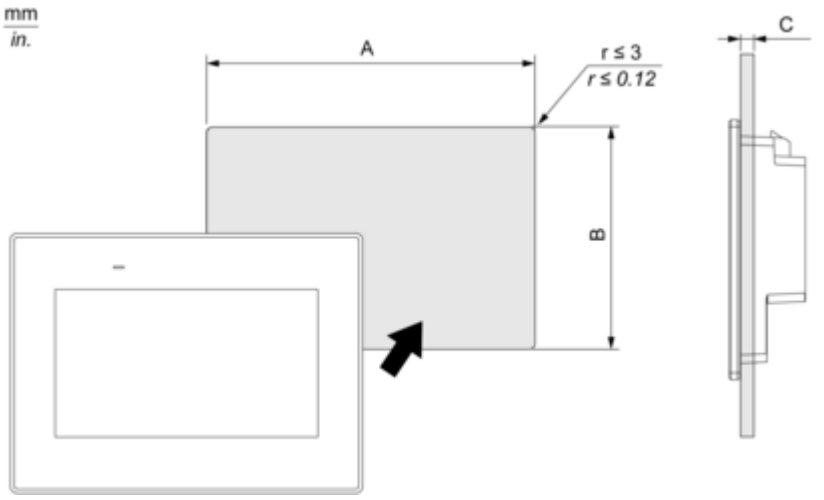

A		B		C	
mm	in.	mm	in.	mm	in.
394 (+1, -0)	15.51 (+0.04, -0)	250 (+1, -0)	9.84 (+0.04, -0)	1.6...5	0.06...0.2

Installation Requirements

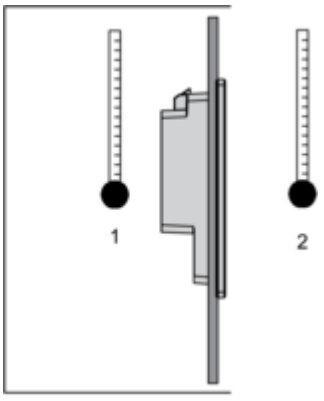

1 : Internal temperature
2 : External temperature

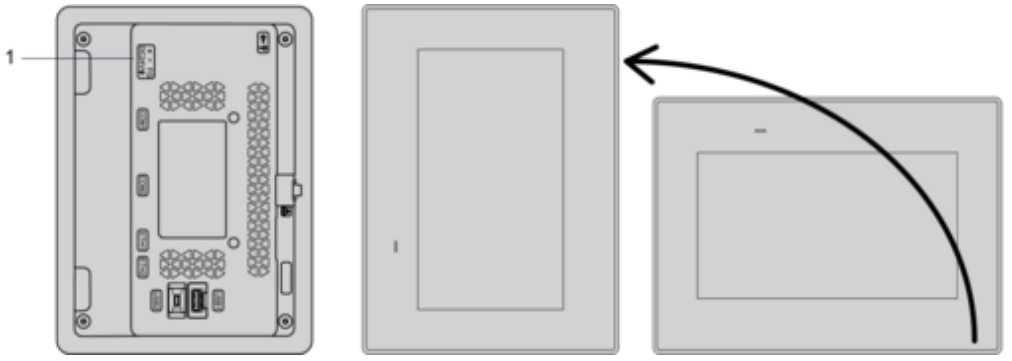

1 : Power connector

Mounting Angle

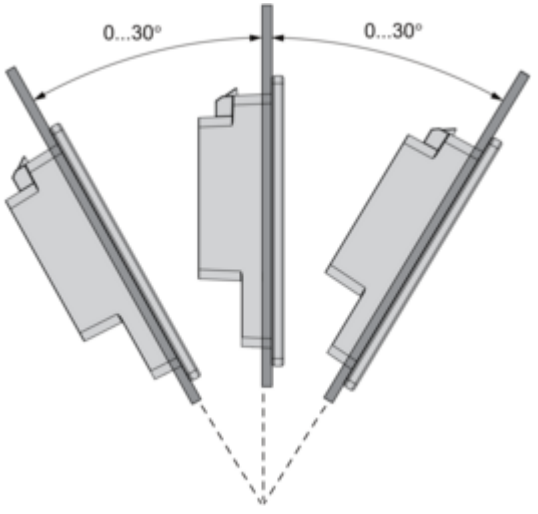

Clearance

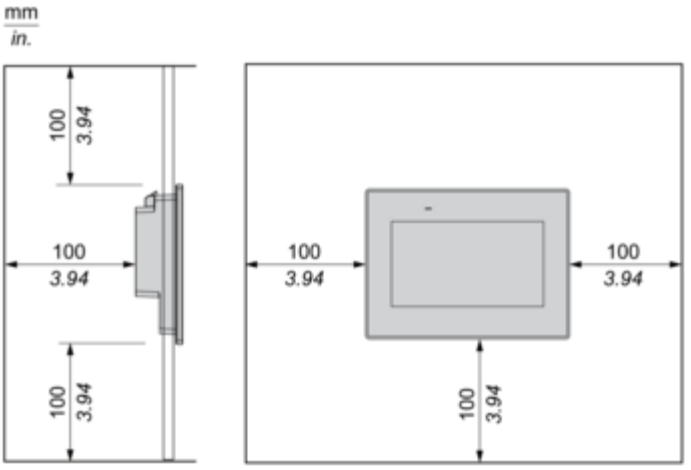
mm
in.
100
3.94
100
3.94
100
3.94
100
3.94
100
3.94
100
3.94

Image of product / Alternate images

Alternative






Schneider
Electric

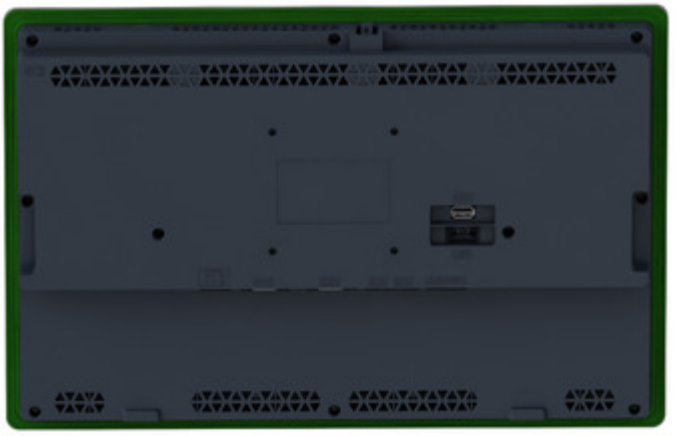




Schneider
Electric