Product datasheet

Specifications



Advanced touchscreen panel, Harmony GTO, 640 x 480 pixels VGA, 10.4" TFT, 96 MB

HMIGTO5310

Main

Range of product	Harmony GTO
Product or component type	Advanced touchscreen panel
Display colour	65536 colours
Display size	10.4 inch
Supply	External source
Battery type	Lithium battery for internal RAM, autonomy: 100 days, charging time = 5 day(s), battery life = 10 year(s)
Processor name	ARM926EJ-S
Software package	Vijeo Designer

Complementary

Terminal type	Touchscreen display
Display type	Backlit colour TFT LCD
Display resolution	640 x 480 pixels VGA
Touch sensitive zone	1024 x 1024
Touch panel	Resistive film, 1000000 cycles
Backlight lifespan	50000 hours white at 25 °C
Brightness	16 levels - control by touch panel 16 levels - control by software
Character font	Chinese (simplified Chinese) Japanese (ANK, Kanji) Korean ASCII Taiwanese (traditional Chinese)
[Us] rated supply voltage	24 V DC
Supply voltage limits	19.2…28.8 V
Inrush current	30 A
Maximum power consumption in W	12 W when power is not supplied to external devices 7 W when backlight is OFF 8 W when backlight is dimmed 17 W
Local signalling	Status LED green, steady for offline Status LED green, steady for operating Status LED orange, flashing for software starting up Status LED red, steady for power supply (ON) Status LED clear, faded for power supply (OFF) COM2 LED yellow, steady for data is being transmitted COM2 LED yellow, faded for no data transmission SD card LED green, steady for card is inserted SD card LED green, faded for card is not inserted or is not being accessed

Excluding VAT, FCA Jabal Ali & are subject to change – check with your local distributor.

Disclaimer: This documentation is not intended as a substitute for and is not to be used for determining suitability or reliability of these products for specific user applications

Memory description	Flash EPROM, 96 MB
Data backed up	512 KB internal RAM (SRAM)
Data storage equipment	SD card, <= 32 GB SDHC card, <= 32 GB
Downloadable protocols	Schneider Electric Modicon Modbus Schneider Electric Modicon Uni-TE Schneider Electric Modicon Modbus Plus Schneider Electric Modicon FIPWAY Mitsubishi Melsec third party protocols Omron Sysmac third party protocols Rockwell Automation Allen-Bradley third party protocols Siemens Simatic third party protocols Schneider Electric Modicon Modbus TCP
Integrated connection type	COM1 serial link SUB-D 9, interface: RS232C, transmission rate: 2400...115200 bps COM2 serial link RJ45, interface: RS485, transmission rate: 2400...115200 bps COM2 serial link RJ45, interface: RS485, transmission rate: 187.5 kbps compatible with Siemens MPI Ethernet RJ45, interface: 10BASE-T/100BASE-TX Ethernet RJ45, interface: IEEE 802.3 USB 2.0 type A USB 2.0 type mini B
Product mounting	Flush mounting
Fixing mode	By 4 screw clamps
Front material	PPT
Enclosure material	PPT
Type of cooling	Natural convection
Width	272.5 mm
Height	214.5 mm
Depth	57 mm
Net weight	2 kg

Environment

Standards	UL 508 IEC 61131-2 IEC 61000-6-2
Product certifications	cULus CE C-Tick KCC UKCA UKEX
Ambient air temperature for operation	0…55 °C
Ambient air temperature for storage	-20…60 °C
Relative humidity	10…90 % without condensation
Operating altitude	< 2000 m
IP degree of protection	IP20 (rear panel) conforming to IEC 60529 IP65 (front panel) conforming to IEC 60529
NEMA degree of protection	NEMA 4X front panel (indoor use)
Shock resistance	147 m/s² 3 chocks in each direction X, Y and Z conforming to IEC 61131-2
Vibration resistance	3.5 mm (f = 5…9 Hz) - X, Y, Z directions for 10 cycles (approx. 100 min) - conforming to IEC 61131-2 1 gn (f = 9…150 Hz) - X, Y, Z directions for 10 cycles (approx. 100 min) - conforming to IEC 61131-2
Resistance to electrostatic discharge	6 kV contact discharge conforming to IEC 61000-4-2 level 3

Packing Units

Unit Type of Package 1	PCE
Number of Units in Package 1	1
Package 1 Height	17.500 cm
Package 1 Width	30.000 cm
Package 1 Length	35.500 cm
Package 1 Weight	2.625 kg
Unit Type of Package 2	P12
Number of Units in Package 2	30
Package 2 Height	82.000 cm
Package 2 Width	80.000 cm
Package 2 Length	120.000 cm
Package 2 Weight	100.000 kg

Contractual warranty

Warranty (in months)	18

Environmental Data

Schneider Electric aims to achieve Net Zero status by 2050 through supply chain partnerships, lower impact materials, and circularity via our ongoing “Use Better, Use Longer, Use Again” campaign to extend product lifetimes and recyclability.

Environmental Data explained >

How we assess product sustainability >

Environmental footprint

Total lifecycle Carbon footprint	**865 kg CO2 eq.**
Carbon footprint of the manufacturing phase [A1 to A3]	**164 kg CO2 eq.**
Carbon footprint of the distribution phase [A4]	**0.3 kg CO2 eq.**
Carbon footprint of the installation phase [A5]	**0.6 kg CO2 eq.**
Carbon footprint of the use phase [B2, B3, B4, B6]	**698 kg CO2 eq.**
Carbon footprint of the end-of-life phase [C1 to C4]	**3 kg CO2 eq.**
Environmental Disclosure	**Product Environmental Profile**

Use Better

Materials and Substances

F-gas free	**Only air and vacuum used for insulation / breaking, no F-gas including SF6**
Packaging made with recycled cardboard	**Yes**
Packaging without single use plastic	**No**
SCIP Number	**3647523b-250a-4687-bcce-2d1cdcab982a**
EU RoHS Directive	**Compliant By Exemption**
REACh Regulation	**Reference contains Substances of Very High Concern above the threshold**
Halogen-free status	**Product contains halogen above thresholds**
PVC free	**No**
Silicone-free	**No**

Use Again

Repack and remanufacture

Recyclability potential, in %	**26**
End of life manual availability	**End of Life Information**
Removable battery	**User replaceable**
Take-back	**No**
WEEE Label	**The product must be disposed on European Union markets following specific waste collection and never end up in rubbish bins**

Dimensions Drawings

Dimensions

External Dimensions

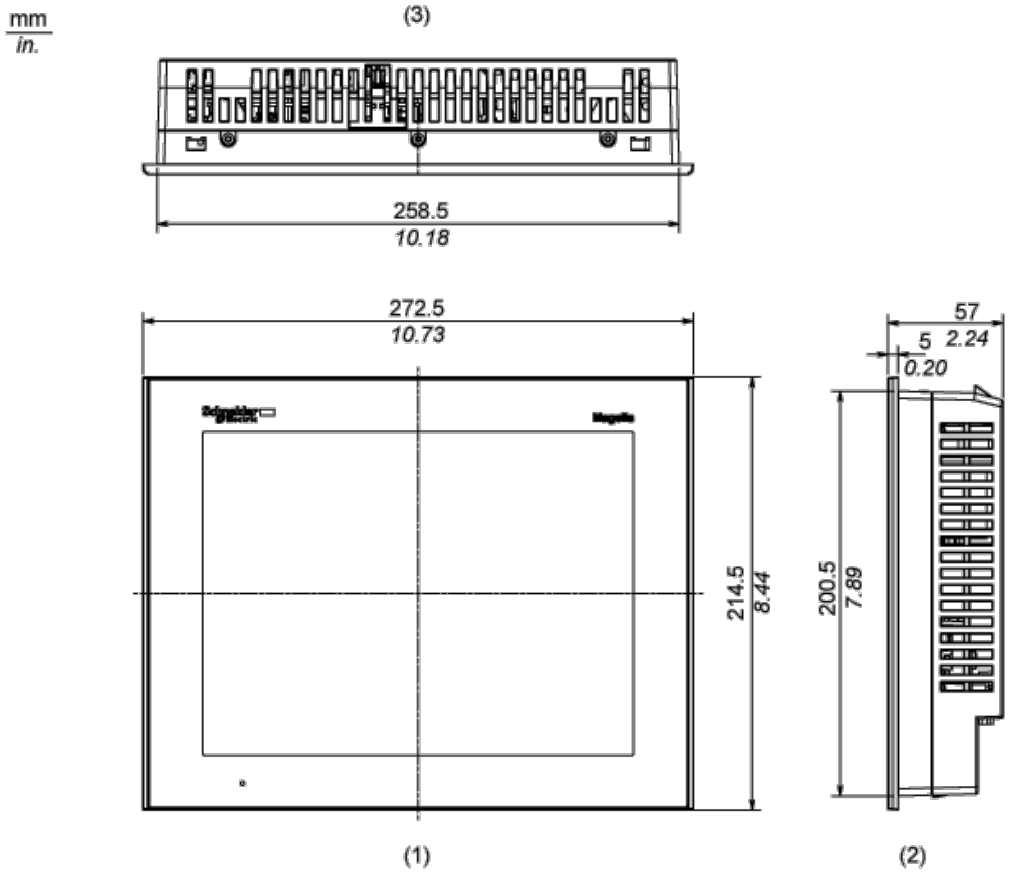

1 Front

2 Right Side

3 Top

Installation with Installation Fasteners

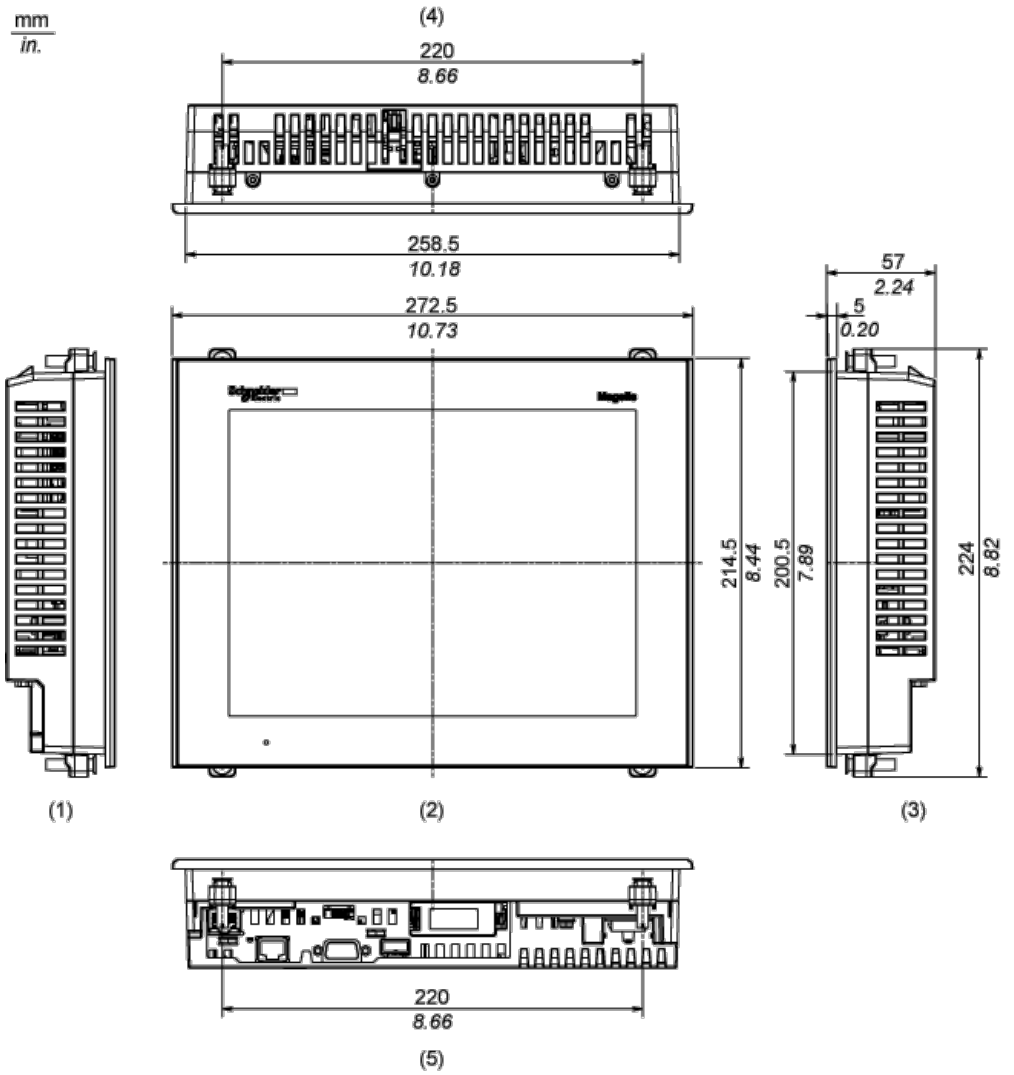

1 Left Side

2 Front

3 Right Side

4 Top

5 Bottom

Dimensions with Cables

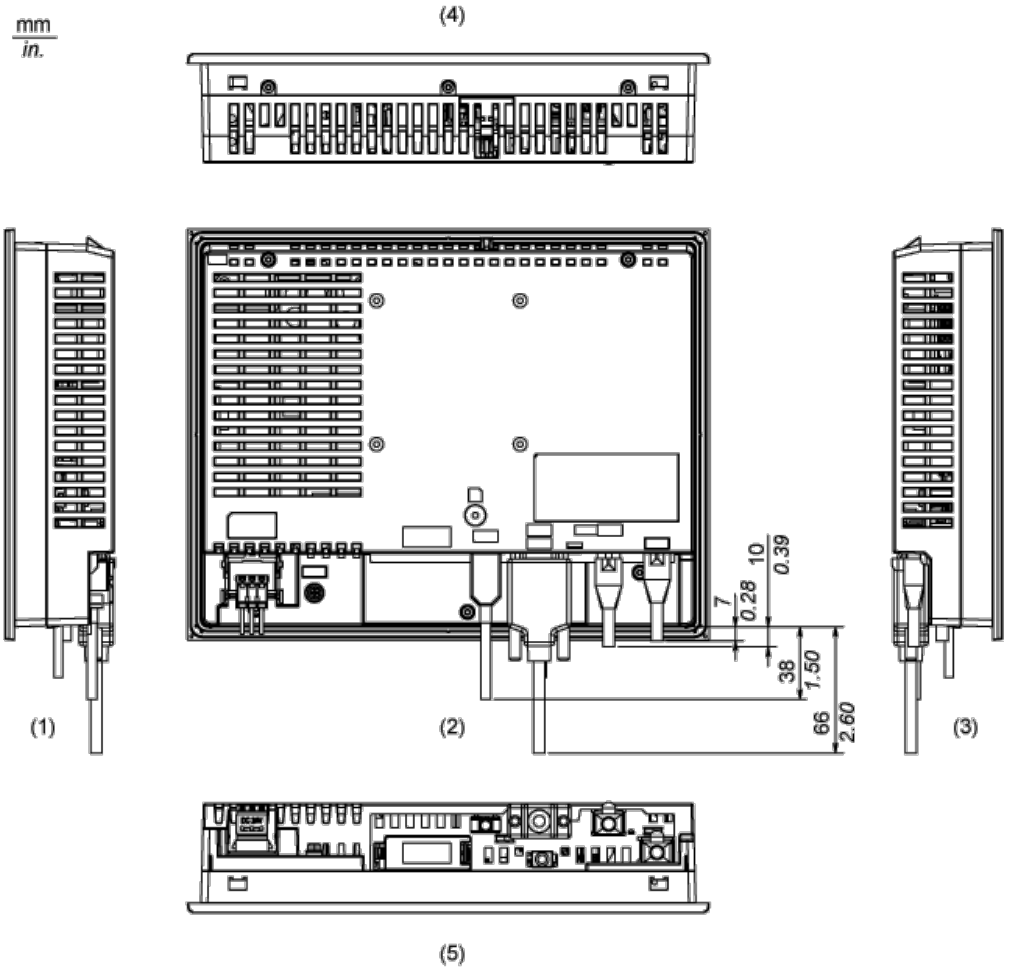

1 Left Side

2 Rear

3 Right Side

4 Top

5 Bottom

Mounting and Clearance

Mounting

Panel Cut Dimensions

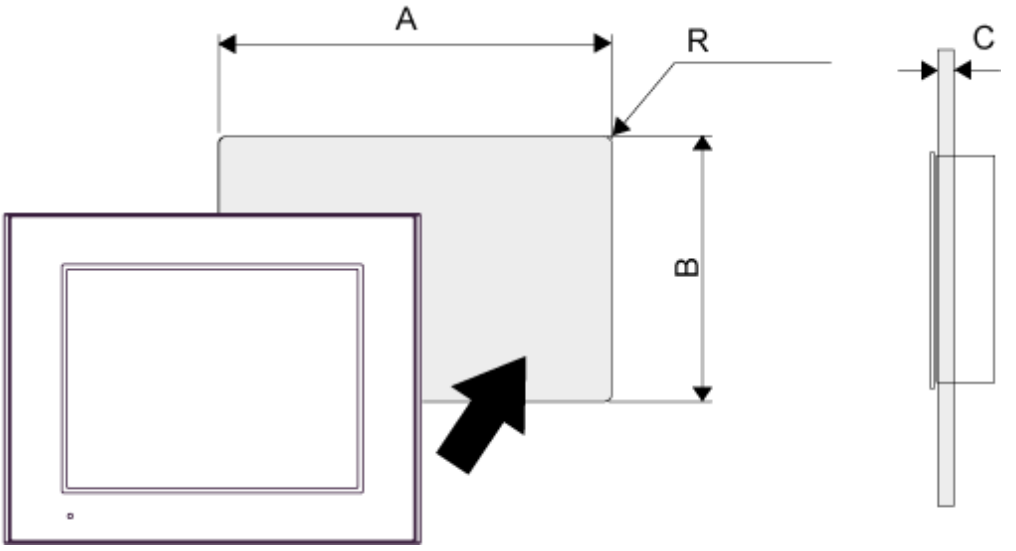

A		B		C		R	
mm	in.	mm	in.	mm	in.	mm	in.
259 (+1, -0)	10.20 (+0.04, -0)	201 (+1, -0)	7.91 (+0.04, -0)	1.6...5	0.06...0.2	3 max.	0.12 max.

Installation Fastener Dimensions

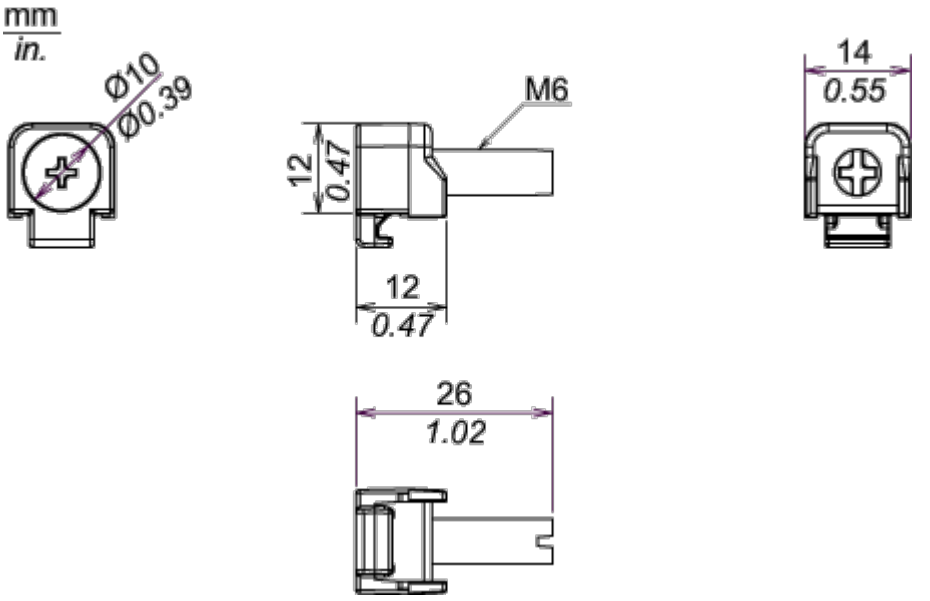

Installation Requirements

Mounting Angle

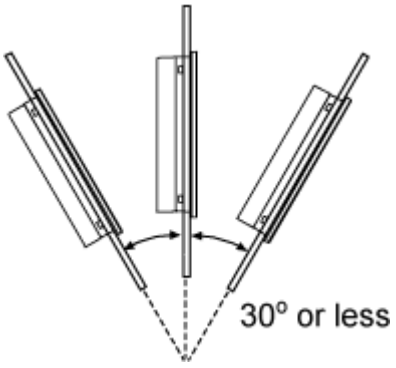

When installing the panel in a slanted position with an incline more than 30°, the ambient temperature must not exceed 40 °C (104 °F). You may need to use forced air cooling (fan,A/C) to ensure the ambient operating temperature is 40°C or less (104 °F or less).

Clearance

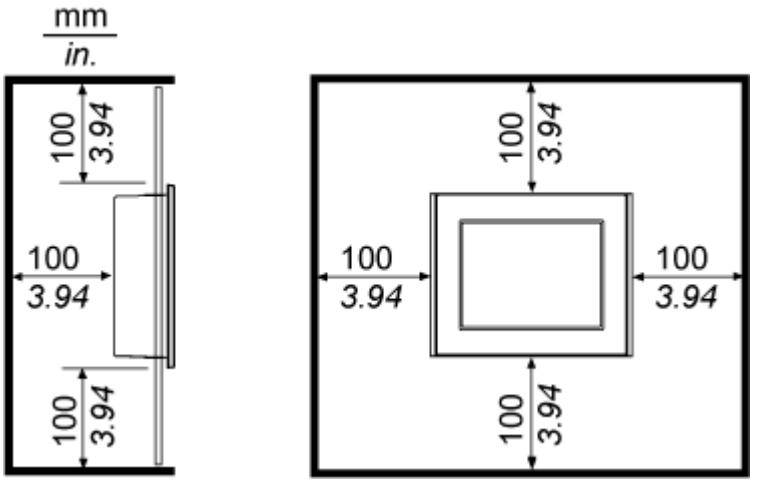

Image of product / Alternate images

Alternative



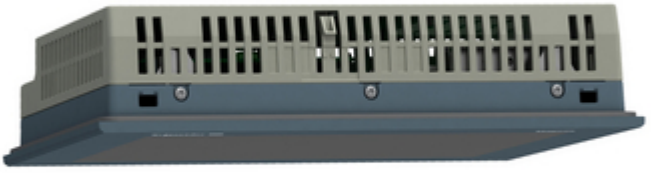




DC 24V

Product datasheet HMIGTO5310



