Product datasheet

Specifications



Variable speed drive ATV310 - 7.5 kW - 10 hp - 380...460 V - 3 phase

ATV310HU75N4E

Main

Range of product	Altivar 310
Product or component type	Variable speed drive
Product specific application	Simple machine
Assembly style	With heat sink
Device short name	ATV310
Network number of phases	Three phase
[Us] rated supply voltage	380...460 V - 15...10 %
Motor power kW	7.5 kW for heavy duty 11 kW for normal duty
Motor power hp	10 hp for heavy duty 15 hp for normal duty
Noise level	50 dB

Complementary

Quantity per set	Set of 1
EMC filter	Without EMC filter
Type of cooling	Integrated fan
Communication port protocol	Modbus
Connector type	RJ45 (on front face) for Modbus
Physical interface	2-wire RS 485 for Modbus
Transmission frame	RTU for Modbus
Transmission rate	4800 bit/s 9600 bit/s 19200 bit/s 38400 bit/s
Number of addresses	1…247 for Modbus
Communication service	Read holding registers (03) 29 words Write single register (06) 29 words Write multiple registers (16) 27 words Read/write multiple registers (23) 4/4 words Read device identification (43)
Line current	26.6 A at 380 V (heavy duty) 29.5 A at 380 V (normal duty) 22.4 A at 460 V (heavy duty) 24.8 A at 460 V (normal duty)
Apparent power	17.8 kVA at 460 V (heavy duty) 19.4 kVA at 460 V (normal duty)

Excluding VAT, FCA Jabal Ali & are subject to change – check with your local distributor.

Disclaimer: This documentation is not intended as a substitute for and is not to be used for determining suitability or reliability of these products for specific user applications

Prospective line Isc	22 kA (heavy duty) 5 kA (normal duty)
Continuous output current	17 A heavy duty 22.8 A normal duty
Maximum transient current	25.5 A during 60 s (heavy duty) 25.1 A during 60 s (normal duty)
Power dissipation in W	241.2 W, at In (heavy duty) 317.8 W, at In (normal duty)
Speed drive output frequency	0.5…400 Hz
Nominal switching frequency	4 kHz
Switching frequency	2...12 kHz adjustable
Speed range	1…20 for asynchronous motor
Transient overtorque	170…200 % of nominal motor torque depending on drive rating and type of motor
Braking torque	Up to 150 % of nominal motor torque with braking resistor Up to 70 % of nominal motor torque without braking resistor
Asynchronous motor control profile	Voltage/frequency ratio (V/f) Voltage/frequency ratio - Energy Saving, quadratic U/f Sensorless vector control (SVC)
Motor slip compensation	Adjustable
Output voltage	380...460 V three phase
Electrical connection	Terminal, clamping capacity: 6...10 mm², 10 AWG...7 AWG (L1, L2, L3, PA/+, PB, U, V, W)
Tightening torque	2.2…2.4 N.m
Insulation	Electrical between power and control
Supply	Internal supply for reference potentiometer: 5 V (4.75…5.25 V)DC, <10 mA with overload and short-circuit protection Internal supply for logic inputs: 24 V (20.4…28.8 V)DC, <100 mA with overload and short-circuit protection
Analogue input number	1
Analogue input type	Configurable current AI1 0...20 mA 250 Ohm Configurable voltage AI1 0...10 V 30 kOhm Configurable voltage AI1 0...5 V 30 kOhm
Discrete input number	4
Discrete input type	Programmable LI1...LI4 24 V 18...30 V
Discrete input logic	Negative logic (sink), > 16 V (state 0), < 10 V (state 1), input impedance 3.5 kOhm Positive logic (source), 0...< 5 V (state 0), > 11 V (state 1)
Sampling duration	10 ms for analogue input 20 ms, tolerance +/- 1 ms for logic input
Linearity error	+/- 0.3 % of maximum value for analogue input
Analogue output number	1
Analogue output type	AO1 software-configurable voltage: 0...10 V AC 0...10 V 0…0.02 A, impedance: 470 Ohm, resolution 8 bits AO1 software-configurable current: 0...20 mA, impedance: 800 Ohm, resolution 8 bits
Discrete output number	2
Discrete output type	Logic output LO+, LO- Protected relay output R1A, R1B, R1C 1 C/O
Minimum switching current	5 mA at 24 V DC for logic relay
Maximum switching current	2 A at 250 V AC on inductive load cos phi = 0.4 L/R = 7 ms for logic relay 2 A at 30 V DC on inductive load cos phi = 0.4 L/R = 7 ms for logic relay 3 A at 250 V AC on resistive load cos phi = 1 L/R = 0 ms for logic relay 4 A at 30 V DC on resistive load cos phi = 1 L/R = 0 ms for logic relay

Acceleration and deceleration ramps	Linear from 0...999.9 s S U
Braking to standstill	By DC injection, <30 s
Protection type	Line supply overvoltage Line supply undervoltage Overcurrent between output phases and earth Overheating protection Short-circuit between motor phases Against input phase loss in three-phase Thermal motor protection via the drive by continuous calculation of I^2t
Frequency resolution	Analog input: converter A/D, 10 bits Display unit: 0.1 Hz
Time constant	20 ms +/- 1 ms for reference change
Operating position	Vertical +/- 10 degree
Height	232 mm
Width	150 mm
Depth	171 mm
Net weight	3.7 kg
Supply frequency	50/60 Hz +/- 5 %
Product destination	Asynchronous motors

Environment

Electromagnetic compatibility	Electrical fast transient/burst immunity test - test level: level 4 conforming to IEC 61000-4-4 Electrostatic discharge immunity test - test level: level 3 conforming to IEC 61000-4-2 Immunity to conducted disturbances - test level: level 3 conforming to IEC 61000-4-6 Radiated radio-frequency electromagnetic field immunity test - test level: level 3 conforming to IEC 61000-4-3 Voltage dips and interruptions immunity test conforming to IEC 61000-4-11 Surge immunity test - test level: level 3 conforming to IEC 61000-4-5
Standards	IEC 61800-3 IEC 61800-5-1
Product certifications	CE EAC KC
IP degree of protection	IP20 without blanking plate on upper part IP4X top
Pollution degree	2 conforming to IEC 61800-5-1
Environmental characteristic	Dust pollution resistance class 3S2 conforming to IEC 60721-3-3 Chemical pollution resistance class 3C3 conforming to IEC 60721-3-3
Shock resistance	15 gn conforming to IEC 60068-2-27 for 11 ms
Relative humidity	5…95 % without condensation conforming to IEC 60068-2-3 5…95 % without dripping water conforming to IEC 60068-2-3
Ambient air temperature for storage	-25…70 °C
Ambient air temperature for operation	-10…55 °C without derating 55…60 °C protective cover from the top of the drive removed with current derating 2.2 % per °C
Operating altitude	<= 1000 m without derating

Packing Units

Unit Type of Package 1	PCE
Number of Units in Package 1	1

Package 1 Height	23.500 cm
Package 1 Width	20.500 cm
Package 1 Length	27.000 cm
Package 1 Weight	4.034 kg
Unit Type of Package 2	P06
Number of Units in Package 2	12
Package 2 Height	105.000 cm
Package 2 Width	60.000 cm
Package 2 Length	80.000 cm
Package 2 Weight	48.400 kg

Contractual warranty

Warranty (in months)	18

Environmental Data

Schneider Electric aims to achieve Net Zero status by 2050 through supply chain partnerships, lower impact materials, and circularity via our ongoing “Use Better, Use Longer, Use Again” campaign to extend product lifetimes and recyclability.

Environmental Data explained >

How we assess product sustainability >

Environmental footprint

Total lifecycle Carbon footprint	**9 397 kg CO2 eq.**
Carbon footprint of the manufacturing phase [A1 to A3]	**121 kg CO2 eq.**
Carbon footprint of the distribution phase [A4]	**0.4 kg CO2 eq.**
Carbon footprint of the installation phase [A5]	**1 kg CO2 eq.**
Carbon footprint of the use phase [B2, B3, B4, B6]	**9 266 kg CO2 eq.**
Carbon footprint of the end-of-life phase [C1 to C4]	**9 kg CO2 eq.**
Environmental Disclosure	**Product Environmental Profile**

Use Better

Materials and Substances

Packaging made with recycled cardboard	**Yes**
Packaging without single use plastic	**Yes**
SCIP Number	**E49f0788-3653-4804-9d4f-e465c3cf5397**
EU RoHS Directive	**Compliant By Exemption**
REACh Regulation	**Reference contains Substances of Very High Concern above the threshold**

Energy efficiency

Product contributes to saved and avoided emissions	**Yes**

Use Again

Repack and remanufacture

Recyclability potential, in %	**23**
End of life manual availability	**End of Life Information**
Take-back	**No**
WEEE Label	**The product must be disposed on European Union markets following specific waste collection and never end up in rubbish bins**

Dimensions Drawings

Dimensions

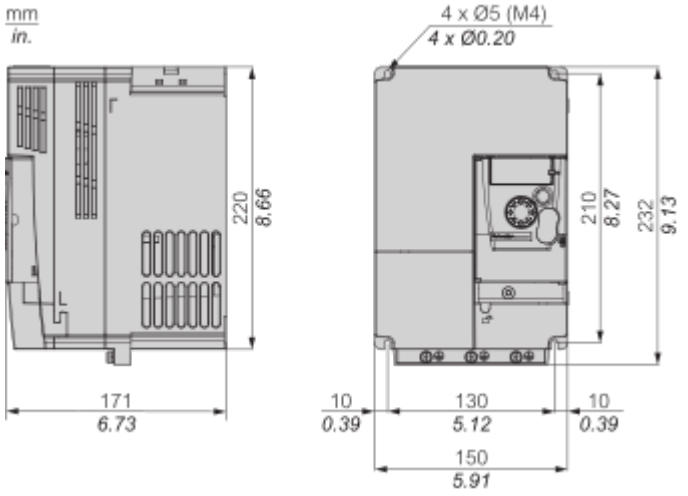

Mounting and Clearance

Mounting Recommendations

Clearance

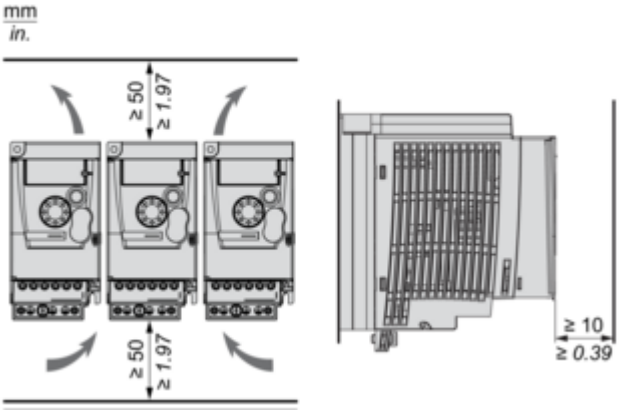

Mounting Types

Mounting Type A

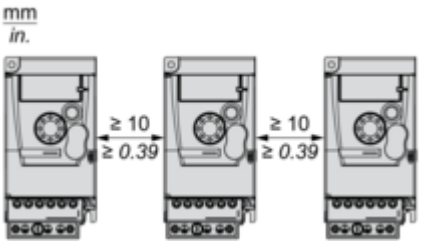

Mounting Type B

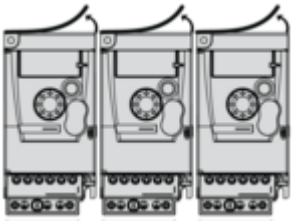

Remove the protective cover from the top of the drive.

Connections and Schema

Three-Phase Power Supply Wiring Diagram

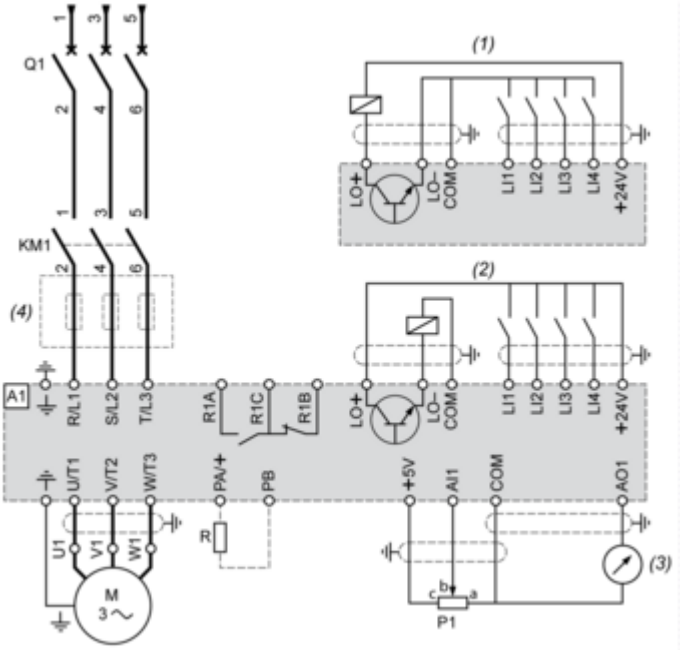

A1 : Drive
KM1 : Contactor (only if a control circuit is needed)
P1 : 2.2 kΩ reference potentiometer. This can be replaced by a 10 kΩ potentiometer (maximum).
Q1 : Circuit breaker
R : Braking resistor (optional)
(1) Negative logic (Sink)
(2) Positive logic (Source) (factory set configuration)
(3) 0...10 V or 0...20 mA
(4) Line choke three-phase (optional)

Image of product / Alternate images

Alternative











