Product Data Sheet
00813-0500-3104, Rev AD
May 2025

Rosemount™ 3415 and 3416

Dual-Configuration Gas Ultrasonic Flow Meters

ROSEMOUNT™

EMERSON™

3415 and 3416 Gas Ultrasonic Flow Meters

Advanced check metering

The new Dual-Configuration 3415 and 3416 Gas Ultrasonic Flow Meters deliver exceptional custody transfer accuracy and reliability by combining the power and performance of a field-proven 4-path chordal, British Gas-design meter with a second reflective check meter in one body. These self-verification meters provide advanced detection and validation of process disturbances to help operators identify critical issues before measurement is adversely affected.

The Model 3415 meter offers a 4-path custody transfer meter with a single-path reflective check meter, providing continuous real-time measurement verification and an early warning of process and/or meter deviations. With immediate alerts for blockages, contamination, and other flow disturbances, operators can reduce maintenance time and costs as well as implement predictive maintenance practices and eliminate unnecessary trips into the field. In addition, the integrated check meter ensures cost-effective, continuous backup measurement is available. The ultra-reliable Model 3416 meter offers the same 3415 meter configuration along with an additional reflective path positioned vertically. This diagnostic path detects even a thin layer of liquid or buildup on the bottom of the pipe that can cause significant measurement error and higher LAUF product.

Available in DN100 to DN600 (4 to 24 in.) line sizes, each standard Model 3415 or 3416 meter is equipped with modular 3410 Series Electronics and rugged T-20 Series Transducers that offer greater tolerance to wet, rich, and/or dirty gas. A new patented transducer synchronization method ensures 3410 Series Electronics provide the highest sampling rates possible, resulting in more stable ultrasonic signals for better flow resolution.

The latest version of MeterLink™ Software gives operators advanced insight and allows real-time meter monitoring from a PC or laptop to help eliminate unplanned shutdowns.

Contents

3415 and 3416 Gas Ultrasonic Flow Meters....2
Standard specifications....5
Materials of construction....8
Flow meter sizing....10
Local LCD display....14
Input/output (I/O)....15
Diagnostics and software....15
Safety and compliance....18
Weights and dimensions....22
Configuration code....28

Figure 1: Model 3415 Meter and Model 3416 Meter Paths

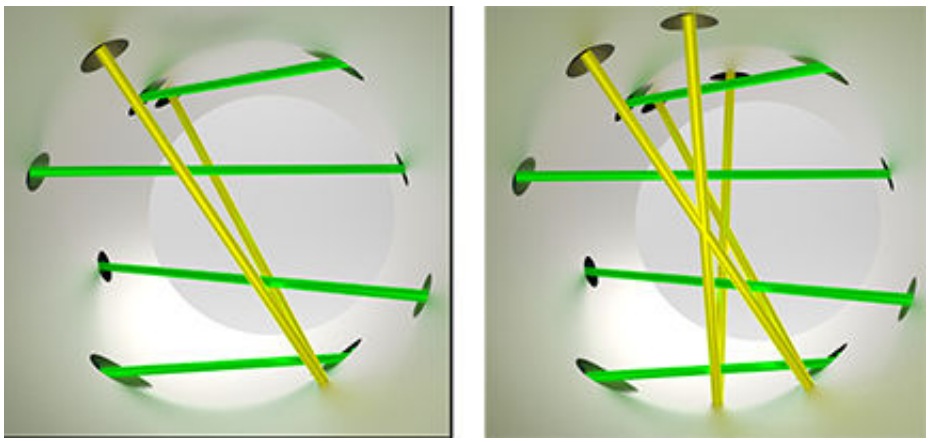

In addition to the 4-path, British Gas-design custody meter, the Model 3415 meter (left) offers a single reflective path for integrated check metering while the Model 3416 meter (right) features a second, vertical path for advanced liquid and build up detection.

Typical application

- Custody transfer for natural gas transmission lines

Application sites

- Transmission pipelines
- Gas plant inlets/outlets
- Production and gathering
- Underground storage
- Industrial interconnects

Features and benefits

- Redundant models with a field-proven 4-path chordal, British Gas-design meter (OIML Accuracy Class 0.5) and a 1-path or 2-path reflective check meter in one body offering:
  - Direct inputs for pressure, temperature, and gas composition that allow speed of sound calculations using AGA 10 2003 and GERG-2008 (AGA 8 Part 2, 2017)
  - Automatic calculations and totalization of corrected volume rates, mass rates, and energy rates
  - Ethernet connectivity for expedited data transfer
- The Rosemount 3415 and 3416 Gas Ultrasonic Flow Meters are now available with Smart Meter Verification, giving users access to expert flow analysis and providing a simplified and intuitive overall measurement status result minimizing time spent analyzing data. This new feature can be accessed via Modbus or MeterLink™ Diagnostic Software.
- Immediate detection of process disturbances via integration of chordal and reflective methodologies:
  - Provides early warning of process or gas quality issues to minimize LAUF and/or prevent equipment damage

  - Offers a backup measurement, if needed
  - Allows for predictive maintenance to minimize trips to the field and reduce maintenance related costs
- Patented transducer synchronization method increases sampling speed, resulting in faster detection of flow disturbances to expedite alerts and troubleshooting
- 3410 Series Electronics provide an expandable platform and an expansive archive data log to simplify accounting and dispute resolution
- New Type 4 CPU Module offers additional I/O with five frequency or digital outputs and one digital input that can be configured as the sixth output, if needed
- Local LCD displays (optional) on each transmitter offer up to ten user-selectable scrolling variables
- High rangeability (>100:1) eliminates an additional meter run
- 5D upstream piping requirement (with flow conditioner) for offshore platforms and other sites with limited straight run
- Simplifies installation with no intermediate flanges required

Access information when you need it with asset tags

Newly shipped devices include a unique QR code asset tag that enables you to access serialized information directly from the device. With this capability, you can:

- Access device drawings, diagrams, technical documentation, and troubleshooting information in your MyEmerson account.
- Improve mean time to repair and maintain efficiency.
- Ensure confidence that you have located the correct device.
- Eliminate the time-consuming process of locating and transcribing nameplates to view asset information.

Standard specifications

If requirements are outside of the listed specifications, consult an Emerson Ultrasonics product specialist. Depending on the application, other product and material offerings may be available.

Meter specifications: 4-path custody transfer meter

Characteristics

- 4-path (eight transducers) chordal design

Meter Performance

- Flow calibrated accuracy is ±0.1 percent of reading over entire flow calibration range
- Repeatability is ±0.05 percent of reading for 5 to 100 ft/s (1.5 to 30.5 m/s)

Velocity Range

- Nominal 0 to 100 ft/s (0 to 30 m/s) with over-range performance exceeding 125 ft/s (38 m/s) on some sizes
- Meter meets or exceeds AGA 9 2017 3rd Edition / ISO 17089 performance specifications

Table 1: AGA 9 / ISO 17089 Flow Rate Values (US Customary Units)

Meter Size (inches)	4 to 24
q_{min} (ft/s)	1.7
q_t (ft/s)	10
q_{max} (ft/s)	100

Table 2: AGA 9 / ISO 17089 Flow Rate Values (Metric Units)

Meter Size (DN)	100 to 600
q_{min} (m/s)	0.5
q_t (m/s)	3.048
q_{max} (m/s)	30.48

Meter specifications: check meter

Characteristics

- 1-path (two transducer) and 2-path (four transducer) reflective designs

Meter Performance

- Flow calibrated accuracy is ±0.2 percent of reading
- Accuracy is typically ±1.5 percent of actual volume flow (without flow calibration)
- Repeatability is ±0.1 percent of reading for 5 to 100 ft/s (1.5 to 30.5 m/s)

Velocity Range

- Nominal up to 100 ft/s (30 m/s)
- Extended range up to 115 ft/s (35 m/s) on some sizes

Electronics performance

Power per transmitter

- 10.4 Vdc to 36 Vdc
- 8 watts typical; 15 watts maximum

Total meter consumption

- 16 watts typical; 30 watts maximum

Mechanical ratings

Line sizes

- 4 to 6 in. (DN100 to DN150) with Dual-X orientation
- 8 to 24 in. (DN200 to DN600) with British Gas (BG) orientation

Operating gas temperature (transducers)[1]

- T-21: –4 °F to +212 °F (–20 °C to +100 °C)
- T-41: –58 °F to +212 °F (–50 °C to +100 °C)
- T-22: –58 °F to +212 °F (–50°C to +100 °C)

Operating pressure range (transducers)[1]

- T-21/T-41/T-22: 150 to 4,000 psig (10.34 to 275.79 bar)

Flanges

- Raised Face (RF) and Ring Type Joint (RTJ) for ANSI Classes 300 to 1,500 (PN 50 to 250)
- Compact flanges/hub end connectors (optional)

NACE, NORSOK, and PED compliance

- Designed for NACE compliance[2]
- NORSOK available upon request
- PED available upon request

Electronics ratings

Operating temperature

- –40 °F to +212 °F (–40 °C to +100 °C)

(1) T-21 and T-41 transducers are the only transducers available for the check meter.
(2) It is the equipment user's responsibility to select the materials suitable for the intended services.

Operating relative humidity

- Up to 95 percent non-condensing

Storage temperature

- –40 °F to +185 °F (–40 °C to +85 °C) with a low temperature storage limit of –4 °F (–20 °C) for T-21 transducers and –58 °F (–50 °C) for T-41/T-22 transducers

Electronic housing

- Integral mount

Materials of construction

The materials of construction are dependent upon application requirements that must be specified by the customer. If needed, an Emerson representative can provide material guidance.

Material specifications

Body and flange

Forgings

- ASTM A350 Gr LF2 Carbon Steel[3]
  –50 °F to +302 °F (–46 °C to +150 °C)
- ASTM A350 Gr LF2 Carbon Steel[3]
  –58 °F to +302 °F (–50 °C to +150 °C)
- ASTM A182 Gr F316/F316L Stainless Steel (Dual Certified)
  –50 °F to +302 °F (–46 °C to +150 °C)
- ASTM A182 Gr F51 Duplex Stainless Steel[4]
  –58 °F to +302 °F (–50 °C to +150 °C)
- ASTM A105 Carbon Steel
  –20 °F to +302 °F (–29 °C to +150 °C)

Enclosure housing

- Standard: ASTM B26 Gr A356.0 T6 Aluminum
- Optional: ASTM A351 Gr CF8M Stainless Steel

Electronics bracket

Stainless Steel

- 316SS

Transducer components

Transducer Mounts and Holders O-rings

- Standard: Nitrile Butadiene Rubber (NBR)
- Other materials available

Transducer Mounts and Holders

- ASTM A564 Type 630 Stainless Steel Mounts
- ASTM A479 316L Stainless Steel Holders
- Inconel® ASTM B446 (UNS N06625) Gr 1 Mount (optional)
- Inconel ASTM B446 (UNS N06625) Gr 1 Holder (optional)

(3) Impact tested per specified ASTM standard.
(4) A995 4A material is not yet approved in Canada.

Paint specifications

Body and flange exterior

Carbon Steel Body Material

- Two coat paint; inorganic zinc primer and acrylic lacquer topcoat (standard)

Stainless Steel or Duplex Body Material

- Paint (optional)

Transducer shroud

Aluminum Material

- Powder coated

Enclosure housing

Aluminum Material

- 100 percent conversion coated and exterior coated with a polyurethane enamel

Stainless Steel Material

- Passivated (optional)

Table 3: Body and Flange Maximum Pressure Ratings by Construction Materials [bar meter sizes DN100 to DN600][(1)]

PN	Forged Carbon Steel	Forged 316/316L SS	Duplex SS
50	51.1	49.6	51.7
100	102.1	99.3	103.4
150	153.2	148.9	155.1
200	255.3	248.2	258.6

(1) *Pressure rating information is for –29 °C to +38 °C. Other temperatures may reduce the maximum pressure rating of the materials.*

Table 4: Body and Flange Maximum Pressure Ratings by Construction Materials [psi meter sizes 4 to 24 in.][(1)]

ANSI Class	Forged Carbon Steel	Forged 316/316L SS	Duplex SS
300	740	720	750
600	1,480	1,440	1,500
900	2,220	2,160	2,250
1,500	3,705	3,600	3,750

(1) *Pressure rating information is for –20 °F to +100 °F. Other temperatures may reduce the maximum pressure rating of the materials.*

Flow meter sizing

US Customary units

Table 5 and Table 6 can be used to determine the flow range at reference conditions for all meter sizes. All calculations are based on Schedule 40 bore, 60 °F, and typical gas composition (AGA 8 Amarillo). These values are intended to be a guide in sizing. Prior to order placement, confirm meter sizing with an Emerson Ultrasonics product specialist.

Calculating meter capacity

To calculate a volume rate for a given velocity, first find the capacity (flow rate) in Table 5 or Table 6 for the meter size and operating pressure. Next, multiply the capacity by the ratio of the desired velocity divided by 100 ft/s to obtain the desired volume rate.

The example below illustrates how to determine the hourly flow rate at 70 ft/s for an 8-inch meter operating at 800 psig:

If Flow Rate = 7,842 MSCFH and Velocity = 70 ft/s, the calculation is:

$$\frac{7{,}842\ \text{MSCFH} \times 70\ \text{ft/s}}{100\ \text{ft/s}} = 5{,}489.4\ \text{MSCFH}$$

Table 5: Flow Rates (MSCFH) Based Upon Max Rated Velocity [4 to 24 in. = 100 ft/s]

Meter Size (inches)		4	6	8	10	12	16	20	24
Operating Pressure (psig)	100	252	571	989	1,559	2,213	3,494	5,495	7,948
	200	478	1,086	1,880	2,963	4,207	6,641	10,446	15,108
	300	712	1,616	2,799	4,412	6,263	9,888	15,552	22,493
	400	954	2,164	3,747	5,906	8,384	13,236	20,819	30,111
	500	1,202	2,729	4,725	7,448	10,572	16,690	26,251	37,968
	600	1,459	3,311	5,733	9,037	12,828	20,252	31,854	46,071
	700	1,723	3,911	6,772	10,675	15,153	23,923	37,627	54,422
	800	1,996	4,529	7,842	12,362	17,547	27,703	43,572	63,020
	900	2,276	5,165	8,943	14,096	20,009	31,590	49,686	71,863
	1,000	2,563	5,817	10,073	15,877	22,537	35,581	55,964	80,943
	1,100	2,858	6,486	11,231	17,702	25,128	39,671	62,396	90,246
	1,200	3,159	7,169	12,414	19,567	27,774	43,850	68,969	99,752
	1,300	3,466	7,865	13,619	21,467	30,471	48,107	75,665	109,437
	1,400	3,777	8,571	14,842	23,395	33,208	52,428	82,462	119,267
	1,500	4,092	9,285	16,079	25,344	35,975	56,797	89,333	129,205
	1,600	4,408	10,004	17,323	27,306	38,760	61,193	96,247	139,205
	1,700	4,725	10,724	18,570	29,270	41,548	65,595	103,172	149,221
	1,800	5,041	11,441	19,811	31,227	44,326	69,981	110,069	159,197
	1,900	5,354	12,151	21,041	33,166	47,079	74,327	116,905	169,083
	2,000	5,663	12,852	22,255	35,079	49,793	78,612	123,645	178,832

Table 6: Flow Rates (MMSCFD) Based Upon Max Rated Velocity [4 to 24 in. = 100 ft/s]

Meter Size (inches)		4	6	8	10	12	16	20	24
Operating Pressure (psig)	**100**	6.0	13.7	23.7	37.4	53.1	83.9	131.9	190.8
	200	11.5	26.1	45.1	71.1	101.0	159.4	250.7	362.6
	300	17.1	38.8	67.2	105.9	150.3	237.3	373.2	539.8
	400	22.9	51.9	89.9	141.8	201.2	317.7	499.6	722.7
	500	28.9	65.5	113.4	178.7	253.7	400.6	630.0	911.2
	600	35.0	79.5	137.6	216.9	307.9	486.1	764.5	1,105.7
	700	41.4	93.9	162.5	256.2	363.7	574.2	903.1	1,306.1
	800	47.9	108.7	188.2	296.7	421.1	664.9	1,045.7	1,512.5
	900	54.6	123.9	214.6	338.3	480.2	758.2	1,192.5	1,724.7
	1,000	61.5	139.6	241.7	381.1	540.9	854.0	1,343.1	1,942.6
	1,100	68.6	155.7	269.5	424.8	603.1	952.1	1,497.5	2,165.9
	1,200	75.8	172.1	297.9	469.6	666.6	1,052.4	1,655.3	2,394.0
	1,300	83.2	188.8	326.9	515.2	731.3	1,154.6	1,816.0	2,626.5
	1,400	90.6	205.7	356.2	561.5	797.0	1,258.3	1,979.1	2,862.4
	1,500	98.2	222.9	385.9	608.3	863.4	1,363.1	2,144.0	3,100.9
	1,600	105.8	240.1	415.8	655.3	930.2	1,468.6	2,309.9	3,340.9
	1,700	113.4	257.4	445.7	702.5	997.2	1,574.3	2,476.1	3,581.3
	1,800	121.0	274.6	475.5	749.5	1,063.8	1,679.5	2,641.7	3,820.7
	1,900	128.5	291.6	505.0	796.0	1,129.9	1,783.8	2,805.7	4,058.0
	2,000	135.9	308.4	534.1	841.9	1,195.0	1,886.7	2,967.5	4,292.0

Metric units

Table 7 and Table 8 can be used to determine the flow range at reference conditions for all meter sizes. All calculations are based on Schedule 40 bore, 15 °C, and typical gas composition (AGA-8 Amarillo). These values are intended to be a guide in sizing. Prior to order placement, confirm meter sizing with an Emerson Ultrasonics product specialist.

Calculating meter capacity

To calculate a volume rate for a given velocity, first find the capacity (flow rate) in Table 7 or Table 8 for the meter size and operating pressure. Next, multiply the capacity by the ratio of the desired velocity divided by 30.5 m/s to obtain the desired volume rate.

The example below illustrates how to determine the hourly flow rate at 21 m/s for a DN200 meter operating at 4,500 kPag:

If Flow Rate = 178 MSCMH and Velocity = 21 m/s, the calculation is:

$$\frac{178\ \text{MSCMH} \times 21\ \text{m/s}}{30.5\ \text{m/s}} = 122.6\ \text{MSCMH}$$

Table 7: Flow Rates (MSCMH) Based Upon Max Rated Velocity [DN100 to DN600 = 30.5 m/s]

Meter Size (DN)		100	150	200	250	300	400	500	600
Operating Pressure (kPag)	1,000	10	23	39	62	88	139	218	315
	1,500	58	33	58	91	129	204	320	463
	2,000	19	44	77	121	171	270	425	615
	2,500	24	55	96	151	214	339	533	770
	3,000	29	67	116	182	259	408	642	929
	3,500	35	78	136	214	304	480	754	1,091
	4,000	40	90	156	247	350	553	869	1,257
	4,500	45	103	178	280	397	627	987	1,427
	5,000	51	115	199	314	446	704	1,107	1,600
	5,500	56	128	221	349	495	781	1,229	1,778
	6,000	62	141	244	384	545	861	1,354	1,959
	6,500	68	154	267	420	597	942	1,482	2,143
	7,000	74	168	290	457	649	1,025	1,612	2,331
	7,500	80	181	314	495	702	1,109	1,744	2,523
	8,000	86	195	338	533	757	1,195	1,879	2,718
	8,500	92	209	363	572	812	1,281	2,015	2,915
	9,000	99	224	388	611	867	1,369	2,154	3,115
	9,500	105	238	413	651	924	1,458	2,294	3,318
	10,000	112	253	438	691	981	1,548	2,435	3,522

Table 8: Flow Rates (MMSCMD) Based Upon Max Rated Velocity [DN100 to DN600 = 30.5 m/s]

Meter size (DN)		100	150	200	250	300	400	500	600
Operating Pressure (kPag)	1,000	0.240	0.544	0.941	1.484	2.106	3.325	5.229	7.563
	1,500	0.352	0.799	1.384	2.182	3.097	4.889	7.690	11.122
	2,000	0.467	1.061	1.837	2.895	4.110	6.489	10.206	14.761
	2,500	0.585	1.328	2.300	3.626	5.147	8.126	12.780	18.485
	3,000	0.706	1.602	2.774	4.373	6.207	9.800	15.414	22.293
	3,500	0.829	1.882	3.259	5.137	7.292	11.512	18.107	26.189
	4,000	0.956	2.168	3.755	5.919	8.401	13.264	20.862	30.174
	4,500	1.085	2.461	4.262	6.718	9.536	15.055	23.679	34.248
	5,000	1.216	2.760	4.780	7.535	10.695	16.885	26.558	38.412
	5,500	1.351	3.066	5.309	8.369	11.880	18.755	29.499	42.665
	6,000	1.489	3.378	5.850	9.221	13.089	20.664	32.502	47.009
	6,500	1.629	3.697	6.401	10.090	14.322	22.612	35.565	51.439
	7,000	1.772	4.021	6.963	10.975	15.759	24.596	38.686	55.953
	7,500	1.917	4.351	7.535	11.877	16.859	26.616	41.863	60.549
	8,000	2.065	4.687	8.116	12.793	18.160	28.670	45.094	65.221
	8,500	2.215	5.028	8.706	13.723	19.480	30.754	48.372	69.962
	9,000	2.368	5.373	9.304	14.666	20.818	32.866	51.694	74.766
	9,500	2.521	5.722	9.909	15.619	22.170	35.002	55.053	79.625
	10,000	2.677	6.075	10.519	16.580	23.535	37.157	58.442	84.527

Local LCD display

Each 3410 Series transmitter offers an optional LCD display with a three-line readout that indicates variable name, variable value, and engineering unit. The displays can easily be configurated via MeterLink™ software or Emerson's AMS Trex™ Device with HART® interface protocol.

Figure 2: Optional LCD Displays Scroll the User-selected Variables Noted in Table 9

The local display shows up to 10 items which are user selectable from 26 variables. The display can be configured to scale volume units as actual or 000's, with an adjustable time base of seconds, hours, or days. The scroll rate can be adjusted from 1 to 100 seconds (default 5 seconds).

Table 9: User Selectable Display Variables

Variables	Description
Volumetric flow rate	Uncorrected (actual) Corrected (standard or normal)
Average flow velocity	(no description necessary)
Average speed of sound	(no description necessary)
Pressure	Flowing, if utilized
Temperature	Flowing, if utilized
Frequency output	1A, 1B, 2A, or 2B
Frequency output K-factor	Channel 1 or 2
Analog output	1 or 2
Current day's volume totals	Uncorrected or corrected (forward or reverse)
Previous day's volume totals	Uncorrected or corrected (forward or reverse)
Total volume totals (non-reset)	Uncorrected or Corrected (forward or reverse)

Input/output (I/O)

Table 10: Central Processing Unit (CPU) Module I/O Connections (Maximum Wire Gauge is 18 AWG)

	I/O connection type	Quantity	Description
Serial communications	Serial RS-232/RS-485 port	1	▪ Modbus® RTU/ASCII ▪ 115 kbps baud rate ▪ RS-232/RS-485 full duplex ▪ RS-485 half duplex
	Ethernet port (TCP/IP) 100BaseT	1	▪ Modbus TCP
Digital input(1)	Contact closure	1	▪ Status ▪ Single polarity
Analog inputs(2)	4–20 mA	2	▪ AI-1 temperature(3) ▪ AI-2 pressure(3)
Frequency/digital outputs	TTL/open collector	6	▪ User configurable (can configure digital input as 6th frequency/ digital output)
Analog output(2)(4)	4–20 mA	1	▪ Independently configurable analog output ▪ HART® 7 Compliant, consult factory for HART 5

(1) *The analog-to-digital conversion accuracy is within ±0.05 percent of full scale over the operating temperature range.*
(2) *A 24 Vdc power supply is available to provide power to the sensors.*
(3) *AI-1 and AI-2 are electronically isolated and operate in sink mode. The input contains a series resistance for HART Communicators to be connected for sensor configuration.*
(4) *The analog output zero scale offset error is within ±0.1 percent of full scale and gain error is within ±0.2 percent of full scale. The total output drift is within ±50 ppm of full scale per °C.*

Table 11: Optional I/O Expansion Module

	I/O connection type	Quantity	Description
Serial communications	Serial RS-232/RS-485 port	1	▪ Modbus RTU/ASCII ▪ 115 kbps baud rate ▪ RS-232/RS-485 half duplex
	Ethernet switch	3	▪ 100BaseT ▪ Three ports
Analog input	4–20 mA	1	▪ Reserved for future use

Optional I/O expansion slot: RS-232/RS-485 half duplex, 2-wire, or 1 I/O expansion module.

Diagnostics and software

Significantly reduce time previously spent on data analysis and troubleshooting with the new Smart Meter Verification (SMV) feature now included in the latest meter firmware update. Walk away with more confidence in your measurement with a clear measurement verification result as well as meter and process status results.

Every Ultrasonic flow meter works with advanced MeterLink™ Software to simplify monitoring and troubleshooting. This advanced software displays a number of performance-based diagnostics that indicate meter health. In addition, dynamic flow-based diagnostics help operators identify flow disturbances that may affect measurement uncertainty. The latest version of MeterLink has been optimized to work with Smart Meter Verification, allowing for easy collection of monthly scheduled or on-demand SMV reports.

Figure 3: MeterLink Monitor Screen

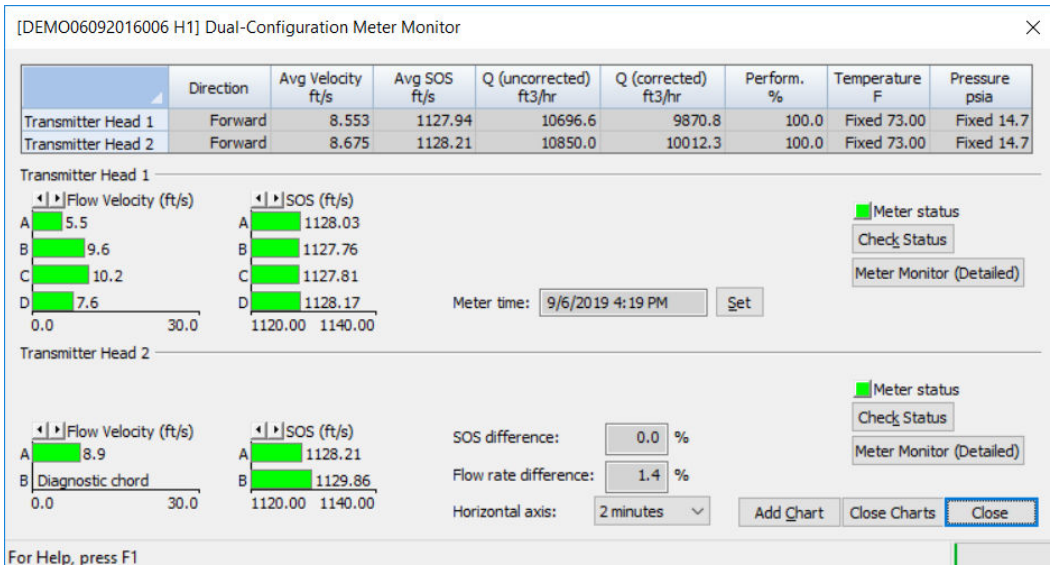

Figure 4: Dual Configuration Comparison Chart

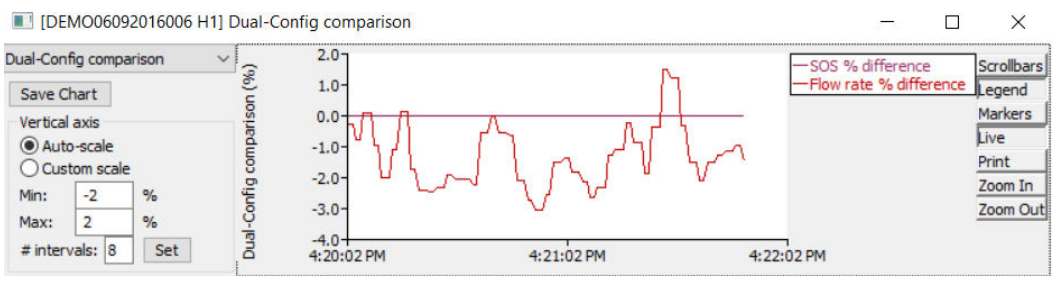

- MeterLink software is downloadable at no charge
- MeterLink is required for transmitter configuration
  — Meter also configurable with AMS Device Manager or Trex™ Device, if HART® is used
- MeterLink connects to meters using Ethernet (recommended), RS232, or RS485 full duplex
- Supports Microsoft® Windows™ 7, 8.1, and 10
- Microsoft Office 2010-2019

Table 12: Features of Meter, MeterLink, and Net Monitor(1)

		Meter	Accessible through MeterLink	Accessible through Net Monitor
SMV	Scheduled or On-Demand Reports (PDF or XML)	•	•	•
	Clear Measurement Verification Results	•	•	•
	Automatic Report Collection by Meter Group			•
	Last scheduled SMV result status multiple meter overview			•

Table 12: Features of Meter, MeterLink, and Net Monitor[1] *(continued)*

		Meter	Accessible through MeterLink	Accessible through Net Monitor
	Bundle all scheduled meter reports		•	•
	Alarm prioritization	•	•	•
Operation	Configurable Modbus GC component data table	•		
	Speed of Sound Comparison[2]	•	•	
	Transducer health monitoring	•	•	
	Baseline Viewer		•	
	Monitor screen		•	
	Multiple charts with green limit bands		•	
	View waveforms		•	
	Speed of Sound Calculator[2]		•	
	Help topics/troubleshooting guidance		•	
	Maintenance logs		•	
History	Hourly logs (180 days) and daily logs (5 years)	•	•	
	Trend maintenance logs		•	
	Hourly/Daily log graphing		•	
Configuration	Field Setup Wizard and Baseline Configuration Wizard		•	
	User name identified on audit log	•	•	
	Write protect switch	•		
	Compare configuration from logs		•	
	GC Master - Modbus serial/TCP	•		
	Modbus TCP slave	•		
Alarms	Alarm/audit/system logs	•	•	
	Bore buildup alarm	•	•	
	Blockage alarm	•	•	
	Abnormal profile alarm	•	•	
	Liquid detection alarm	•	•	
	Latched alarms	•	•	
	Severity alarm display		•	
	Reverse flow alarm	•	•	

(1) *Net Monitor is an application automatically available with MeterLink that allows the user to access and monitor all Ultrasonic Flow Meters that are part of a network.*
(2) *AGA 10 2003 and GERG-2008 (AGA 8 Part 2, 2017) supported.*

Safety and compliance

The Rosemount 3415 and 3416 Gas Ultrasonic Flow Meter meets worldwide industry standards for electrical and intrinsic safety certifications and approvals. For a complete list of agencies and certifications, consult an Emerson Ultrasonics technical specialist.

Safety classifications

Underwriters Laboratories (UL / cUL)

- Hazardous Locations — Class I, Division 1, Groups C, and D

CE Marked to Directives

- Explosive Atmospheres (ATEX)
- Certificate — Demko II ATEX 1006133X
- Marking — Ex II 2G Ex d ia IIB T4 Gb (–40 °C ≤ T ≤ +60 °C)
- Pressure Equipment Directive (PED)
- Electromagnetic Compatibility (EMC)

INMETRO

- Certificate — NCC 11.0163 X
- Marking — Ex d [ia] IIB T4 Gb IP66W

International Electrotechnical Commission (IECEx)

- Marking — Ex d ia IIB T4

Canadian Registration Number

- Certificate — 0F14855

Figure 5: Dual Transducer Shrouds are Standard on DN400 (16 in.) and Larger 3415 and 3416 Flow Meters

Environmental ratings

Aluminum

- NEMA® 4
- IP66 to EN60529

Stainless Steel

- NEMA 4X
- IP66 to EN60529

Metrology approval

OIML[5]

- OIML R137-1&2 Edition 2012(E)
- Class 0.5

MID[5]

- Directive 2014/32/EU (MID MI-002)
- Class 1.0

Measurement Canada[5]

- Approval — AG-0623
- Class 0.5

Figure 6: A Single Transducer Shroud is Standard on DN100 to DN300 (4 to 12 in.) 3415 and 3416 Flow Meters

(5) Metrology approval only applies to 4-path meter.

Operation limits

Smaller diameter meters are less affected by lower minimum pressures than larger diameter meters. For example, under certain conditions, a DN200 (8 in.) diameter meter may be able to operate at a velocity higher than 50 ft/s at 50 psig. Consult an Emerson Ultrasonics product specialist if requirements are outside of the operation limits shown below for T-21/T-41/T-22 transducers.

Table 13: Recommended Maximum Velocity (US Customary Units)

Nominal MeterSize (inches)	Maximum Velocity Rating at 50 psig (ft/s)(1)	Capacity between 50 and 100 psig (ACFH)	Maximum Velocity Rating at 100 psig (ft/s)(1)	Capacity at Max Rated Velocity (ACFH)	Schedule STD Bore (inches)
4	50	15,913	100	31,826	4.026
6	50	36,113	100	72,226	6.065
8	50	62,534	100	125,068	7.981
10	50	98,568	100	197,136	10.020
12	50	141, 372	100	282,743	12.000
16	50	228,318	100	456,635	15.250
20	50	363,799	100	727,598	19.250
24	50	530,696	100	1,061,392	23.250

(1) *Qmax maximum velocity generally increases linearly with increase in minimum pressure (i.e.,: 50 psig = 50 ft/s, 75 psig = 75 ft/s, 100 psig = 100 ft/s) for 8 to 24 in. meters.*

Table 14: Recommended Maximum Velocity (Metric Units)

Nominal Meter Size (DN)	Maximum Velocity Rating at 345 kPa (m/s)(1)	Capacity between 345 and 689 kPa (ACMH)	Maximum Velocity Rating at 689 kPa (m/s)(1)	Capacity at Max Rated Velocity (ACMH)	Schedule STD Bore (millimeters)
100	15.2	450	30.5	901	102.2
150	15.2	1,022	30.5	2,045	154
200	15.2	1,779	30.5	3,541	202.7
250	15.2	2,791	30.5	5,582	254.5
300	15.2	4,003	30.5	8,006	303.2
400	15.2	6,465	30.5	12,930	381
500	15.2	10,301	30.5	20,603	477.9
600	15.2	15,027	30.5	30,055	574.7

(1) *Qmax maximum velocity generally increases linearly with increase in minimum pressure (i.e.,: 345 kPa = 15 m/s, 520 kPa = 23 m/s, 690 kPa = 30 m/s) for DN200 to DN600 meters.*

Figure 7: H_2S Limits by Temperature and Pressure for Ultrasonics T-20 Series Transducers

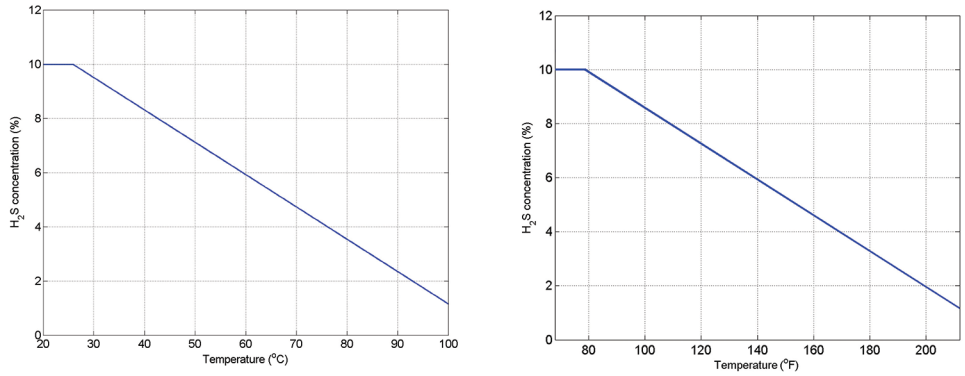

Weights and dimensions

Figure 8: Dimensions of Enclosure Housing

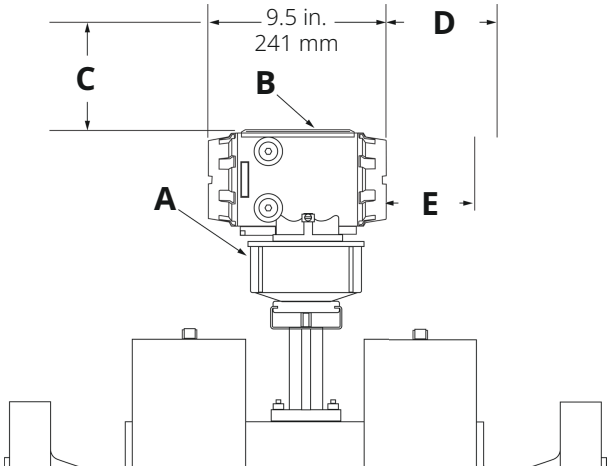

A. Enclosure base
B. Enclosure housing
C. 2 in. (51 mm) Removal
D. 4.75 in. (121 mm) Board removal
E. 1.75 in. (44 mm) Endcap removal

Figure 9: Additional Dimensions of Enclosure Housing

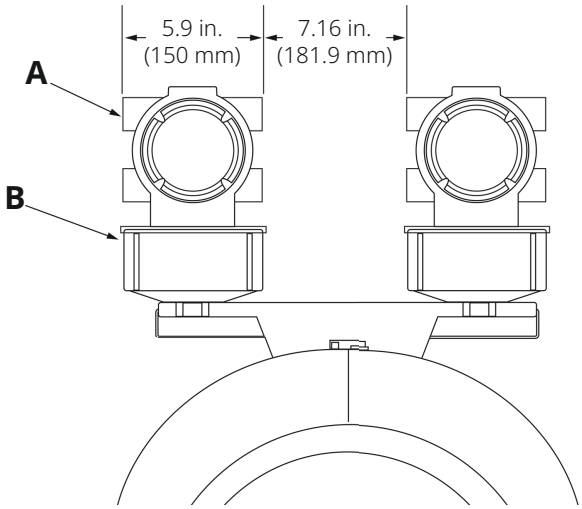

A. Enclosure housing
B. Enclosure base

Figure 10: Overhead View of Meter

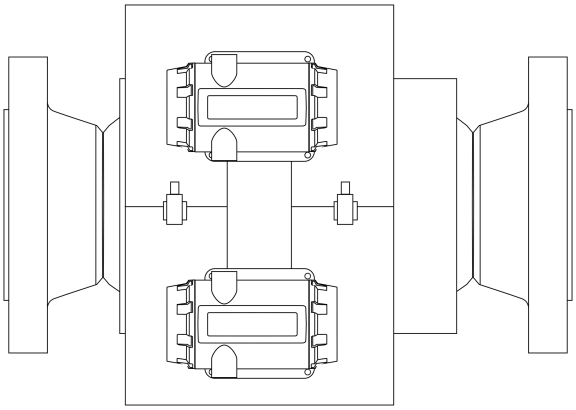

Figure 11: Dimension Key for DN100 to DN300 (4 to 12 in.) Meters with Single Transducer Shroud

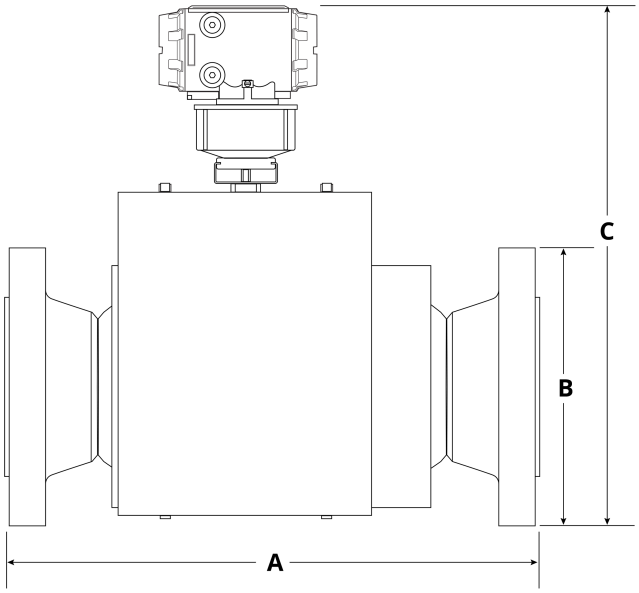

To determine the values of A, B, and C, see Table 15 and Table 16.

Figure 12: Dimension Key for DN400 and Larger (16 in. and Larger) Meters with Dual Transducer Shrouds

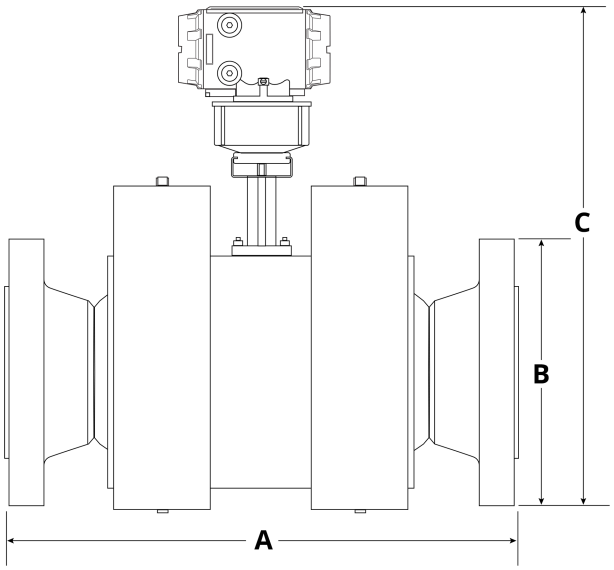

To determine the values of A, B, and C, see Table 15 and Table 16 .

Tables

The Meter Dimension Key diagram (Figure 11 and Figure 12) illustrates the meter component measurements that correspond to A, B, and C in the chart below. All weights and dimensions are based on the standard electronics enclosure. The certified approval drawing will include the actual weights and dimensions.

Table 15: Weights and Dimensional Data (US Customary Units)

Nominal Line Size (inches)		4	6	8	10	12	16	20	24	30	36
300 ANSI	Weight (lb.)	1029	1425	1250	1700	1700	220	3200	4800	5050	6300
	A (in.)	44.5	49	35.3	39.8	36.5	37.5	42.8	47.5	44.5	46.5
	B (in.)	9.9	12.4	15	17.5	20.5	25.5	30.5	36	43	50
	C (in.)	28.2	30.2	31.1	33.1	35.5	39.5	44.3	49.3	55.9	62.5
600 ANSI	Weight (lb.)	1061	1523	1350	1850	1900	2400	3700	5300	5800	7350
	A (in.)	46.25	51	37.5	43	39	40.5	45.5	50.8	48	50.3
	B (in.)	10.7	13.9	16.5	20	22	27	32	37	44.5	51.8
	C (in.)	28.2	30.2	31.5	34.2	36.3	40.3	45	49.8	56.6	63.4
900 ANSI	Weight (lb.)	1109	1627	1580	2230	2560	3580	5110	7930	10300	15230
	A (in.)	47.88	53.38	41.25	49.25	48.75	51	53.12	62.13	61.5	67
	B (in.)	11.4	14.9	18.5	21.5	24	27.8	33.8	41	48.5	57.5
	C (in.)	28.2	30.2	32.3	35	37.4	41	46.2	51.9	60	68.5
1500 ANSI	Weight (lb.)	1144	1725	1780	2722	3380	5130	7410	11430	CF	CF
	A (in.)	48.63	56	45.5	55	55.8	59	62	71.5	CF	CF

Table 15: Weights and Dimensional Data (US Customary Units) *(continued)*

Nominal Line Size (inches)		4	6	8	10	12	16	20	24	30	36
	B (in.)	12.2	15.4	19	23	26.5	32.5	38.8	46	CF	CF
	C (in.)	28.2	30.2	32.5	35.7	38.7	43.4	48.7	54.4	CF	CF

Table 16: Weights and Dimensional Data (Metric Units)

Nominal Line Size (DN)		100	150	200	250	300	400	500	600	750	900
PN 50	Weight (kg)	466	658	567	771	771	998	1452	2177	2291	2858
	A (mm)	1130.3	1244.6	897	1011	927	953	1087	1207	1130	1181
	B (mm)	252	315	381	445	521	648	775	914	1092	1270
	C (mm)	715.3	766	790	841	902	1004	1125	1252	1420	1588
PN 100	Weight (kg)	481	690	612	839	862	1089	1678	2404	2631	3334
	A (mm)	1174.7	1295.4	953	1093	991	1029	1156	1290	1219	1278
	B (mm)	271.5	353.2	419	508	559	686	813	940	1130	1316
	C (mm)	715.3	766	800	867	922	1023	1143	1265	1438	1610
PN 150	Weight (kg)	503	738	717	1012	1162	1624	2318	3597	4672	6908
	A (mm)	1216.1	1355.8	1049	1252	1201	1295	1349	1577	1562	1072
	B (mm)	289.7	378.6	470	546	610	706	859	1041	1232	1461
	C (mm)	715.3	766	820	889	950	1044	1174	1318	1524	1740
PN 250	Weight (kg)	518	782	807	1235	1533	2327	3361	5185	CF	CF
	A (mm)	1235.2	1422.4	1156	1397	1379	1499	1575	1816	CF	CF
	B (mm)	308.7	391.3	483	584	673	826	986	1168	CF	CF
	C (mm)	715.3	766	826	907	983	1102	1237	1382	CF	CF

CF: Consult factory

Recommended installation

Recommended Pipe Lengths

The drawings below represent the manufacturer's recommended minimum pipe lengths for installation of 3415 and 3416 Gas Ultrasonic Flow Meters. The final recommendations are dependent upon application requirements that must be specified by the customer. Other lengths and flow conditioners can be accommodated.

Figure 13: Piping Recommendation for Gas Ultrasonic Meter (No Flow Conditioner)

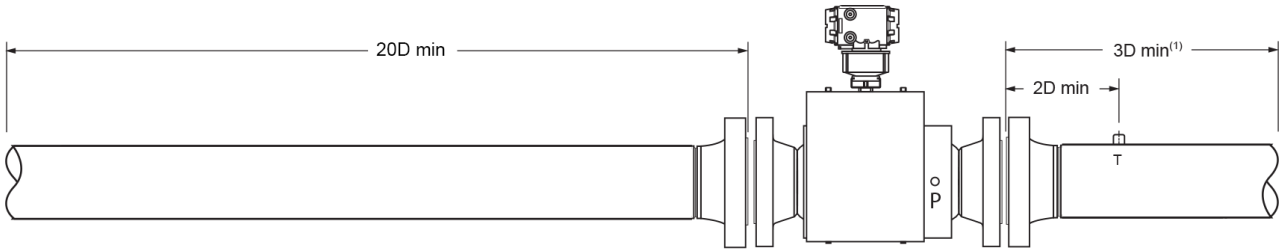

(1) Additional pipe length may be required for additional taps (i.e., sample probe, test well, etc.).

Figure 14: Piping Recommendation for Gas Ultrasonic Meter with a Flow Conditioner

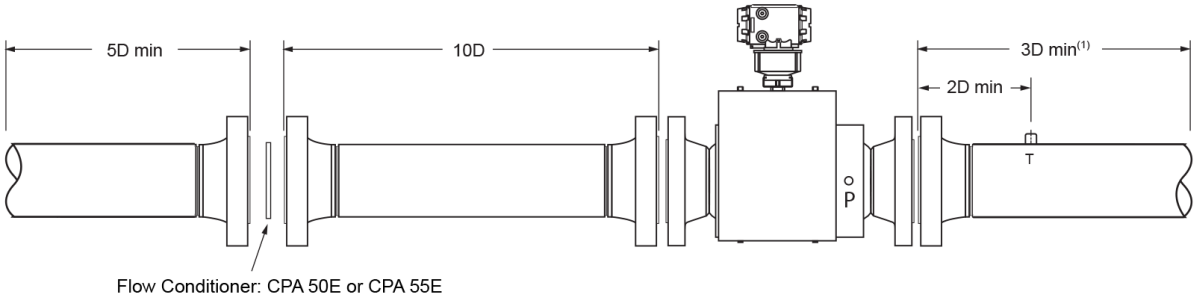

(1) Additional pipe length may be required for additional taps (i.e., sample probe, test well, etc.).

Figure 15: Piping Recommendation for Gas Ultrasonic Meter with a Flow Conditioner (Compact Installation)

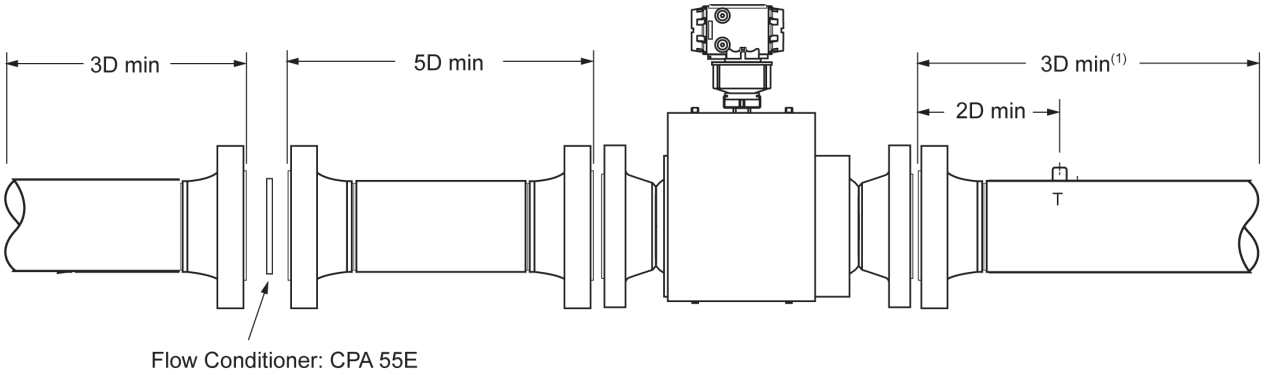

(1) Additional pipe length may be required for additional taps (i.e., sample probe, test well, etc.).

Figure 16: Piping Recommendation for Bi-directional Gas Ultrasonic Meter with Flow Conditioners (Compact Installation)

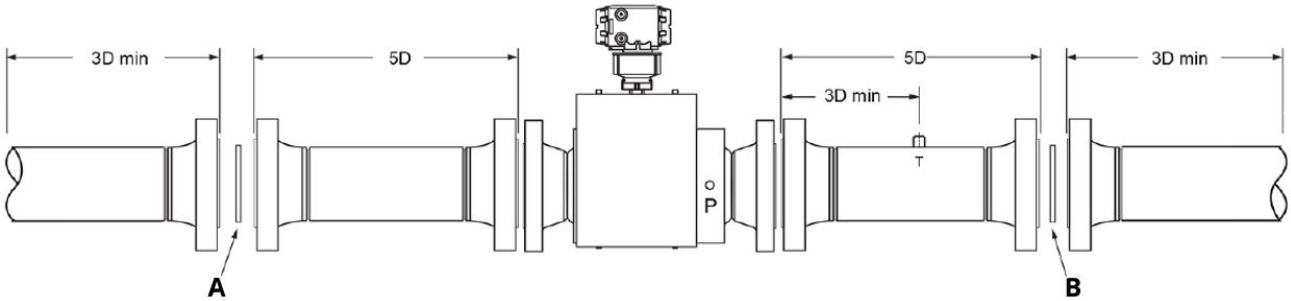

Longer upstream lengths can increase long term baseline diagnostics stability. This configuration is not applicable to OIML installations.

A. Profiler, CPA 50E or CPA 55E
B. Profiler, CPA 50E or CPA 55E

Note

- For best results, flow conditioning is recommended
- D = Nominal pipe size in inches (i.e., 8 in. pipe size; 10D = 80 in.)
- T = Temperature measurement location
- Pressure measurement location provided on meter body

Configuration code

This is an example of a configurator code. This is for informational purposes only. Not every option is listed and some options are contingent on others. Consult factory for assistance designing your optimal meter.

3416	08	03	S01	F	080	L	2	1	2	A	J	C	G	B	3	2	3	3	B
A	B	C	D	E	F	G	H	I	J	K	L	M	N	O	P	Q	R	S	T

A. Device (see Table 17)
B. Line size (see Table 18)
C. Pressure rating (see Table 19)
D. Flange type (see Table 20)
E. Body and flange material (see Table 21)
F. Schedule (pipe bore) (see Table 22)
G. Transducer assembly (see Table 23)
H. Enclosure type (see Table 24)
I. Pressure taps (see Table 25)
J. Conduit type (see Table 26)
K. Electronics mounting (see Table 27)
L. CPU/Display/Keys (see Table 28)
M. Transmitter Head 1 Expansion module (see Table 29)
N. Transmitter Head 2 Expansion module (see Table 30)
O. Wireless (see Table 31)
P. Tagging format (for all tags) (see Table 32)
Q. Tagging language (see Table 33)
R. Pressure Directive Certification (see Table 34)
S. Electrical approvals (see Table 35)
T. Metrology approval (see Table 36)

Table 17: Device

Code	Description
3415	3415 Custody/Check Meter
3416	3416 Custody/Check Meter + Diagnostic

Table 18: Line Size

Code	Description
04	DN100 (4 in.)
06	DN150 (6 in.)
08	DN200 (8 in.)
10	DN250 (10 in.)
12	DN300 (12 in.)
16	DN400 (16 in.)
20	DN500 (20 in.)
24	DN600 (24 in.)

Table 19: Pressure Rating

Code	Description
03	PN 50/ANSI 300
05	PN 100/ANSI 600
06	PN 150/ANSI 900

Table 19: Pressure Rating *(continued)*

Code	Description
07	PN 250/ANSI 1500

Table 20: Flange Type

Code	Description
S01	RF/RF
S02	RTJ/RTJ
S03	FEFA/FEFA

Table 21: Body and Flange Material

Code	Description
F(1)	Forged: Carbon Steel/316 SS/Duplex SS

(1) *Consult factory for specific model code for desired material.*

Table 22: Schedule (Pipe Bore)

Code	Description
LW0	Schedule LW
020	Schedule 20
030	Schedule 30
040	Schedule 40
060	Schedule 60
080	Schedule 80
100	Schedule 100
120	Schedule 120
140	Schedule 140
160	Schedule 160
STD	Schedule STD
XS0	Schedule XS
XXS	Schedule XSS

Table 23: Transducer Assembly(1)

Code	Description
A	T-22/T-41 (–50 °C to +100 °C) - Low Pressure Standard Mounts/Holders, NBR O-ring
B	T-22/T-41 (–50° C to +100° C) - Low Pressure Inconel® Mounts/316L Holders, NBR O-ring
C	T-22/T-41 (–40° C to +100° C) - Low Pressure Inconel Mounts/Inconel Holders, FKM O-ring
D	T-22/T-41 (–40° C to +100° C) - Low Pressure Inconel Mounts/316L Holders, FKM O-ring
F	T-22/T-21 (–20 °C to +100 °C) - Low Pressure Inconel Mounts/316L Holders, FKM O-ring
G	T-21 (–20 °C to +100 °C) - Standard Mounts/Holders, NBR O-ring
H	T-22/T-41 (–50 °C to +100 °C) - Standard Mounts/Holders, NBR O-ring
I	T-22/T-21 (–20° C to +100° C) - Low Pressure Standard Mounts/Holders, NBR O-ring
J	T-22/T-21 (–20 °C to +100 °C) - Low Pressure Standard Mounts/Holders, NBR O-ring

Table 23: Transducer Assembly[1] *(continued)*

Code	Description
K	T-22/T-41 (–50° C to +100° C) - Inconel Mounts/316L Holders, NBR O-ring
L	T-21 (–20 °C to +100 °C) - Inconel Mounts/Inconel Holders, FKM O-ring
M	T-22/T-41 (–40 °C to +100 °C) - Inconel Mounts/Inconel Holders, FKM O-ring
N	T-41 (–50 °C to +100 °C) - Standard Mounts/Holders, NBR O-ring
O	T-21 (–20° C to +100° C) - Inconel Mounts/316L Holders, FKM O-ring
Q	T-41 (–50° C to +100° C) - Inconel Mounts/316L Holders, NBR O-ring
R	T-22/T-21 (–20° C to +100° C) - Inconel Mounts/316L Holders, FKM O-ring
S	T-41 (–40° C to +100° C) - Inconel Mounts/Inconel Holders, FKM O-ring
T	T-22/T-41 (–40° C to +100° C) - Inconel Mounts/316L Holders, FKM O-ring
U	T-21/T-22 (–20 °C to +100 °C) - Standard Mounts/Holders, NBR O-ring
V	T-22/T-21 (–20° C to +100° C) - Inconel Mounts/316L Holders, NBR O-ring
W	T-21/T-22 (–20 °C to +100 °C) - Inconel Mounts/Inconel Holders, FKM O-ring
Y	T-22/T-21 (–20° C to +100° C) - Low Pressure Inconel Mounts/316L Holders, NBR O-ring
Z	T-22/T-21 (–20 °C to +100 °C) - Low Pressure Inconel Mounts/Inconel Holders, FKM O-ring

(1) *T-21 and T-41 transducers are the only transducers available for the single-path check meter.*

Table 24: Enclosure Type

Code	Description
1	Standard Aluminum
2	Optional Stainless Steel

Table 25: Pressure Taps

Code	Description
1	½ in. NPT
3	Pipette

Table 26: Conduit Type

Code	Description
1	¾ in. NPT
2	M20 (reducers required)

Table 27: Electronics Mounting

Code	Description
A	Integral mount

Table 28: CPU/Displays

Code	Description
J	I/O Type 4 (6 Frequency/Digital Outputs, 1 Analog Output)
K	I/O Type 4 (6 Frequency/Digital Outputs, 1 Analog Output)/Displays

Table 29: Transmitter Head 1 Expansion Module

Code	Description
A	None
B	Serial RS232
C	Serial RS485
D	Expansion I/O module

Table 30: Transmitter Head 2 Expansion Module

Code	Description
A	None
B	Serial RS232
C	Serial RS485
G	Expansion I/O Module

Table 31: Wireless

Code	Description
A	None
B	THUM

Table 32: Tagging Format

Code	Description
1	Inch/ANSI/US Customary
2	Inch/ANSI/Metric
3	DN/PN/US Customary
4	DN/PN Metric

Table 33: Tagging Language

Code	Description
1	English
2	French
3	Russian
4	Chinese

Table 34: Pressure Directive Certification

Code	Description
1	None
2	PED (must select electrical approval 2)
3	CRN (Canadian Boiler Branch)
4	Russia (EAC)

Table 35: Electrical Approvals

Code	Description
1	UL/c-UL
2	ATEX/IECEx
3	INMETRO
4	Russia (EAC)

Table 36: Metrology Approval

Code	Description
A	None
B	European Union - MID Directive
C	China
F	Russia (EAC)

00813-0500-3104
Rev. AD
May 2025

For more information: **Emerson.com/global**

©2025 Emerson. All rights reserved.

Emerson Terms and Conditions of Sale are available upon request. The Emerson logo is a trademark and service mark of Emerson Electric Co. Rosemount is a mark of one of the Emerson family of companies. All other marks are the property of their respective owners.

ROSEMOUNT™

EMERSON™