Operating Instructions

Series 20000 Motor Driven Reels

E23012	E23018	E23022
E23012 310	E23018 310	E23022 310
E23012 H	E23018 H	E23022 H
E23012 H 310	E23018 H 310	E23022 H 310

Dimensional Data

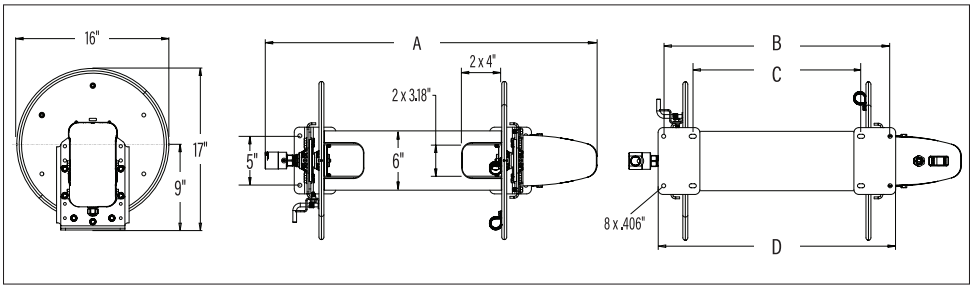

	12" Spool	18" Spool	22" Spool
A	28"	34"	38"
B	16 7/8"	22 7/8"	26 7/8"
C	11"	17"	21"
D	18"	24"	28"

Safety Precautions

Personal injury and/or equipment damage may result if proper safety precautions are not observed.

- Ensure that the reel has been properly installed before connecting supply line (see installation instructions).
- Bleed fluid/gas pressure from system before servicing reel.
- Before connecting reel to supply line ensure that supply line pressure does not exceed maximum rated working pressure of reel.
- Do not play pranks on other personnel. Even low pressure is very dangerous and can cause irrepairable damage or death.
- Do not wear loose fitting clothing while operating reel.
- Be aware of other personnel in work area.
- Be aware of other machinery in work area.
- If a leak occurs in the hose or reel, remove supply line pressure immediately.
- Treat and respect a hose reel as any other piece of machinery, observing all common safety practices.

Helpful Resources

Form# 1321-825 Rev: 3/2026

Reelcraft Industries, Inc.
2842 E Business Hwy 30, Columbia City, IN 46725
855-634-9109 • feedback@reelcraft.com • www.reelcraft.com

REELCRAFT®

INSTALLATION INSTRUCTIONS

Inspection

Unpack and inspect the reel for damage. Turn the reel by hand to check for smooth operation. Check for completeness. A mounting template with instructions is included on the product packaging to mark the required (8) hole locations.

Mounting of all hose reels

NOTE: Ensure that mounting surface is flat to prevent binding on reel after it is mounted.

1. Four 0.406" diameter mounting holes (8 total) are located at the base of each side support panel (2 each). Mount reel using eight (customer supplied) bolts; tightening them securely to ensure a solid, rigid attachment.

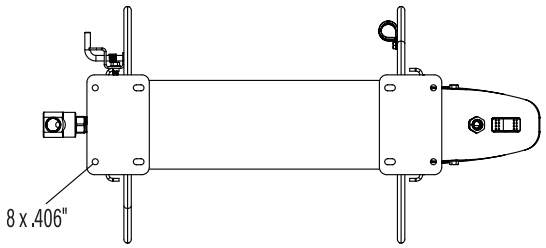

2. Perform the following steps only after all other installation steps, pertaining to your particular reel, are accomplished.
   NOTE: A flexible hose connection must be used to compensate for any offset between the supply line and the reel swivel.
3. Apply thread compound to all threads.
4. Thread male connector of supply line into swivel. Tighten securely.

Wiring

CAUTION: Remove all electrical power when wiring. Do not "hot-wire". Observe all applicable NEC/OSHA requirements.

1. From the supply voltage (12 V DC, 240 W) install a 20 amp auto-resetting circuit breaker (preferred) or a 20 amp fast-acting fuse in-line.
2. To change winding direction, swap the incoming power.

Connecting the hose

CAUTION: Do not connect the hose to the fluid path until after hose reel has been installed. Fully extend and pressurize hose before winding on to reel. Momentarily open control valve, when initially pressurizing, to purge hose of gases. When fluid appears at control valve, close valve. This prevents flattening of the hose and excessive pressure on the drum when fluid supply is reinitialized at a later time.

1. Apply thread compound to all threads.
2. Hand thread male hose connector into fluid path.
3. Using a wrench, firmly hold onto fluid path while tightening hose connector.

OPERATING INSTRUCTIONS

WARNING-PREVENT STATIC

SPARKING: When working around flammable liquids such as solvents, paints, chemicals or petroleum products, ensure that the hose reel, hose and the equipment being serviced are properly grounded. Use grounded hose(s) (static wire). Use an ohmmeter to check continuity of the ground circuit. Fire and/or explosion can result if proper grounding is not achieved. Keep hands clear. Do not wear loose fitting clothing. Pull hose from the reel by grasping the hose itself, not the control handle or swivel.

SERVICE INSTRUCTIONS

Replacing the Hose

1. Using a wrench, firmly hold onto the fluid path while removing hose connector.
2. Follow procedures for "Connecting the hose" (refer to installation instructions).

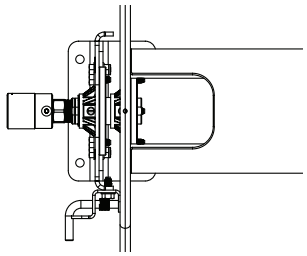

Replacing the Swivel

CAUTION: Remove supply line pressure before performing the following procedure.

1. Remove supply line from swivel.
2. Remove swivel assembly from fluid path.
3. Install swivel assembly to fluid path by reversing steps 1 and 2. Apply thread compound to all threads.

ADJUSTMENT PROCEDURES

Adjusting the Reel Drag Brake

Loosen or tighten set screw on hub on one or both sides of the reel.

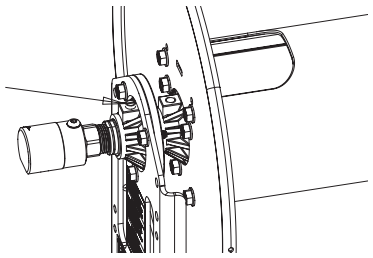

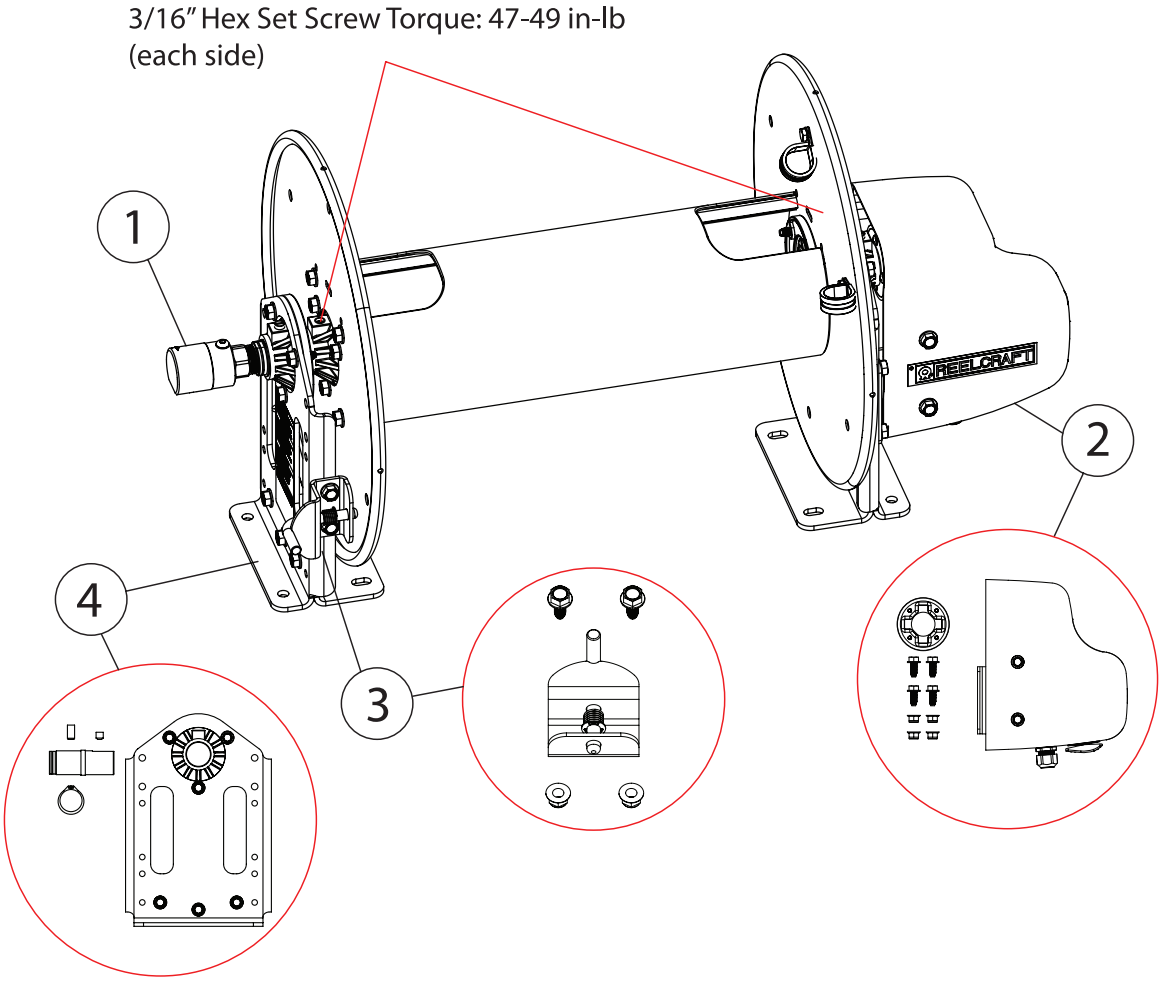

Gray Powder Coat Finish Reel

ITEM	DESCRIPTION	QTY.	E23012	E23012 H	E23018	E23018 H	E23022	E23022 H
1	STAINLESS STEEL 316 SWIVEL FKM	1	S602378-2		S602378-2		S602378-2	
1	PLATED CARBON STEEL SWIVEL FKM	1		S602026-2		S602026-2		S602026-2
2	MOTOR AND WIRE HARNESS KIT	1	S602985	S602985	S602985	S602985	S602985	S602985
3	LATCH PIN KIT	1	S602971	S602971	S602971	S602971	S602971	S602971
4	UPRIGHT, HUB & SHAFT KIT	1	S602981	S602981	S602981	S602981	S602981	S602981

Unfinished Reel

ITEM	DESCRIPTION	QTY.	E23012 310	E23012 H 310	E23018 310	E23018 H 310	E23022 310	E23022 H 310
1	STAINLESS STEEL 316 SWIVEL FKM	1	S602378-2		S602378-2		S602378-2	
1	PLATED CARBON STEEL SWIVEL FKM	1		S602026-2		S602026-2		S602026-2
2	MOTOR AND WIRE HARNESS KIT	1	S602985	S602985	S602985	S602985	S602985	S602985
3	LATCH PIN KIT	1	S602971 310	S602971 310	S602971 310	S602971 310	S602971 310	S602971 310
4	UPRIGHT, HUB & SHAFT KIT	1	S602981 310	S602981 310	S602981 310	S602981 310	S602981 310	S602981 310