IMI SENSORS
A PCB DIVISION

Model 682C05

Platinum Stock Products; Bearing Fault Detector (BFD), DIN rail mount vibration transmitter (for use w/ICP sensor), dual 4-20 mA outputs for overall and peak vibration

Installation and Operating Manual

For assistance with the operation of this product,
contact the PCB Piezotronics, Inc.

Toll-free: 800-959-4464
24-hour SensorLine: 716-684-0001
Fax: 716-684-3823
E-mail: imi@pcb.com
Web: www.imi-sensors.com

Total Customer Satisfaction
IMI SENSORS
A PCB PIEZOTRONICS DIV.

IMI SENSORS
A PCB PIEZOTRONICS DIV.

SENSORS AND INSTRUMENTATION FOR MACHINE CONDITION MONITORING

Model 682C05 Bearing Fault Detector

CE

Operating Guide with Enclosed Warranty Information

3425 Walden Avenue, Depew, New York 14043-2495

Phone (716) 684-0003

Fax (716) 684-3823

Toll Free Line 1-800-959-4IMI

MANUAL NUMBER: 53377
*MANUAL REVISION: **C***
ECN NUMBER: 50130

Table of Contents

Introduction ..... *Page 3*

General Features

Installation and Wiring ..... *Page 4*

Configuring the 682C05 ..... *Page 8*

ESD Sensitivity ..... *Page 10*

Warranty/Servicing

Warranty, Service & Return Procedure ..... *Page 11*

Customer Service ..... *Page 12*

Introduction

The Model 682C05 is a 4-20mA Din Rail Signal Conditioner designed to interface with IMI Sensor's ICP® accelerometer for bearing fault detection. Specifically, the 682C05 detects high frequency impacts related to bearing fault/lube starvation and provides a 4-20mA signal proportional to the magnitude of vibration. From the same sensor, the device also converts overall vibration to a 4-20mA signal, which is used for traditional machine diagnostics and predictive maintenance such as out of balance and misalignment.

General Features

- Early detection of high frequency impact faults related to bearing failure and lube starvation.
- External transmitters, signal conditioners, and ICP® power supplies can be eliminated by direct connection of the sensor to the Din Rail Signal Conditioner.
- 18Vdc/4mA excitation to power sensor.
- Dual 4-20mA Output Signals for Bearing Fault and Overall Vibration.
- Selectable High Pass filtering for Bearing Fault Detection.
- Overall Output Vibration Ranges include:

Acceleration (g's)	Velocity (in/sec)
5.00	0.50
10.00	1.00
20.00	2.00

- Internal DIP switch selection for Peak or RMS on Overall Vibration.
- Analog output signal connections (RV) for conducting additional frequency analysis.
- Removable Terminal Blocks for easy wiring.
- 35mm (1.38in.) Din Rail Mount configuration.
- Space saving 22.5mm (0.9in.) wide design.

Installation and Wiring

Installation

The Model 682C05 is designed to be mounted on a 35mm Din Rail. Do not install in a harsh area where it can be exposed to cleaning fluids or machine oils. IMI Sensors recommends mounting the 682C05 in a type NEMA 4 enclosure similar to the Model 682A00 to protect the electronics from contamination.

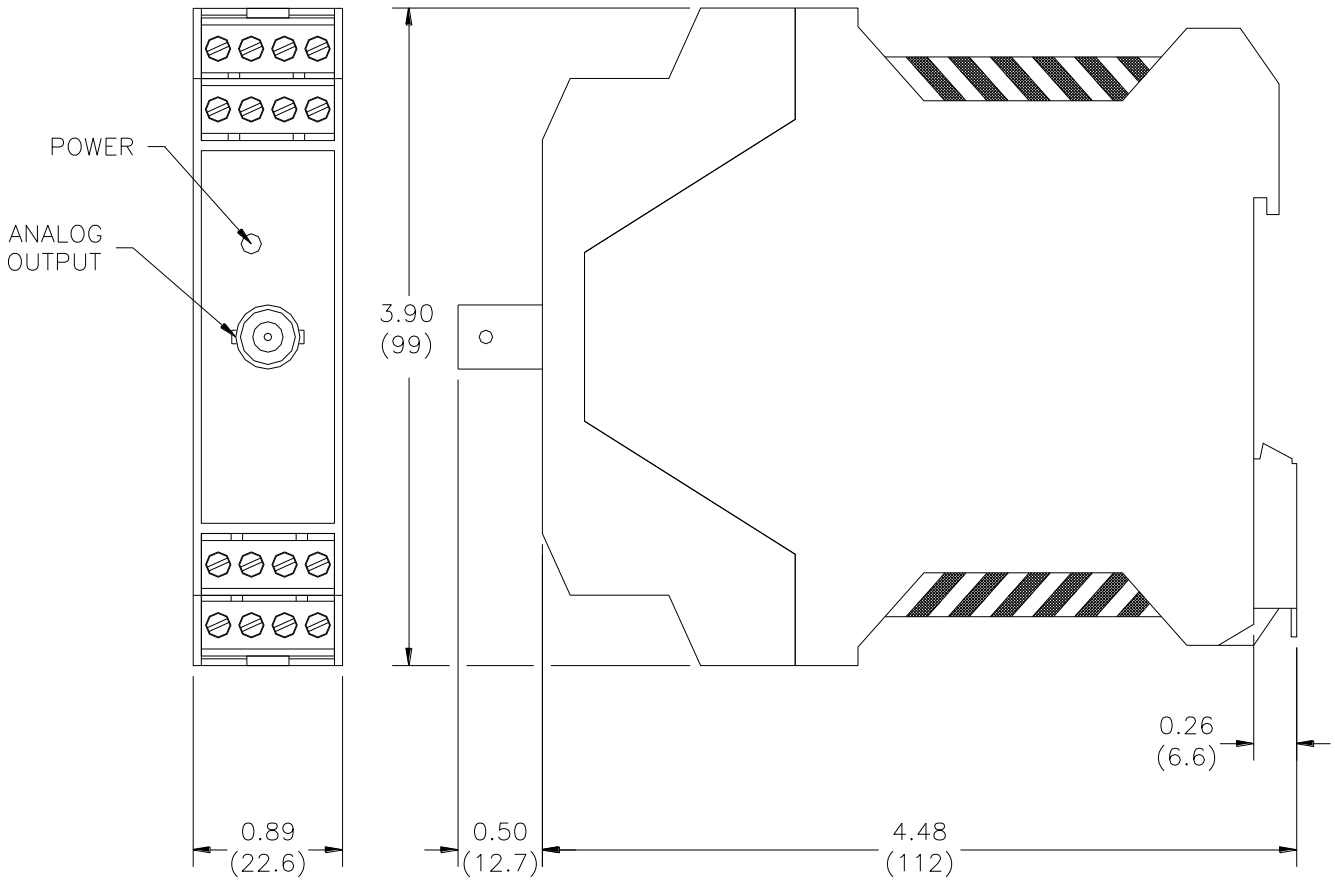

Dimension Drawing

Inch (mm)

Connector and Pinout Diagram

The 682C05 uses plug-in type screw terminal connectors for all input and output connections.

Strip off 8mm of insulation from the connection wire ends. Using a screwdriver, remove the terminal block from the enclosure in either the up or down direction, terminate the wire in the correct location. Do not exceed a torque of 0.5Nm. Re-install the terminal block.

This easy to assemble connection method allows devices to be exchanged easily and the electrical connection to be visibly isolated.

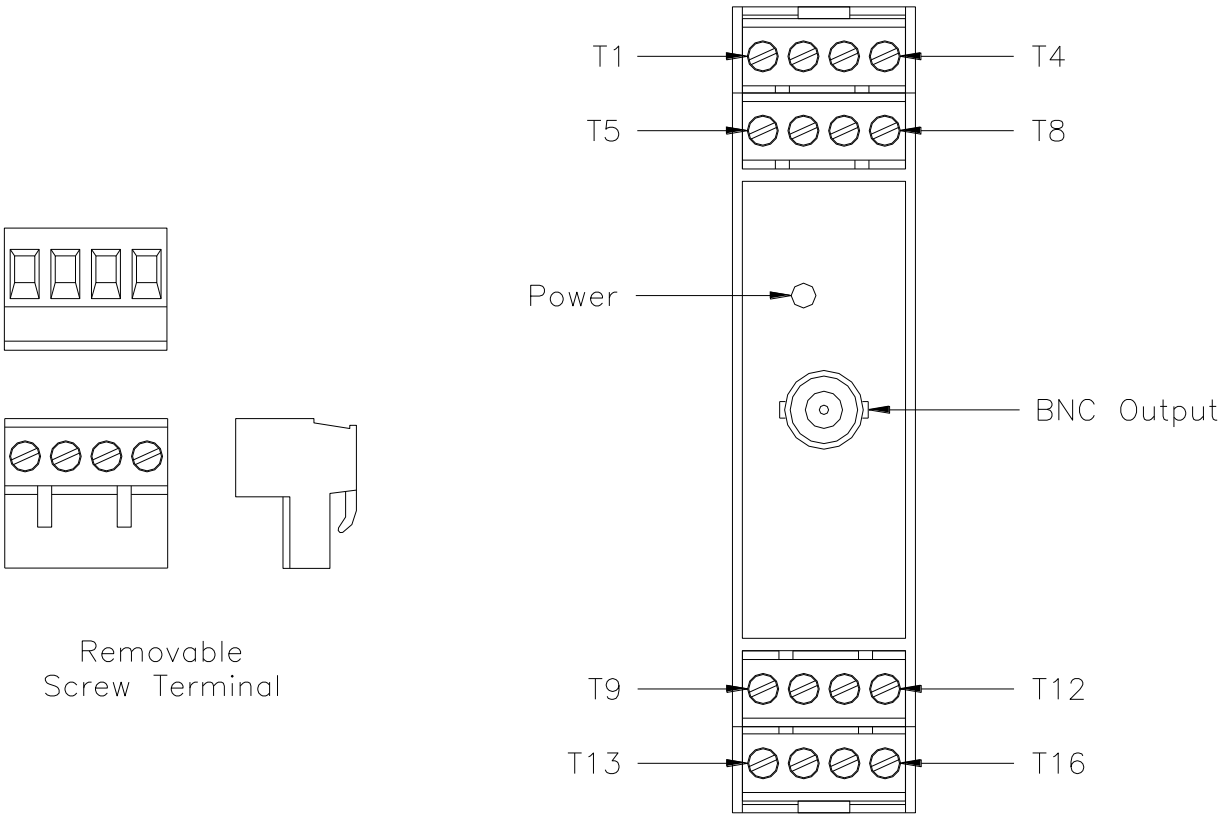

Pin Location Diagram

WARNING

AC and DC input signals and power supply voltages could be hazardous. DO NOT connect live wires to screw terminal plugs, and DO NOT insert, remove, or handle screw terminal plugs with live wires connected.

Pin Descriptions:

DC Power – Pins 1 through 4:

Pin 1 +Power
Pin 2 -Power/Common
Pin 3 Earth Ground
Pin 4 No Connection

ICP® Accelerometer – Pins 5 through 8:

Pin 5 + ICP® Accelerometer
Pin 6 - ICP® Accelerometer
Pin 7 Shield
Pin 8 No Connection

Raw Vibration (RV) – Pins 9 through 12, and BNC Jack:

Pin 9 + RV
Pin 10 - RV
Pin 11 No Connection
Pin 12 No Connection

4 to 20mA Fault Detector Output – Pins 13 & 14:

Pin 13 + 4 to 20mA Fault Output
Pin 14 - 4 to 20mA Fault Output

4 to 20mA Overall Vibration Output – Pins 15 & 16:

Pin 15 + 4 to 20mA Vibration Output
Pin 16 - 4 to 20mA Vibration Output

Notes:

- Pins 3 and 7 are tied together but are NOT tied to the grounding tab on the back of the enclosure.
- Land the accelerometer cable's shield on Pin 7.
- Tie Pin 3 to either din rail ground or Earth ground with the use of an external wire.

IMI SENSORS
A PCB PIEZOTRONICS DIV.

Typical Wiring Diagram

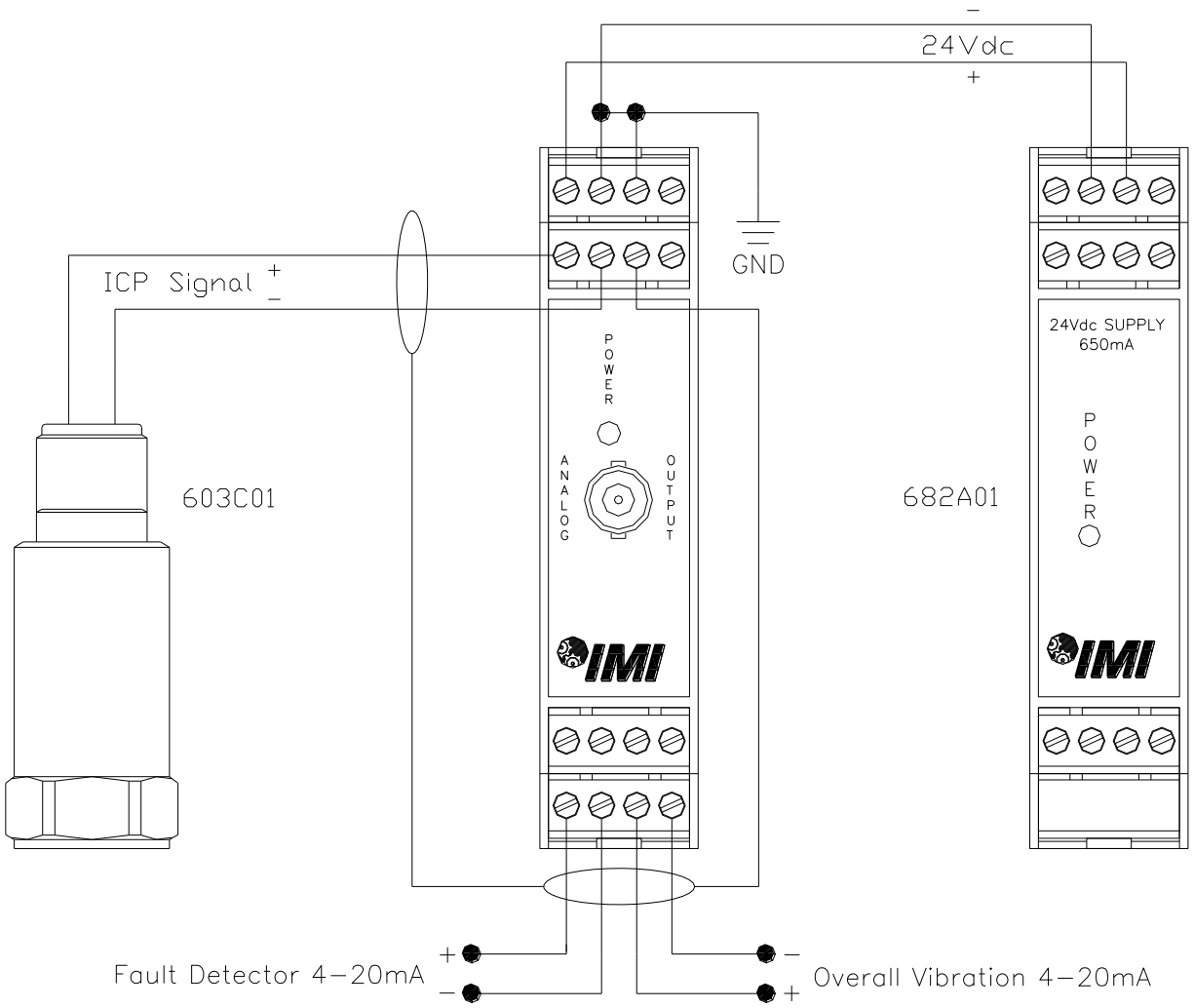

Note: If using the 682A01, mount the 682C05 to the left side of the power supply (as shown) with a recommended minimum separation distance of 4” where applicable.

Configuring the 682C05

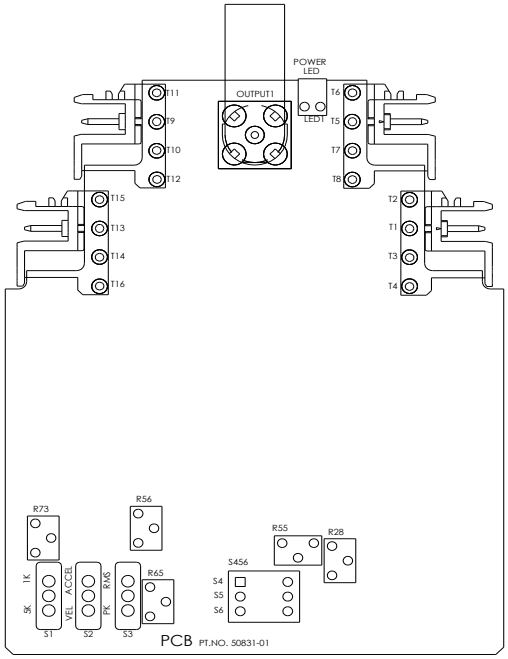

Internal PC Board Diagram

The Internal PC Board Diagram shows the location of the internal DIP and Slide switches. The switches are used to configure the 682C05 for various sensor and vibration ranges.

The PC Board is accessible through the front of the conditioner by removing the Screw Terminal Connectors and disengaging the tabs on the TOP and BOTTOM of the enclosure with a screwdriver. Once disengaged, the PC Board can be slid out for configuration.

DIP Switch and Slide Switch Description:

S1: BFD High Pass Filter: 1kHz or 5kHz

S2: Overall Vibration Acceleration or Velocity Mode

S3: Overall Vibration Peak or RMS Mode

S4: Overall: 5g, 0.5ips

S5: Overall: 10g, 1ips

S6: Overall: 20g, 2ips

Warning: Do not make any adjustments to the internal potentiometers. These potentiometers are used for factory calibration and adjusting them will require return of the 682C05 to the factory for recalibration.

Internal Switch Settings

The internal switches of the Model 682C05 must be configured for the Full Scale Output of the ICP® Sensor connected to it. This is accomplished by removing the front cover and sliding the PC Board out of the Signal Conditioner. Once removed, the switches should be configured per one of the conditions in the following table.

Bearing Fault Detector: Set **S1** for 1kHz or 5kHz (based on running speed). Range is fixed at 50g's Peak.

Overall Vibration:

Range Setting	S2	S3	S4	S5	S6
5g RMS	UP	UP	ON	OFF	OFF
5g Peak	UP	DOWN	ON	OFF	OFF
10g RMS	UP	UP	OFF	ON	OFF
10g Peak	UP	DOWN	OFF	ON	OFF
20g RMS	UP	UP	OFF	OFF	ON
20g Peak	UP	DOWN	OFF	OFF	ON
0.5 in/sec RMS	DOWN	UP	ON	OFF	OFF
0.5 in/sec Peak	DOWN	DOWN	ON	OFF	OFF
1.0 in/sec RMS	DOWN	UP	OFF	ON	OFF
1.0 in/sec Peak	DOWN	DOWN	OFF	ON	OFF
2.0 in/sec RMS	DOWN	UP	OFF	OFF	ON
2.0 in/sec Peak	DOWN	DOWN	OFF	OFF	ON

Note: Factory Default Setting is 1.0in/sec Peak

Recommended Alert and Alarm Settings for Fault Detector:

Although each machine will have alert and alarm settings at various levels based on its high frequency spectra, data has been provided as a baseline to approximate what these limits should be. Note that this data is a recommendation and levels should be adjusted according to measurements taken from a detailed vibration analysis and/or machine history. Please contact IMI Sensors for additional information and support regarding Alert and Alarm settings.

Recommended Fault Detector Alert and Alarm Limits

Speed Range (RPM)	Alert Limit (Peak g-level)	Alarm Limit (Peak g-level)
Less than 5	0.100	0.180
5 - 10	0.150	0.270
10 - 20	0.200	0.360
20 - 60	0.400	0.720
60 - 150	1.000	1.800
150 - 400	2.000	3.600
400 - 700	4.000	7.200
700 - 4000	5.000	9.000
4000 - 10000	7.000	12.600

Warning 1 – ESD sensitivity

The power supply/signal conditioner should not be opened by anyone other than qualified service personnel. This product is intended for use by qualified personnel who recognize shock hazards and are familiar with the safety precautions required to avoid injury.

Warning 2 – ESD sensitivity

This equipment is designed with user safety in mind; however, the protection provided by the equipment may be impaired if the equipment is used in a manner not specified by PCB Piezotronics, Inc.

Caution 1 – ESD sensitivity

Cables can kill your equipment. High voltage electrostatic discharge (ESD) can damage electrical devices. Similar to a capacitor, a cable can hold a charge caused by triboelectric transfer, such as that which occurs in the following:

- *Laying on and moving across a rug,*
- *Any movement through air,*
- *The action of rolling out a cable, and/or*
- *Contact with a non-grounded person.*

The PCB solution for product safety:

- *Connect the cables only with the AC power off.*
- *Temporarily "short" the end of the cable before attaching it to any signal input or output.*

Caution 2 – ESD sensitivity

ESD considerations should be made prior to performing any internal adjustments on the equipment. Any piece of electronic equipment is vulnerable to ESD when opened for adjustments. Internal adjustments should

therefore be done ONLY at an ESD-safe work area. Many products have ESD protection, but the level of protection may be exceeded by extremely high voltage.

Warranty

IMI instrumentation is warranted against defective material and workmanship for 1 year unless otherwise expressly specified. Damage to instruments caused by incorrect power or misapplication, is not covered by warranty. *If there are any questions regarding power, intended application, or general usage, please consult with your local sales contact or distributor.* Batteries and other expendable hardware items are not covered by warranty.

Service

Because of the sophisticated nature of IMI instrumentation, field repair is typically **NOT** recommended and may void any warranty. If factory service is required, return the instrumentation according to the "Return Procedure" stated below. *A repair and/or replacement quotation will be provided prior to servicing at no charge.* Before returning the unit, please consult a factory IMI applications engineer concerning the situation as certain problems can often be corrected with simple on-site procedures.

Return procedure

To expedite returned instrumentation, contact a factory IMI applications engineer for a RETURN MATERIAL AUTHORIZATION (RMA) NUMBER. Please have information available such as model and serial number. Also, to insure efficient service, *provide a written description of the symptoms and problems with the equipment to a local sales representative or distributor, or contact IMI if none are located in your area.*

Customers outside the U.S. should consult their local IMI distributor for information on returning equipment. For exceptions, please contact the International Sales department at IMI to request shipping instructions and an RMA. For assistance, please call (716) 684-0003, or fax us at (716) 684-3823. You may also receive assistance via e-mail at **imi@pcb.com** or visit our web site at **www.pcb.com**.

Customer Service

IMI, a division of PCB Piezotronics, guarantees **Total Customer Satisfaction**. If, at any time, for any reason, you are not completely satisfied with any IMI product, IMI will repair, replace, or exchange it at no charge. You may also choose, within the warranty period, to have your purchase price refunded.

IMI offers to all customers, at no charge, 24-hour phone support. This service makes product or application support available to our customers, day or night, seven days a week. When unforeseen problems or emergency situations arise, call the **IMI Hot Line at (716) 684-0003**, and an application specialist will assist you.

3425 Walden Avenue, Depew, NY 14043-2495
Phone: (716) 684-0003 • USA Fax: (716) 684-3823 • INTL Fax: (716) 684-4703

ICP® is a registered trademark of PCB Group, Incorporated,
which uniquely identifies PCB sensors that incorporate built-in microelectronics.

Model Number	BEARING FAULT DETECTOR	Revision: NR
682C05		ECN #: 46949

Performance	**ENGLISH**	**SI**	
Input Signal	100 mV/g	10.2 mV/(m/s²)	
Frequency Response(± 3 dB)(Overall Vibration)	10 to 1k Hz	10 to 1k Hz	
Frequency Response(± 3 dB)(Fault)	1k or 5k to 100 kHz	1k or 5k to 100 kHz	[1]
Measurement Range(Fault Detector)	50 g	50 g	
Measurement Range(Vibration)	5/10/20 g	49.0/98.1/196.1 m/s²	[2]
Measurement Range(Velocity)	0.5/1/2 in/sec	12.7/25.4/50.8 mm/sec	[3]
Output Range	4 to 20 mA	4 to 20 mA	[1][4]
Sampling Time(± 15 %)	7 sec	7 sec	
Span(± 5 %)	16 mA	16 mA	
Control Interface			
Power LED	Green	Green	
Environmental			
Warm Up	<2 minutes	<2 minutes	
Temperature Range(Operating)	32 to 158 °F	0 to 70 °C	
Temperature Range(Storage)	-40 to 257 °F	-40 to 125 °C	
Electrical			
Supply Voltage	20 to 28 VDC	20 to 28 VDC	
Current Consumption	≤ 150 mA	≤ 150 mA	
Excitation Voltage(± 1 V)	24 VDC	24 VDC	
Constant Current Excitation(± 1 mA)	4 mA	4 mA	
Raw Vibration Output	+/-0.01 % of Input	+/-0.01 % of Input	
Load Resistance	500 Ohm	500 Ohm	
Physical			
Size (Width x Height x Depth)	0.9 in x 3.9 in x 4.5 in	22.5 mm x 99 mm x 114.5 mm	
Weight	<5 oz	<142 gm	
Housing Material	Polyamide	Polyamide	
Screw Terminal Wire Size	24-14 AWG	0.2 - 2.5 mm²	
Electrical Connector(input/output)	Removable Screw Terminals	Removable Screw Terminals	
Electrical Connector(Output, Vibration)	BNC Jack	BNC Jack	
Din Rail Mount	1.38 in	35 mm	

CE[5]

All specifications are at room temperature unless otherwise specified.
In the interest of constant product improvement, we reserve the right to change specifications without notice.

ICP® is a registered trademark of PCB Group, Inc.

OPTIONAL VERSIONS

Optional versions have identical specifications and accessories as listed for the standard model except where noted below. More than one option may be used.

NOTES:

[1] Internal Dip switch selectable
[2] Acceleration mode.
[3] Velocity mode.
[4] Output current voltage will fluctuate at frequencies below 5 Hz.
[5] See PCB Declaration of Conformance PS152 for details.

Entered: LK	Engineer: gs	Sales: MC	Approved: BAM	Spec Number:
Date: 6/30/2017	Date: 6/30/2017	Date: 6/30/2017	Date: 6/30/2017	**67444**

IMI SENSORS
A PCB PIEZOTRONICS DIV.
3425 Walden Avenue, Depew, NY 14043

Phone: 800-959-4464
Fax: 716-684-3823
E-Mail: imi@pcb.com

27894

APPLICATION		
NEXT ASS'Y	USED ON	VAR

REVISIONS				
REV	DESCRIPTION	ECN	DATE	APP'D
NR	RELEASED TO DRAFTING		10/28/04	DM10/04
A	REVISED DRAWING TITLE	23034	11/2/05	EB 11/05

PCB Piezotronics Inc. claims proprietary rights in the information disclosed hereon. Neither it nor any reproduction thereof will be disclosed to others without written consent of PCB Piezotronics Inc.

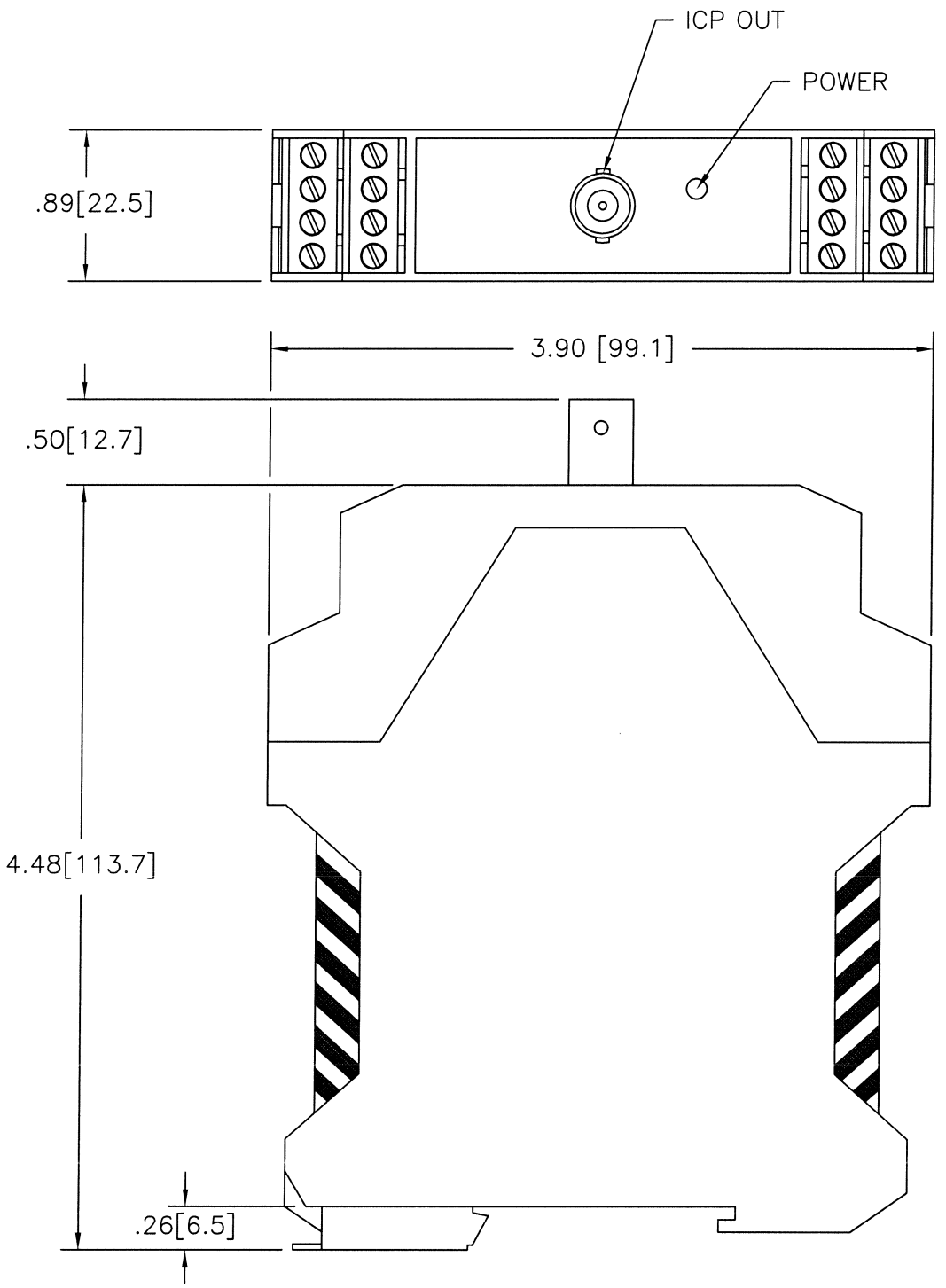

UNLESS SPECIFIED TOLERANCES	
DIMENSIONS IN INCHES	DIMENSIONS IN MILLIMETERS [IN BRACKETS]
DECIMALS XX ±.03 XXX ±.010	DECIMALS X ±0.8 XX ±0.25
ANGLES ±2 DEGREES	ANGLES ±2 DEGREES
FILLETS AND RADII .003 – .005	FILLETS AND RADII [0.07 – 0.13]
DD011 REV. C 01/21/03	

DRAWN	LCE	11/3/05	MFG	[illegible]	11/4/05
CHK'D	ECB	11/3/05	ENGR	[illegible]	11/3/05
APP'D	N.A	11/9/05	SALES	[illegible]	11/3/05

TITLE
OUTLINE DRAWING
BEARING
FAULT DETECTOR

PCB PIEZOTRONICS INC.
3425 WALDEN AVE. DEPEW, NY 14043
(716) 684–0001 EMAIL: SALES@PCB.COM

CODE IDENT. NO.	DWG. NO.
52681	27894
SCALE: FULL	SHEET 1 OF 1

Repair and Maintenance

PCB guarantees Total Customer Satisfaction through its "Lifetime Warranty Plus" on all Platinum Stock Products sold by PCB and through its limited warranties on all other PCB Stock, Standard and Special products. Due to the sophisticated nature of our sensors and associated instrumentation, **field servicing and repair is not recommended and, if attempted, will void the factory warranty**.

Beyond routine calibration and battery replacements where applicable, our products require no user maintenance. Clean electrical connectors, housings, and mounting surfaces with solutions and techniques that will not harm the material of construction. Observe caution when using liquids near devices that are not hermetically sealed. Such devices should only be wiped with a dampened cloth—never saturated or submerged.

In the event that equipment becomes damaged or ceases to operate, our Application Engineers are here to support your troubleshooting efforts 24 hours a day, 7 days a week. Call or email with model and serial number as well as a brief description of the problem.

Calibration

Routine calibration of sensors and associated instrumentation is necessary to maintain measurement accuracy. We recommend calibrating on an annual basis, after exposure to any extreme environmental influence, or prior to any critical test.

PCB Piezotronics is an ISO-9001 certified company whose calibration services are accredited by A2LA to ISO/IEC 17025, with full traceability to SI through N.I.S.T. In addition to our standard calibration services, we also offer specialized tests, including: sensitivity at elevated or cryogenic temperatures, phase response, extended high or low frequency response, extended range, leak testing, hydrostatic pressure testing, and others. For more information, contact your local PCB Piezotronics distributor, sales representative, or factory customer service representative.

Returning Equipment

If factory repair is required, our representatives will provide you with a Return Material Authorization (RMA) number, which we use to reference any information you have already provided and expedite the repair process. This number should be clearly marked on the outside of all returned package(s) and on any packing list(s) accompanying the shipment.

Contact Information

PCB Piezotronics, Inc.
3425 Walden Ave.
Depew, NY14043 USA
Toll-free: (800) 828-8840
24-hour SensorLine: (716) 684-0001
General inquiries: info@pcb.com
Repair inquiries: rma@pcb.com

For a complete list of distributors, global offices and sales representatives, visit our website, www.pcb.com.

Safety Considerations

This product is intended for use by qualified personnel who recognize shock hazards and are familiar with the precautions required to avoid injury. While our equipment is designed with user safety in mind, the protection provided by the equipment may be impaired if equipment is used in a manner not specified by this manual.

Discontinue use and contact our 24-Hour Sensorline if:

- Assistance is needed to safely operate equipment
- Damage is visible or suspected
- Equipment fails or malfunctions

For complete equipment ratings, refer to the enclosed specification sheet for your product.

Definition of Terms and Symbols

The following symbols may be used in this manual:

DANGER
Indicates an immediate hazardous situation, which, if not avoided, may result in death or serious injury.

CAUTION
Refers to hazards that could damage the instrument.

NOTE
Indicates tips, recommendations and important information. The notes simplify processes and contain additional information on particular operating steps.

The following symbols may be found on the equipment described in this manual:

This symbol on the unit indicates that high voltage may be present. Use standard safety precautions to avoid personal contact with this voltage.

This symbol on the unit indicates that the user should refer to the operating instructions located in the manual.

This symbol indicates safety, earth ground.

PCB- PCB工业监测和测量设备 - 中国RoHS 公布表

PCB Industrial Monitoring and Measuring Equipment - China RoHS Disclosure Table

部件名称 Part Name	有毒和危险品 Toxic and Hazardous Substances or Elements									
Part	铅 (Pb)	水银 (Hg)	镉 (Cd)	六价 铬 (Cr(VI)	多溴化 苯 (PBB)	多溴化二苯 醚 (PBDE)	邻苯二甲酸 二(2-乙基) 己酯 (DEHP)	邻苯二甲丁 基苄酯 (BBP)	邻苯二甲酸 二酸正丁酯 (DBP)	邻苯二甲酸 二异丁酯 (DIBP)
电气外壳 (Electrical Enclosures)	X	O	O	O	O	O	O	O	O	O
紧固件和弹簧 (Fasteners)	X	O	O	O	O	O	O	O	O	O
电缆组件 (Cable Assembly)	X	O	O	O	O	O	O	O	O	O
印刷电路板组装 (PCBAs)	X	O	O	O	O	O	O	O	O	O
机械零件(Mechanical Parts)	O	O	O	O	O	O	O	O	O	O
塑料和橡胶零件 (Plastic & Rubber Parts)	O	O	O	O	O	O	O	O	O	O
金属零件 (Metal Parts)	X	O	O	O	O	O	O	O	O	O

本表格依据 SJ/T 11364 的规定编制

O =表示该有害物质在该部件所有均质材料中的含量均在 GB/T 26572 规定的限量要求以下 (indicates that the content of the toxic and hazardous substance in all the Homogeneous Materials of the part is below the concentration limit requirement as described in GB/T 26572).

X =表示该有害物质至少在该部件的某一均质材料中的含量超出 GB/T 26572 规定的限量要求 (indicates that the content of the toxic and hazardous substance in at least one Homogeneous Material of the part exceeds the concentration limit requirement as described in GB/T 26572).