# Technical data sheet

## Cable tray RKS-Magic® 60 FS

## Item number: 6047638

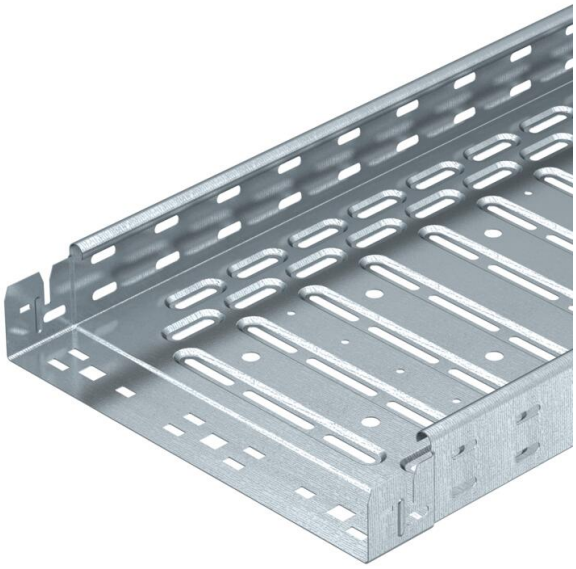

Cable tray with integrated quick fastening system. The usable length of the cable tray is 3,000 mm.

The cable tray has continuous side perforations of 7 x 20 mm for the installation of additional connection and mounting components.

The perforation for direct threaded rod suspension has a diameter of 11 mm. Continuous equipotential bonding is guaranteed without additional components. Magnetic shield insulation without cover 20 dB, with cover 50 dB.
The cable tray is tested for the maintenance of electrical function, tested according to DIN 4102 Part 12 and for mounting above suspended fire protection ceilings (each for tray widths 100 - 400 mm).

The mounting version and parameters correspond to the valid certificates.

You can find additional information in our fire protection systems catalogue.

E30 E60 E90

St Steel

FS Strip galvanised

### Master data

| | |
|---|---|
| Item number | 6047638 |
| Type | RKSM 620 FS |
| Description 1 | Cable tray RKSM |
| Description 2 | Magic, quick connector |
| Manufacturer | OBO |
| Dimension | 60x200x3050 |
| Colour | zinc |
| Material | Steel |
| Surface | Strip galvanised |
| Surface standard | DIN EN 10346 |
| Smallest sales unit | 3 |
| Unit of quantity | Metre |
| Weight | 181.508 kg |
| Weight unit | kg/100 m |
| CO2 Footprint (GWP) Cradle-to-Gate | 4,4813 kg CO2e / 1 Meter |

# Technical data sheet

## Cable tray RKS-Magic® 60 FS

## Item number: 6047638

### Dimensions

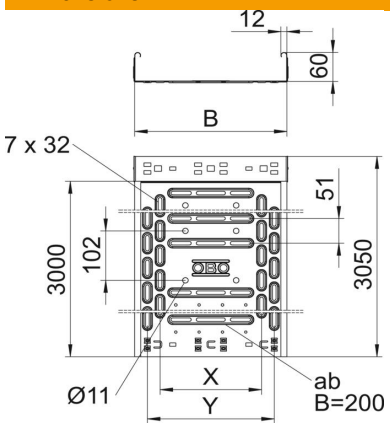


| | |
|---|---|
| Length | 3,050 mm |
| Length | 10 ft |
| Width | 200 mm |
| Width | 8 in |
| Height | 60 mm |
| Height | 2 in |
| Plate thickness | 0.03 in |
| Plate thickness | 0.75 mm |
| Dimension B | 200 mm |
| Dimension x | 100 mm |
| Dimension y | 150 mm |

### Technical data

| | |
|---|---|
| Connector version | Integrated connector |
| Mounting system fastening type | Floor Ceiling Wall |
| Walkable | no |
| Base perforation | 1 |
| Maintain electrical functions | yes |
| With cover | no |
| Mounting perforation in base | yes |
| NATO hole pattern | no |
| Usable cross-section | 118 cm² |
| Usable cross-section | 11800 mm² |
| ROHS-conformant | yes |
| Rustproof steel, pickled | no |
| Side perforation | yes |
| Wide-span version | no |
| Magnetic shield insulation without cover | 20 dB |
| Magnetic shield insulation with cover | 50 dB |
| Load test type according to IEC 61537 | Type II |
| Usable length | 3000 mm |
| Type of connector, cable support system | Click fastening |

# Technical data sheet

## Cable tray RKS-Magic® 60 FS

## Item number: 6047638

### Loads

| | |
|---|---|
| Insertable support spacings, min. | 1 m |
| Insertable support spacings, max. | 2.5 m |
| NEMA load class | 8AA |
| Support spacing 1.0 m | 1.2 kN/m |
| Support spacing 1.5 m | 1 kN/m |
| Support spacing 2.0 m | 0.55 kN/m |
| Support spacing 2.5 m | 0.4 kN/m |

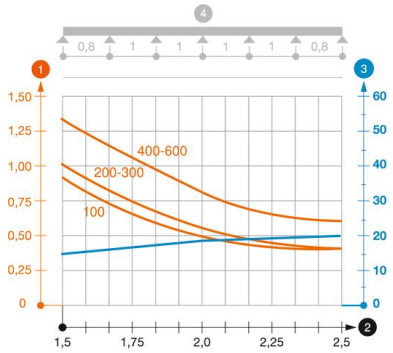


**Load diagram, cable tray, type RKSM 60**

1. Permitted cable tray/ladder load in kN/m without man load
2. Support width in m
3. Rail bend in mm at permitted kN/m
4. Load scheme during testing

— Load curve with cable tray/ladder width in mm

— Strut bend curve according to support width