MOORE INDUSTRIES WORLDWIDE

FS FUNCTIONAL SAFETY SERIES

SLA

SIL 2/3 Capable Multiloop and Multifunction Safety Logic Solver and Alarm

April 2026

Description

Part of the Moore Industries **FS FUNCTIONAL SAFETY SERIES**, the **exida®** certified SIL 2/3 capable SLA is a versatile multiloop and multifunctional Safety Logic Solver and Alarm that acts on hazardous process conditions, warns of unwanted process parameters, performs on/off control and provides emergency shutdown in Safety Instrumented Systems (SIS) and traditional alarm trip applications.

The FDT/DTM programmable 4-wire (line/mains-powered) SLA accepts up to four discrete and six analog inputs from a wide array of devices and sensors (see Figure 1) including:

- **Current and Voltage Signals**
- **Temperature (RTD and T/C) Sensor Inputs**
- **Resistance and Potentiometer Devices**
- **Direct Millivolt Sources**
- **Low Voltage Contacts**

Relay and Discrete Outputs

The SLA has four relay outputs and up to four discrete contact closure outputs that can be driven by any of the programmable 16 internal alarms. Individual or multiple alarms can be assigned to each relay or discrete output. Relay and discrete outputs can also be triggered by any input or internal diagnostic fault. Three optional analog outputs allow retransmission of any input or internally calculated equation or variable.

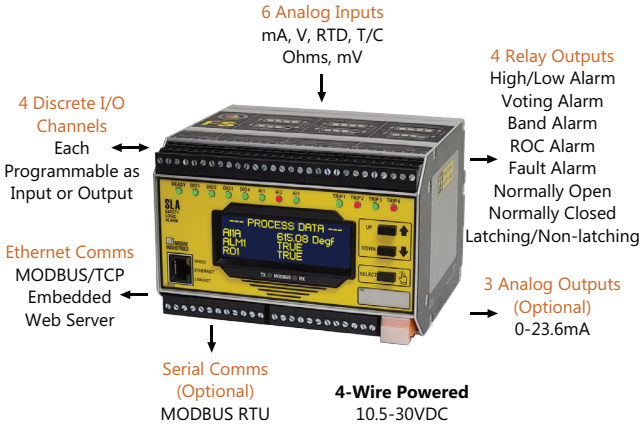

Figure 1. Multiloop Programmable Safety Logic Solver and Alarm

The SLA features a metal, RFI/EMI resistant housing with OLED display that snaps onto standard DIN-style rails

Features

- **exida certified IEC 61508:2010.** For systematic integrity up to SIL 3 and for random integrity up to SIL 2. This means that an SLA is approved for single use in SIS up to SIL 2 and in redundant architectures (1oo2, 2oo3, etc.) up to SIL 3.

- **Dynamic Alarming Capability.** With up to 16 alarms and eight physical alarm outputs, simple and complex alarming strategies can be implemented with easy to use drop-down menus, radio buttons, and check-boxes. Even complex alarm voting architectures like 1oo2, 2oo3, 3oo5 are simple to employ.

- **Secure Programming and Communication.** The SLA includes Configuration Security Jumpers that can be set to prevent unauthorized reprogramming and ensure read-only communication through the Ethernet and MODBUS ports.

- **Intuitive Equation/Expression Editor for Math and Logic Functions.** No PLC programmers required. With the SLA's powerful but easy to use equation/expression editor you can create monitoring, alarming and control schemes that involve simple to complex equations using timers, running min/max functions, prebuilt analog and discrete logic functions and more.

- **Digital Communications.** The SLA supports MODBUS/TCP and MODBUS RTU industrial protocols. An embedded read-only web server allows all inputs, outputs, internal variables and various other parameters to be read with a simple web browser.

© 2026 Moore Industries-International, Inc.

Certified to IEC 61508

The SLA has been certified, by exida to IEC 61508 for systematic integrity up to SIL 3 and for single use in SIS up to SIL 2. It has been designed and developed in strict compliance with IEC 61508 standards to provide the highest level of system integrity and reliability.

Advanced internal diagnostics provide notification and protection against spurious failures during safety operation. Approval by exida means that you can have confidence when selecting the SLA for your safety needs. You don't have to worry about documenting and tracking Proven-In-Use data as often required with non-IEC 61508 approved devices.

Dynamic Alarming Capability

With up to 16 internal alarms, simple and complex alarming strategies can be implemented with easy to use drop-down menus, radio buttons, and check-boxes. Alarm input sources can be single process variable inputs or sources derived by an internal equation or math function using the SLA's equation/expression editor. Standard alarm types include Trip, Rate of Change, Band and Stuck Input type alarms (see Figure 3). Alarms can also be configured as Discrete type alarms that allow various faults and warnings to be assigned as the alarm input source.

High Availability/Integrity

Each of the SLA's 16 alarms can be configured for High Availability or High Integrity. When the High Availability option is chosen the alarm will activate only when its input source breaches designated setpoints and related alarm settings. Issues that would otherwise cause spurious trips like input wiring faults and input out of range limit errors would be ignored. Alternatively, if the High Integrity option is chosen the alarm would activate when either alarm setpoints were reached or there was a fault associated with the alarm's input source.

FDT/DTM Programmable

No custom or licensed software is required with the SLA as it is programmed with any FDT compliant host. Along with configuration and setup the SLA's DTM also includes full monitoring and simulation capabilities that allow you to test your alarming and safety functions before installation or commissioning (see Figure 2).

FREE PACTware Configuration Software with Versatile Programming Options

Download PACTware software for FREE from our website which allows you to set up all SLA parameters utilizing our DTM with easy to use pull-down menus.

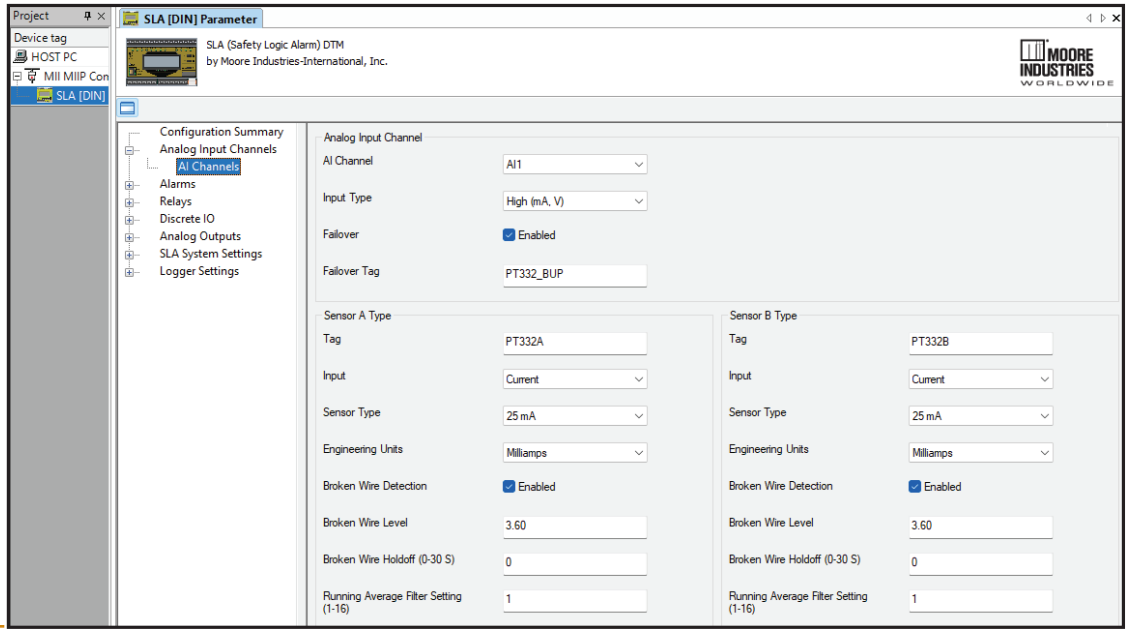

Figure 2.

Advanced Alarm Settings

Each alarm has advanced settings including deadband, delay, latching/non-latching and suppression. In addition, alarms can have an Additional Start Up Delay time applied that suppresses the alarm action giving your process time to reach a nominal operational state (See Figure 3).

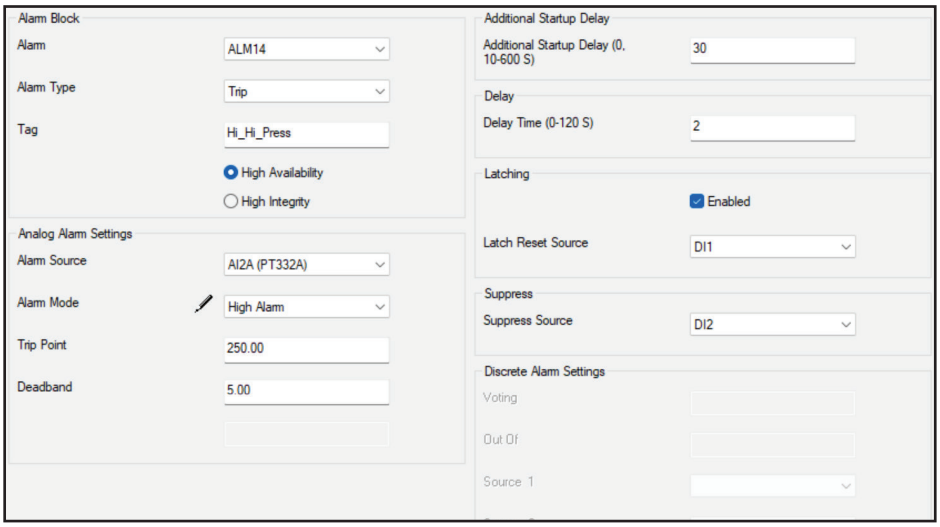

Figure 3.

Alarm Voting Architectures

With the SLA, wiring traditional alarm relays in series for voting architectures is no longer required. Each of the four relays on the SLA can be driven by just one of the internal 16 alarms or be configured to activate on voting schemes like 1oo2, 2oo2, 2oo3 or even more complex architectures such as 4oo8 (see Figure 4).

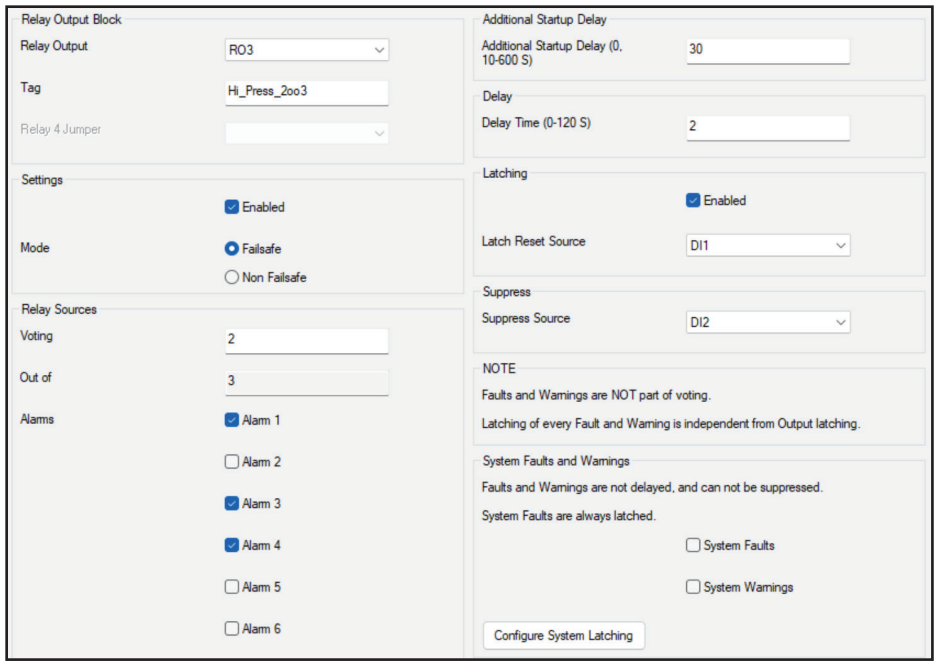

Figure 4.

Three Dual-Channel Analog Inputs

With three isolated dual-channel universal analog inputs, you have the ability to set alarms on up to six separate sensors or inputs. With the SLA's built-in equation/expression editor, custom or prebuilt math and logic functions allow you to average, select the highest or lowest of any combination of these inputs, further enhancing your monitoring, alarming or control needs. The easy to use DTM configuration pages let you set input type, failover/backup, engineering units (EGU), broken wire detection, upper and lower ranges, scaling etc. Each of the three analog input channels must be configured as the same type: Temperature Inputs (TPRG) or Current/Volt Inputs (HLPRG). Current input types have the ability to power two-wire, loop powered transmitters so a separate external power supply is not required.

Discrete I/O

The SLA includes four discrete I/O channels that can be individually configured as input or output. Discrete inputs can be configured to act as manual resets for latching alarms, suppression for alarms or Boolean inputs for use in internal equations or logic functions. When configured as discrete outputs, these channels can be used as additional alarm outputs when four relay outputs are insufficient.

Analog Outputs

As an option, three analog outputs can be added to the SLA for retransmission of any connected analog input or internal analog variables created in the SLA's equation/expression editor. Outputs can be wired as source/active or sink/passive which help avoid bucking power supply situations when the host system only has active input cards available.

HART Pass-through Capable

It is often important that Basic Process Control Systems (BPCS) or asset managers monitor the status of SIS sensors. The SLA allows the HART communication signal from connected field devices to pass through to the SLA's analog outputs allowing HART enabled hosts or asset managers to have full communication, monitoring or programming capabilities (see Figure 5).

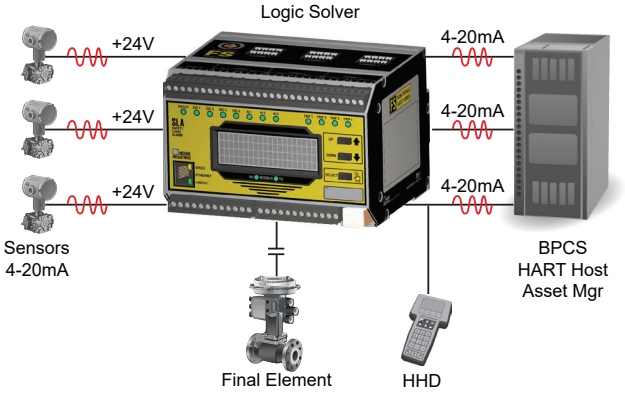

Figure 5. *The SLA Analog Outputs pass HART data when corresponding Analog Input channels are connected to HART devices*

Advanced Math and Logic

The SLA has a powerful and flexible but easy to use equation/expression editor feature. Here internal variables consisting of either analog equations or discrete expressions can be created to further enhance your alarming, monitoring or control needs. Equations and expressions are built using spreadsheet-like formulas and prebuilt functions. An equation/expression editor quick reference is available on screen to help ensure quick and easy creation of internal variables (see Figure 6). Once built, these variables can be used as alarm input sources, analog output sources or even alarm suppression and reset triggers. Additional advanced functions like Timers, Running Min/Max Registers and Custom Curves are also available.

Figure 6.

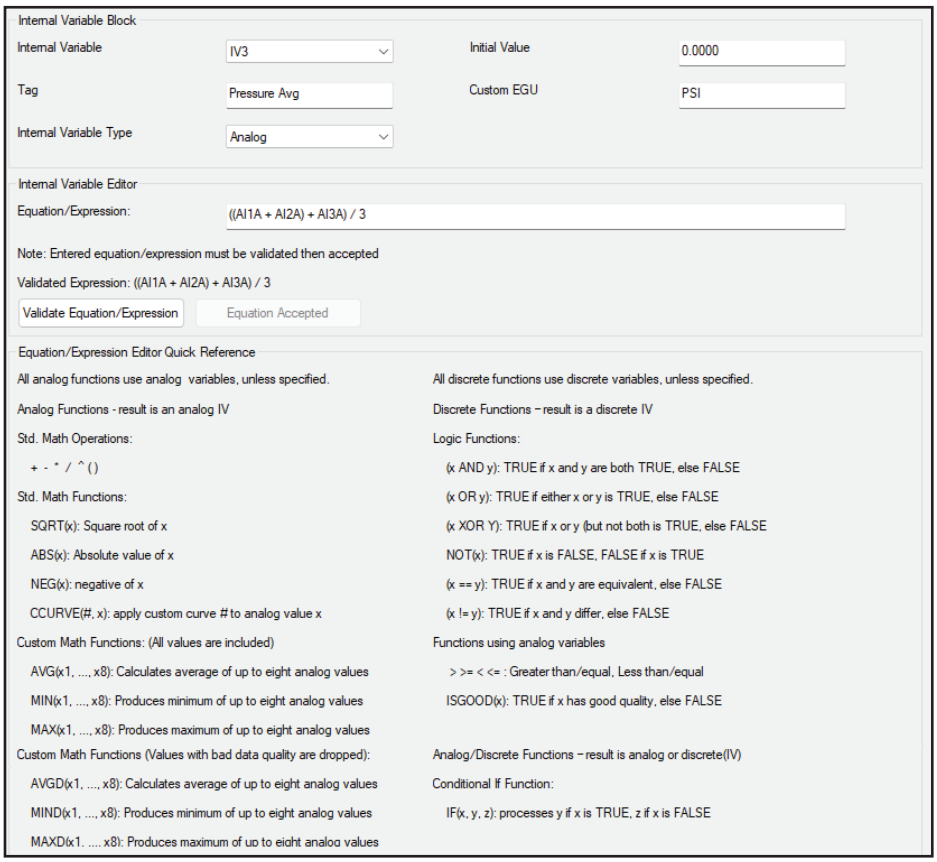

Secure Programming and Communication

In line with industry security standards such as IEC 62443, the SLA includes Configuration Security Jumpers that once set, provide a physical air-gap that prevents any unauthorized external digital communication, reconfiguration, or programming. Additionally, for added security the SLA's web server, MODBUS/TCP and MODBUS RTU communication capabilities are all read-only, ensuring no write-access to the SLA.

Digital Communications

The SLA supports MODBUS/TCP and MODBUS RTU industrial protocols. For added security, read-only communication is permitted over these protocols. The SLA does not support write commands from MODBUS/TCP or MODBUS RTU hosts.

Embedded Web Server

The built-in web server in the SLA provides quick and easy read-only viewing of inputs, alarms, outputs, internal variables, faults, warnings and more via any standard web browser. Prebuilt web pages include simple to navigate menus and tables that neatly lay out all of the SLA's parameters (Figure 7).

SLA: Safety Logic Alarm

Home - System Information

Unit	
Property	**Value**
System Date	Thursday Feb 16, 2023
System Time	07:17:45.2
Serial Number	3011
Model Number	SLA / 6PRG / 4PRG / 9-30DC / -3AO -MB485 [DIN]
Network Name	CN04F
Network Location	North Reactor Grid
Tag	PV014
Descriptor	Pressure_Vess014
Message	High Pressure Load Cells
Powered Up Since	Thu Feb 16, 2023 at 06:27:21
Last Power Down	Wed Feb 15, 2023 at 17:14:19
Programmed Date	Thu Feb 16, 2023 at 07:17:40
Calibration Date	Thu Jan 19, 2023 at 21:56:00
Configuration ID	0xAAE840CE

Security	
Property	**Status**
Safety Config Jumper at Boot	Read/Write
Network Config Jumper at Boot	Read Only
RO4 Jumper at Boot	Fault Relay
AI 1 Input Level Switches	Low Level (RTD, Res, T/C, mV)
AI 2 Input Level Switches	Low Level (RTD, Res, T/C, mV)
AI 3 Input Level Switches	High Level (mA/V)

Figure 7.

Onboard Event Logging

The on-board event logger offers a wide spectrum of logging functions. Logged events can be viewed on the Event Log webpage or downloaded as a .CSV file which can be used to analyze alarms, inputs/outputs, internal variables, faults, warnings and more. Available data for logging includes:

- Analog Input Errors & Diagnostics
- Discrete I/O Events & Diagnostics
- Alarm Events
- Relay Output Status
- Analog Output Diagnostics
- Internal Variable Diagnostics
- Timer Status
- Running Min/Max Diagnostics
- Configuration, Network, System and Security Events

Online Simulation

The SLA supports online simulation utilizing the DTM and any FDT host. Simulation allows users to enter digitally simulated input values to evaluate how alarms, relays, analog outputs and even internal variables behave and react. This can be very useful for safety practitioners to ensure the Safety Instrumented Function (SIF) that the SLA is designed for, performs correctly. A programmable simulation timeout feature prevents the SLA from being left in simulation mode.

Designed for Remote Locations

The SLA requires 10.5-30VDC to operate, making it suitable for use in remote locations that employ solar panel and battery backup systems. Many such remote locations will also require the SLA's wide ambient operating temperature range of -40 to 85C.

Display

The bright front-panel OLED display provides four rows of alphanumeric readout data with on-panel push-buttons for menu selection and scrolling. The SLA cannot be configured from the display but display parameters can be set via the DTM and FDT host.

Figure 8. SLA features a bright 4x20 OLED display

Specifications

PERFORMANCE

ANALOG INPUT
Three dual input isolated channels with failover and switch selectable for HLPRG (mA/V) or TPRG (RTD, T/C, Ohm, mV, Potentiometer) type inputs.
Range and Accuracy: See Table 1
Reference Junction Compensation Accuracy (T/C inputs only): ±0.45°C
Long Term Stability: Refer to Table 2

Note: The SLA provides three dual-input channels (AI1A/AI1B, AI2A/AI2B, AI3A/AI3B).The A and B inputs on each channel are NOT isolated from each other. They share a common ground/reference. Only the three channels themselves are isolated from one another.

DISCRETE I/O
Four non-isolated channels configurable as failsafe/non-failsafe input or output
Input: Contact closure 26Vdc (Voc), 5mA (Isc). Debounce time 5-100mS.
Input threshold: <8Vdc Low; >15Vdc High.
Output: 30Vdc, 120mA max sink. Alarm voting and selectable system and input faults. Configurable latching, suppression, delay and startup delay (0-120seconds).

RELAYS
Four Process Relays with fourth relay jumper selectable as Fault Relay. Failsafe/non-failsafe with alarm voting and selectable system and input faults. Configurable latching, suppression, delay and startup delay (0-120 seconds). Single- pole/double-throw SPDT, 1 form C, rated 3A@250Vac or 3A@30Vdc, 50/60Hz, non-inductive.

ANALOG OUTPUT (option)
Three optional analog outputs with hardwired HART pass through from sensor A of each AI to its corresponding AO channel
Range: 0-21.6mA, Minimum Span 4mA
Accuracy: ±3 uA
Output Ripple (up to 120Hz): 10mV peak-to-peak measured across a 250 Ohm load resistor for current output
Output Failure Limits:
Compliant with Namur 43

Output	Failure Limits
0-20mA	0, 23.6mA
4-20mA	3.6, 23.6mA
X-20mA (0<X<4)	(90% of X), 23.6mA

Load Capability: Source mode 600 Ohms; Sink Mode (External power), 42Vdc Max.
Max Load Effect: ±0.01% of span from 0 to maximum load resistance on current output
Step Response of AO: 100mS max from 10%-90% output

SYSTEM ACCURACY
The overall accuracy of the unit is the combined input and output accuracies. It includes the combined effects of linearity, hysteresis, repeatability and adjustment resolution. It does not include ambient temperature effect. For T/C input, add the RJC error.

PERFORMANCE CONT. / FUNCTIONALITY

Ambient Temperature Effect: See Table 3
Power Supply Effect: ±0.002% of span per 1% line voltage change
Noise Rejection: See Table 4

OUTPUT TRIP RESPONSE TIME (Typical):
TPRG Input - One sensor per channel: 750mS; Two sensors per channel: 1.3 seconds; HLPRG Input - One sensor per channel: 450 mS; Two sensors per channel: 700mS; for analog outputs add AO step response.

FUNCTIONALITY

SYSTEM
System startup delay 0-60 minutes System simulation with configurable timeout

ALARMS
Up to sixteen alarms programmable as discrete or analog (Trip, Band, Rate of Change, Stuck Input). Configurable latching, suppression, delay and startup delay (0-120 seconds). Analog alarms: High availability/integrity settings and configurable dead band. Discrete alarms: voting on faults, warnings, and discrete variables.

INTERNAL VARIABLES/EQUATIONS and FUNCTIONS
Up to 16 Internal Variables using analog and discrete equations and functions

ADDITIONAL ADVANCED FUNCTIONS
Eight countdown Timers (0-3600 Seconds); Eight Running Min/Max with high integrity/availability; Four Custom Curves (Linearization tables with 2-128 x,y entries).

DIAGNOSTICS
Comprehensive input and system diagnostics with configurable latching of input and system faults and warnings

SECURITY
User Configuration Jumper: read-only or read/write (In read-only mode, this jumper physically disconnects serial writes to the safety section); **Network Configuration Jumper:** read-only or read/write; **Web server:** Enabled/Disabled; **MODBUS/TCP connection limit:** 0-4.

DISPLAY
4x20 OLED alphanumeric readout with push-buttons for menu selection and scrolling. Bright display with 160 degree viewing angle.
LEDs: System (Green/Orange/Red); I/O (Green/Red): DIO 1-4, AI1-3, RO1-4; Ethernet: LINK/ACT (Green), Speed (Yellow); Modbus RTU (Green): TX, RX

EVENT LOGGER
Internal event logger stores up to ~2,000 time/date stamped FIFO records (100msec resolution) in non-volatile RAM that can be exported as .CSV file format

COMMUNICATIONS / ELECTRICAL

ETHERNET COMMUNICATIONS
10/100Base-T supports speeds up to 100Mb/second Standard RJ-45 Connection, Auto negotiation, Auto MDIX, DHCP or fixed IP address, Supported Protocol Types: MIIP (DTM), HTTP, MODBUS/TCP.

PROTOCOL DETAILS

MIIP/DTM
Used with DTM for FDT/DTM interface for configuration and simulation

HTTP
Read-only web pages containing configuration, status and process data.

MODBUS/TCP
User-selectable Standard LSW (Least Significant Word) or Swapped MSW (Most Significant Word) 32 bit floats and 16 bit signed integers (0-3 decimal places)

MODBUS RTU (Option)
Configurable RS-485 port
Baud Rates: 1200, 2400, 4800, 9600, 19.2k, 38.4k, and 57.6k; **Parity:** Even, Odd or No Parity (1 stop bit, fixed; default is No Parity); **Device Address:** 1-255 (Default is 1); **Character Timeout:** Default, 5, 10, 25, 50, 100, 200, and 255 character times; **Response Delay:** Default, 1.5, 5, 10, 25, 50, 100, 200, and 255 character times

ELECTRICAL

Isolation: 500Vrms between case, input, output, and power
Power Supply: 10.5-30VDC
Power Consumption: 11W (Typ), 13W (Max)
Input Over-Range Protection:
Temperature, Ohms and mV: +/-5VDC maximum; **Current:** ±50mA maximum; **Voltage:** ±30Vdc maximum
Input Impedance: T/C and mV: 40Mohms nom; Current, 20 Ohms; Voltage, 1Mohm
Excitation Current: RTD and Ohms, 250 microamps, ±10%
TX Power Supply: 24Vdc, ±10% @ 24mA per Analog Input (Input A only)

AMBIENT CONDITIONS
Operating and Storage Range: -40°C to +85°C (-40°F to +185°F)
Relative Humidity: 5-95%, non-condensing
RFI/EMI Protection: 20V/m@80-1000MHz, 1kHz AM, when tested to IEC61326
WEIGHT: 1.3kg (3lb)

Table 1. **Accuracy**

Input	Type	α	Ohms	Conformance Range	Minimum Span	Input Accuracy/ Repeatability*	Maximum Range
RTD 2-Wire, 3-Wire, 4-Wire	Platinum	0.003850	100	-200 to 850°C (-328 to 1562°F)	10°C (18°F)	±0.1°C (±0.18°F)	-240 to 960°C (-400 to 1760°F)
			200				
			300				
			400				
			500				
			1000				
		0.003902	100	-100 to 650°C (-148 to 1202°F)			-150 to 720°C (-238 to 1328°F)
			200				
			400				
			500				
			1000				
		0.003916	100	-200 to 510°C (-328 to 950°F)			-240 to 580°C (-400 to 1076°F)
	Nickel	0.00672	120	-80 to 320°C (-112 to 608°F)			-100 to 360°C (-148 to 680°F)
	Copper	0.00427	9.035	-50 to 250°C (-58 to 482°F)		±1.0°C (±1.8°F)	-65 to 280°C (-85 to 536°F)
Ohms	Direct Resistance	n/a	0-4000	0-4000 ohms	10 ohms	±0.4 ohms	0-4095 ohms
	Potentiometer		100-4000	0-100%	10%	±0.1%	0-100%
T/C	J	n/a	n/a	-180 to 760°C (-292 to 1400°F)	35°C (63°F)	±0.25°C (±0.45°F)	-210 to 760°C (-346 to 1400°F)
	K	n/a	n/a	-150 to 1370°C (-238 to 2498°F)	40°C (72°F)	±0.3°C (±0.54°F)	-270 to 1372°C (-454 to 2501°F)
	E	n/a	n/a	-170 to 1000°C (-274 to 1832°F)	35°C (63°F)	±0.2°C (±0.36°F)	-270 to 1000°C (-454 to 1832°F)
	T	n/a	n/a	-170 to 400°C (-274 to 752°F)	35°C (63°F)	±0.25°C (±0.45°F)	-270 to 400°C (-454 to 752°F)
	R	n/a	n/a	0 to 1760°C (32 to 3200°F)	50°C (90°F)	±0.55°C (±0.99°F)	-50 to 1768°C (-58 to 3214°F)
	S	n/a	n/a	0 to 1760°C (32 to 3200°F)	50°C (90°F)	±0.55°C (±0.99°F)	-50 to 1768°C (-58 to 3214°F)
	B	n/a	n/a	400 to 1820°C (752 to 3308°F)	75°C (135°F)	±0.75°C (±1.35°F)	0 to 1820°C (32 to 3308°F)
	N	n/a	n/a	-130 to 1300°C (-202 to 2372°F)	45°C (81°F)	±0.4°C (±0.72°F)	-270 to 1300°C (-454 to 2372°F)
	C	n/a	n/a	0 to 2300°C (32 to 4172°F)	100°C (180°F)	±0.8°C (±1.44°F)	0 to 2315°C (32 to 4200°F)
mV	DC	n/a	n/a	n/a	4mV	±70 microvolts	-50 to 1000mV
mA	Current	n/a	n/a	0-25mA	4mA	±2microamps	0-25mA
V	Voltage	n/a	n/a	0-11V	1V	±1mV	11V

* Ambient Temperature Reference Conditions for Specifications: 25°C

Table 2. **Long-Term Stability**

Stability (% of maximum span)	Input to Analog Output (Years)			Input to Relay/DO (Years)		
	1 yr	3 yrs	5 yrs	1 yr	3 yrs	5 yrs
T/C	.08	.14	.18	.008	.014	.019
RTD	.09	.16	.21	.047	.081	.104
mA	0.081	0.14	0.18	0.047	0.081	0.105
V	0.093	0.16	0.21	0.066	0.114	0.147

Table 3. **Ambient Temperature Effect**

	Accuracy per 1°C (1.8°F) Change in Ambient
Input	
RTD	0.003°C +0.0015% of reading
Type B Thermocouple	0.003°C +0.0015% of reading
Thermocouples (All types except B)	0.0003°C +0.0015% of reading
Millivolt	0.0005 mV +0.0015% of reading
Ohm	0.002Ω +0.0015% of reading
mA	0.01% of 20mA
V	0.01% of 10V
Output	
mA	3uA

Table 4. **Normal Mode Rejection Ratio**

Sensor Type	Max. p-p Voltage Injection for 70dB at 50/60 Hz
T/C: E	120mV
T/C: J, K, N, C	60mV
T/C: T, R, S, B	30mV
Pt RTD: 100 ohms	120mV
Pt RTD: 200 ohms	200mV
Pt RTD: 300, 400, 500, 1000 ohms	400mV
Pt RTD: 1000 ohms	800mV
Ni: 120 ohms	200mV
Cu: 9.03 ohms	30mV
Resistance 4K ohms/mV 1000mV	800mV
mA	25mA
V	1V

Ordering Information

Unit	Input	Output	Power	Options	Housing
SLA SIL 2/3 Capable Programmable Safety Logic Solver and Alarm	**6PRG*** Programs to accept: Current: Any range between 0-25mA including: 0-20mA, 4-20mA, 20-4mA, etc. Voltage: Any range between 0-10Vdc including: 0-5Vdc, 1-5Vdc, 0-10Vdc RTD: 2-, 3- and 4-wire; platinum, copper, and nickel Thermocouple: J, K, E, T, R, S, N, C, B Ohms: 0-4000 ohms (Potentiometer, 4000 ohms max.) Millivolts: –50 to +1000mV ***Three dual input channels where both inputs on each channel have to be same type, i.e. TPRG - Temperature Sensor type or HLPRG - Current/Voltage type**	**4PRG** Four relays are single-pole/double-throw; SPDT, 1 form C, rated 3A@250Vac or 3A@30Vdc, 50/60Hz, non-inductive By default fourth relay is configured as a fault relay but can be reconfigured for process relay All models include four Discrete Channels, each Programmable as Input or Output	**10-30DC**	**-3AO** Three analog outputs (isolated and linearized) scalable for any range between 0-21.6mA into 600 ohms (Current outputs are user-wired for internally sourced or externally powered, sink) **-MB485** MODBUS RTU (RS-485) serial data port	**DIN** DIN-style housing mounts on 35mm (EN50022) Top Hat DIN-rails **FLB** Flange bracket provides a secure mount for high vibration applications

When ordering, specify: Unit / Input / Output / Power / Options [Housing]
Model number example: SLA / 6PRG / 4PRG / 10-30DC / -3AO [DIN]

Accessories

Part Number 700-702-43	**FMEDA Report** consistent with IEC 61508-2:2010 providing the information necessary to design a Safety Instrumented System (One copy provided free with each order upon request)

To Request a FMEDA (Failure Modes, Effects and Diagnostics Analysis) Report with a SLA Logic Alarm Order, See "Accessories"

Terminal Designations

The following figures 9 and 10 are the terminal designation information for Discrete I/O, Analog Input Channels, Relay Outputs, Analog Outputs, MODBUS, and Power Terminals.

Figure 9. *Connecting the SLA to Discrete I/O and Analog Inputs (Top Terminals)*

Gray: Not Applicable	DIO					AI1A				AI1B				AI2A				AI2B				AI3A				AI3B			
Top Terminal Numbers	T1	T2	T3	T4	T5	T6	T7	T8	T9	T10	T11	T12	T13	T14	T15	T16	T17	T18	T19	T20	T21	T22	T23	T24	T25	T26	T27	T28	T29
TPRG Input						1	2	3	4	1	2	3	4	1	2	3	4	1	2	3	4	1	2	3	4	1	2	3	4
HLPRG Input						TX	+I	+V	COM		+I	+V	COM	TX	+I	+V	COM		+I	+V	COM	TX	+I	+V	COM		+I	+V	COM
DIO	1	2	3	4	GND																								

AI1-3 A/B INPUT WIRING OPTIONS

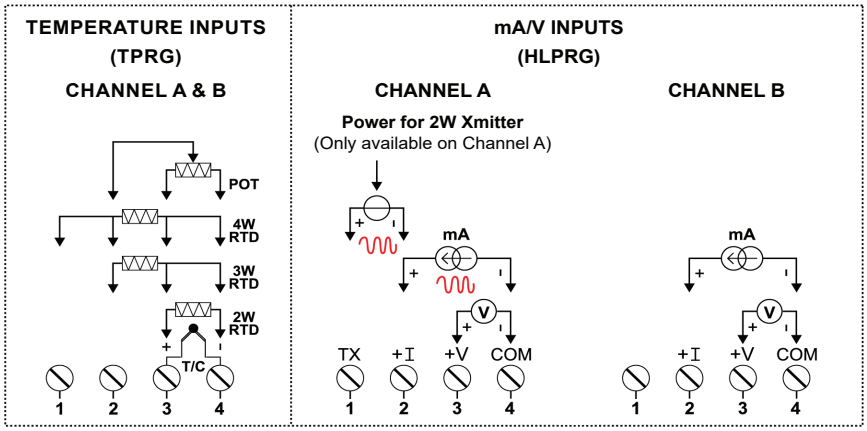

-Input capable of HART passthrough

*TX power is only available on input A of each channel and is only enabled if the input channel is configured as HLPRG (mA/V) input type.

KEY:
COM = Analog Common
GND = Discrete I/O Ground
I = Current Input
TX = Power for 2-wire Transmitter
V = Voltage Input

Figure 10. Connecting the SLA Relay Outputs, MODBUS RTU Output, Analog Outputs and Power (Bottom Terminals)

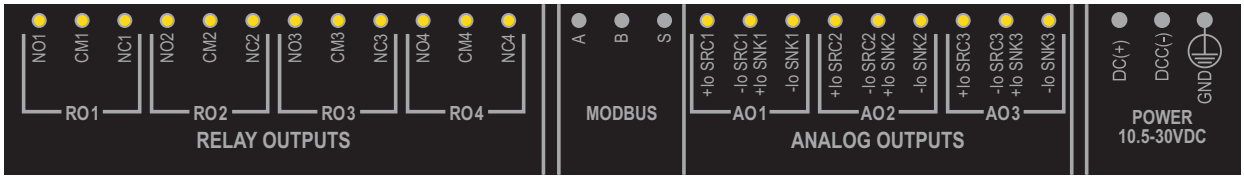

Gray: Not Applicable	RO1			RO2			RO3			RO4			MODBUS			AO1			AO2			AO3			10.5-30VDC		
Bottom Terminal Numbers	B1	B2	B3	B4	B5	B6	B7	B8	B9	B10	B11	B12	B13	B14	B15	B16	B17	B18	B19	B20	B21	B22	B23	B24	B25	B26	B27
RELAY Outputs	NO1	CM1	NC1	NO2	CM2	NC2	NO3	CM3	NC3	NO4	CM4	NC4															
Modbus RTU (optional)													A	B	S												
ANALOG Output (optional)																+IO SRC1	-IO SRC1 +IO SNK1	-IO SNK1	+IO SRC2	-IO SRC2 +IO SNK2	-IO SNK2	+IO SRC3	-IO SRC3 +IO SNK3	-IO SNK3			
10.5-30VDC Power																									DC+	DCC-	GND

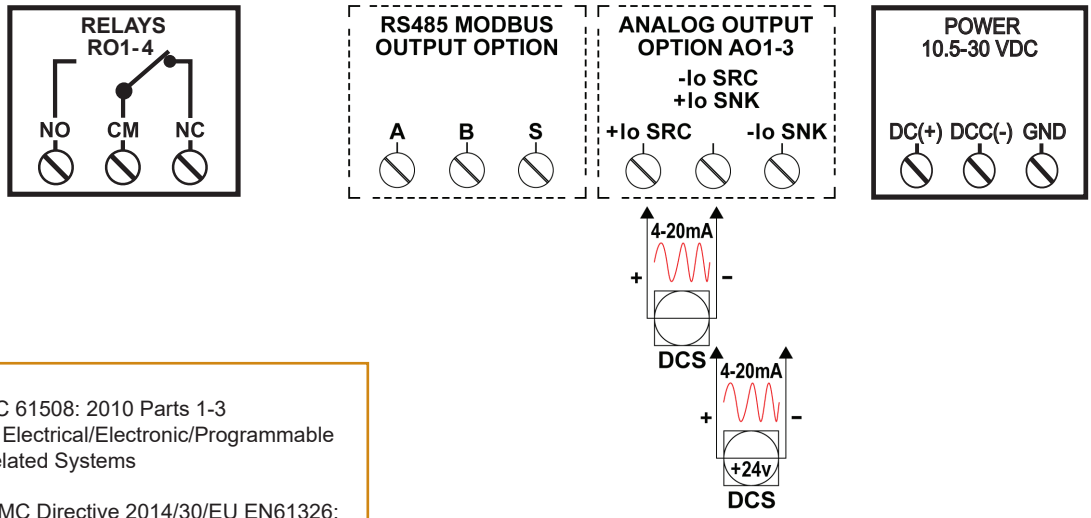

Certifications

exida Certified - IEC 61508: 2010 Parts 1-3 Functional Safety of Electrical/Electronic/Programmable Electronic Safety-Related Systems

CE Conformant - EMC Directive 2014/30/EU EN61326; Low Voltage Directive - 2014/35/EU EN61010; ROHS

Factory Mutual – FM Approved – cFMus (US/Canada), Non-Incendive – Class I, Division 2, Groups A, B, C, D Temperature Code: T4@85°C Max. Op. Ambient Suitable for use in General Locations and Hazardous 'Classified' Locations when mounted in suitable protective enclosures

KEY:

CM = Relay Common	NO = Normally Open
DC = Power Input	SNK = Current Sink
DCC = Power Input	SRC = Current Source
GND = Ground (Case)	A = MODBUS Signal
IO = Current Output	B = MODBUS Signal
NC = Normally Closed	S = MODBUS Shield

Figure 11. *Installation Dimensions (The SLA fits standard Top-hat type DIN rails)*

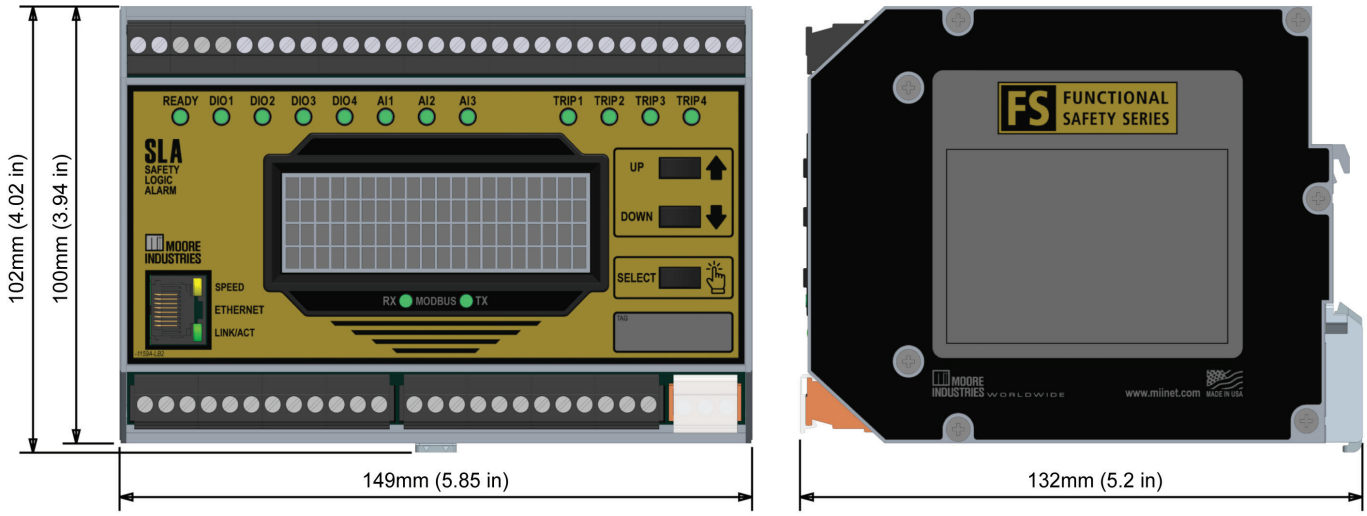

SSX/SST Functional Safety Series Isolators and Splitter

Part of Moore Industries' FS Functional Safety Series, the exida® approved, SIL 3 capable 2-wire (loop powered) SSX and 4-wire (line/mains powered) SST Safety Isolators and Splitters provide isolation and signal conversion for your SIS (Safety Instrumented System) needs. These units protect and enhance loops and also pass valuable HART® data from the field transmitter to host systems and vice-versa.

The SSX is a 2-wire isolator, drawing power from the output side of the loop. The SST is a 4-wire unit powered by 24DC, 117AC or 230AC and is designed for applications where line/mains power is readily available, such as the back of a panel or inside of a control room.

Features:

- exida® Certified IEC 61508:2010
- Comprehensive FMEDA Certified Safety Data
- Valuable HART data not lost - Built-in HART pass-through technology
- Split signals Between Two Locations
- RFI/EMI Protection
- Transmitter Excitation
- Rugged Metal DIN Housing

STA Functional Safety Trip Alarm

The exida® certified SIL 2/3 capable STA Safety Trip Alarm performs as a logic solver and acts on potentially hazardous process conditions in your SIS. The STA models accept a signal input from transmitters, temperature sensors and a wide array of other monitoring and control instruments.

Features:
- exida® certified to IEC 61508:2010
- Dual process alarms, one fault alarm
- Site-programmable with password protection
- Combined alarm trip and transmitter
- Large 5-digit process and status readout

STZ Functional Safety Dual Input Smart HART® Temperature Transmitters

Part of Moore Industries' FS Functional Safety Series, the SIL 2/3 capable STZ Functional Safety Dual Input Smart HART® Temperature Transmitters for your SIS (Safety Instrumented System) configure quickly and easily to accept a single or dual input from a wide array of sensors and analog devices located in hazardous and nonhazardous areas.

Features:
- exida® certified to IEC 61508:2010
- Comprehensive FMEDA certified safety data
- Associated Intrinsically-Safe input option
- Dual sensor input
- HART 7 compliant & HART Access Control
- 20-bit input resolution delivers exceptional digital accuracy
- HART & DTM Programmable
- Device Intelligence
- Resistance and Potentiometer Devices
- Direct Millivolt sources
- Accepts 14 RTD types, 9 thermocouple types