Product Data Sheet
PS-001482, Rev M
April 2025

Micro Motion™ Compact Density Meters

Peak performance precision density meter

Unparalleled real-world performance

- Superior application performance via traceable calibrations, performed at combined pressure and temperature conditions
- OIML R117-1 approved for MID conformance
- ISO/IEC 17025 accredited calibration available

Superior multi-variable I/O, meter health, and application capabilities

- Flow rate indication (velocity/volume flow) ensures sample integrity
- Internal diagnostics for fast verification of meter health and installation
- Application-specific factory configurations ensure fit-for-purpose operation

Installation flexibility and compatibility

- Fluid, process and environmental effects are minimized to ensure superb measurement confidence
- Supports multiple protocols for connection to DCS, PLC, and flow computers
- Retrofit option available for Micro Motion 7835 and 7845 liquid density meters
- Optional stainless steel transmitter housing for corrosion resistance in harsh environments

MICRO MOTION™

EMERSON™

Micro Motion Compact Density Meters

Compact Density Meters use the Micro Motion dual curved-tube meter technology to measure density. These meters use a multi-variable measurement system, designed for fiscal metering of high-value products such as crude oil, refined hydrocarbons, alcohol, and many aggressive process liquids.

Application configurations

You can preselect an application-specific configuration for your meter from a wide range of options.

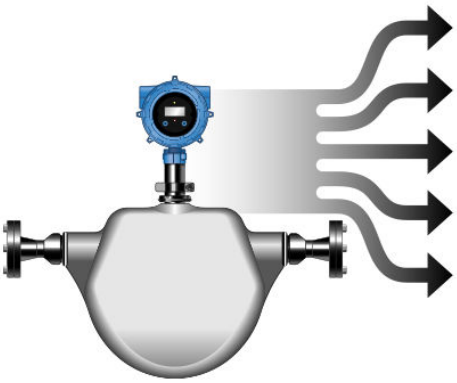

Density
Referred Density
Specific Gravity
Flow rate indication (velocity)
° API
% Concentration
% Alcohol by Volume (ABV)
° Brix, ° Baume, ° Plato

Transmitter options

Standard integral mount and available remote mount transmitter supports Time Period Signal (TPS), 2-wire TPS, Analog (4–20 mA), HART®, *Wireless*HART®, and Modbus® RS-485 communications.

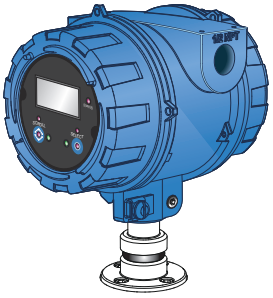

Meter diagnostics

Ensure measurement health through Known Density Verification (KDV) and other meter and installation diagnostic capabilities.

Retrofit capabilities

The retrofit option has the same face-to-face dimensions as the Micro Motion 7835 and 7845 density meters. Available remote mount electronics matches 7835 and 7845 height from pipe centerline.

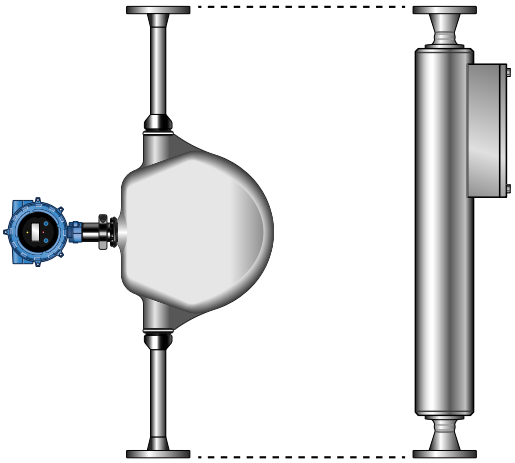

Thermal insulation

The CDM is available with a soft, weather-proof insulating jacket that is easily fitted to all CDM versions with a standard 316L stainless steel case (Case option code M) to maintain stable temperatures and achieve optimal performance.

Accreditation and standards

Accredited calibrations are in compliance with domestic and international standards.

- ATEX, CSA, IECEx
- OIML R117-1 (MID)
- HART®, *Wireless*HART, Modbus®
- NACE
- NORSOK
- ISO/IEC/17025 accreditation available

ProLink™ III software: a configuration and service tool

ProLink III software is an easy-to-use interface that allows you to view key process variables and diagnostics data for your meter. For more information on ordering the software, contact your local sales representative or email customer support at flow.support@emerson.com.

Operating principle

Tube vibration

- Dual, parallel tubes vibrate at their natural frequency.
- The natural frequency changes with the density of the liquid inside the tubes.

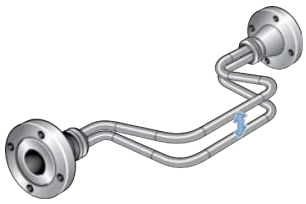

Density calibration

- Micro Motion transmitters accurately measure time period.
- Measured time periods are converted into density readings using meter calibration coefficients.
- Multiple calibration points ensure optimum meter performance.

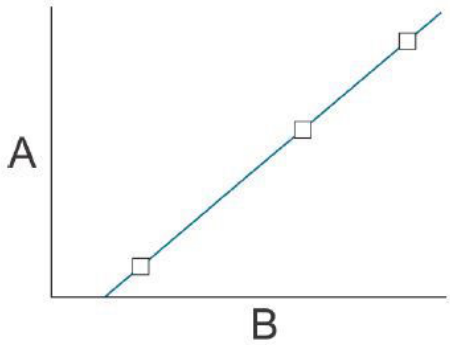

A. Density (kg/m^3)
B. Time period = 1 / frequency

Flow rate indication (velocity/volume flow)

- Measuring the twist in the vibrating tubes gives an indication of the liquid flow rate (velocity/volume flow).

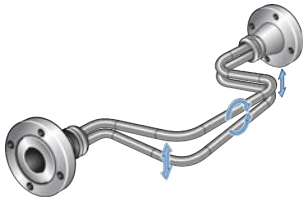

Performance specifications

Density measurement

Specification	CDM100P (Peak performance precision density meter)	CDM100M (General purpose precision density meter)
Accuracy (liquid)	±0.1 kg/m^3 (±0.0001 g/cm^3)	±0.2 kg/m^3 (±0.0002 g/cm^3)
Repeatability	±0.02 kg/m^3 (±0.00002 g/cm^3)	±0.02 kg/m^3 (±0.00002 g/cm^3)
Operating density range	0–3,000 kg/m^3 (0–3 g/cm^3)	▪ TPS transmitter versions (ChB and 2-wire): 0-1,000 kg/m^3 (0–1 g/cm^3) ▪ Analog/Discrete transmitter versions: 0–3,000 kg/m^3 (0–3 g/cm^3)
Process temperature effect (corrected)(1)	▪ ±0.005 kg/m^3 per °C ▪ ±0.278 kg/m^3 per 100 °F	▪ ±0.015 kg/m^3 per °C ▪ ±0.834 kg/m^3 per 100 °F
Sensor maximum working pressure(2)	3,625 psig (250 barg) or flange limit	1,500 psig (103 barg) or flange limit
Process pressure effect (corrected)(3)	▪ ±0.003 kg/m^3 per bar ▪ ±0.021 kg/m^3 per 100 psi	▪ ±0.006 kg/m^3 per bar ▪ ±0.042 kg/m^3 per 100 psi

(1) *Process temperature effect is the maximum measurement uncertainty due to process fluid temperature changing away from the reference calibration temperature of 68 °F (20 °C).*
(2) *Sensor maximum working pressure reflects the highest possible pressure rating for a given sensor. Process connection type and environmental and process fluid temperatures may reduce the maximum rating. All sensors comply with ASME B31.3 piping code and European Union Directive 2014/68/EU on Pressure Equipment (PED).*
(3) *Process pressure effect is the maximum residual measurement uncertainty due to process fluid pressure changing away from the reference calibration pressure of 1 bar, after having performed active pressure compensation. For proper setup and configuration, refer to the Micro Motion Compact Density Meters (CDM) Configuration and Use Manual at www.emerson.com/density.*

Temperature measurement

Specification	Value
Operating temperature range	–58 °F to +400 °F (–50 °C to +204 °C)
Integral temperature sensor	▪ Traceable calibration ▪ Technology: 100 Ω RTD ▪ Accuracy: BS1904 Class, DIN 43760 Class A (±0.15 +0.002 x Temp °C)
Case temperature sensors(1)	▪ Technology: 3 x 100 Ω RTD ▪ Accuracy: BS1904 Class, DIN 43760 Class B (±0.30 +0.005 x Temp °C)

(1) *Case temperature sensors are used for environmental temperature effect correction in applications where the case temperature measurement does not need to be traceable and/or accredited. Where accreditation and measurement traceability are required, these sensors are used for diagnostics purposes only and do not perform any correction on the density measurement.*

Case pressure

Specification	Value
Maximum case working pressure	650 psig (44.8 barg)
Typical burst pressure (case)	2,598 psig (179 barg)

Pressure relief

When the process fluid pressure is higher than the case burst pressure, the use of a rupture disk is recommended.

For high pressure sensor models, Micro Motion has standardized rupture disks on all sensor cases. For other models, the end user must determine the suitability of a rupture disk for their application.

Some customers connect a pipeline to the rupture disk to help contain escaping process fluid. Customers must determine if this is needed for their application.

Be aware when other devices are connected to this same rupture disk pipeline, and they experience a venting of the process fluid, or there is any other substantial increase in pressure in this piping system, there is a possibility the Compact Density Meter rupture disk may burst unintentionally from this externally applied pressure. Follow local piping and safety protocols regarding safe pressure relief management.

The standard rupture activation pressure is 63.8 psig (4.4 barg). For more information about rupture disks, contact customer service.

WARNING

High-pressure fluid escaping from the sensor can cause severe injury or death.

- **Orient the sensor so that personnel and equipment will not be exposed to any discharge along the pressure relief path.**
- **Stay clear of the rupture disk pressure relief area.**

Important

When using a rupture disk, the housing can no longer assume a secondary containment function.
Keep the rupture disk installed at all times, as it would otherwise be necessary to re-purge the case.

If the rupture disk is activated by a tube breach, the seal in the rupture disk will be broken. If this happens, remove the Compact Density Meter from service.

NOTICE

Removing the purge fitting, blind plug, or rupture disks compromises the Ex-i Safety Certification, the Ex-tc Safety Certification, and the IP-rating of the Compact Density Meter. Any modification to the purge fitting, blind plug, or rupture disks must maintain a minimum of IP66/IP67 Ratings.

Diagnostic flow rate indication (velocity/volume flow)

Expected accuracy is within ±5% of reading.

Typical flow recommendations	Flow rate	Velocity
Minimum	3 gpm (700 l/hr)	1.5 ft/sec (0.5 m/sec)
Normal	11 gpm (2,500 l/hr)	5 ft/sec (1.5 m/sec)
Maximum	75 gpm (17,000 l/hr)	30 ft/sec (9 m/sec)

Note

For fluids that contain abrasive particles, velocity should be kept below 10 ft/s (3 m/s).

Transmitter specifications

Available transmitter versions

For more information on the transmitter outputs and ordering codes, see the product ordering information.

Note
mA Output is linear with process from 3.8 to 20.5 mA, per NAMUR NE-43 (February 2003).

Analog

Typical application	Output channels		
	A	B	C
▪ General purpose measurement ▪ DCS/PLC connection	4–20 mA + HART® (passive)	4–20 mA (passive)	Modbus®/RS-485

Discrete

Typical application	Output channels		
	A	B	C
▪ General purpose measurement with output switch ▪ DCS/PLC connection	4–20 mA + HART (passive)	Discrete Output (passive)	Modbus/RS-485

Time Period Signal (TPS)

Typical application	Output channels		
	A	B	C
▪ Fiscal/Custody Transfer ▪ Flow computer connection	4–20 mA + HART (passive)	Time Period Signal (TPS) (passive)	Modbus/RS-485

The 4-20 mA Output cannot be configured to output line density.

2-wire TPS

Typical application	Output channels		
	A	B	C
▪ Fiscal/Custody Transfer ▪ Flow computer connection	Disabled	4-wire 100 Ω, RTD	

For the 2-wire transmitter version, TPS is superimposed on power lines.

Local display

Design	Features
Physical	■ Segmented two-line LCD screen ■ Can be rotated on transmitter, in 90-degree increments, for ease of viewing ■ Suitable for hazardous area operation ■ Optical switch controls for hazardous area configuration and display ■ Glass lens ■ Three-color LED indicates meter and alert status
Functions	■ View process variables ■ View and acknowledge alerts ■ Configure mA and RS-485 outputs ■ Supports Known Density Verification (KDV) ■ Supports multiple languages

Process measurement variables

Variables	Value
Standard	■ Density ■ Time period ■ Temperature ■ Drive gain ■ External temperature input ■ External pressure input ■ Flow rate (velocity/volume flow)
Derived	The derived output variables vary depending on the application configuration of the meter. ■ Referred density (API Tables 53A, 53B) ■ Referred density (Concentration) ■ Specific gravity (Concentration) ■ %Alcohol by Volume (ABV) ■ Alcohol proof ■ °API ■ °Balling ■ °Baume ■ °Brix ■ °Plato ■ %Mass ■ %Solids ■ °Twaddle ■ User-defined calculation output

Note

- For the TPS transmitter version, process measurement variables are limited to Time Period, Temperature, and Flow.
- For the 2-wire transmitter version, process measurement variables are limited to Time Period and Temperature.

Additional communication options

The following communications accessories need to be purchased separately from the meter.

Type	Description
*Wireless*HART®	*Wireless*HART is available via the THUM adapter
HART® Tri-Loop	Three additional 4-20 mA Outputs are available via connection to a HART Tri-Loop

Hazardous area approvals

Ambient and process temperature limits are defined by temperature graphs for each meter and electronics interface option. Refer to the detailed approval specifications, including temperature graphs for all meter configurations, and safety instructions. See the product page at www.emerson.com.

ATEX, CSA, and IECEx approvals

ATEX	
Zone 1 Intrinsically safe	With display (Analog, TPS, Discrete versions only) ▪ II 2G Ex ib IIC T4...T1 Gb (–40 °C to +65 °C) ▪ II 2D Ex ib IIIC T(1)°C Db ▪ IP 66/67
	Without display (All transmitter versions) ▪ II 2G Ex ib IIC T6...T1 Gb (–40 °C to +65 °C(2)) ▪ II 2D Ex ib IIIC T(1)°C Db ▪ IP 66/67
Zone 1 Flameproof	With display (Analog, TPS, Discrete versions with stainless steel transmitter housing material only) ▪ II 2G Ex db [ib] IIC T6...T1 Gb (–40 °C to +65 °C) ▪ II 2D Ex tb IIIC T(1)°C Db ▪ IP 66/67
	Without display (All transmitter versions except 2-wire TPS) ▪ II 2G Ex ib IIC T6...T1 Gb (–40 °C to +65 °C(2)) ▪ II 2D Ex ib IIIC T(1)°C Db ▪ IP 66/67

(1) *See the ATEX or IECEx instructions shipped with the product for the maximum surface temperature (T) for dust.*
(2) *Maximum ambient temperature of 2-wire TPS transmitter version is 167 °F (75 °C).*

CSA	
Intrinsically safe	With display (Analog, TPS, Discrete versions only) or without display (all transmitter versions) ▪ Class I, Division 1, Groups A, B, C & D ▪ Class I, Division 2, Groups A, B, C & D ▪ Class II, Division 1, Groups E, F, & G
Explosion proof	With display (Analog, TPS, Discrete versions and stainless steel transmitter housing material only) or without display (all transmitter versions except 2-wire TPS) ▪ Class I, Division 1, Groups C & D ▪ Class I, Division 2, Groups A, B, C & D ▪ Class II, Division 1, Groups E, F & G

IECEx	
Zone 1 Intrinsically safe	With display (Analog, TPS, Discrete versions only) ■ Ex ib IIC T4...T1 Gb (–40 °C to +65 °C) ■ Ex ib IIIC T(1)°C Db ■ IP66/IP67
	Without display (All transmitter versions) ■ Ex ib IIC T6...T1 Gb (–40 °C to +65 °C(2)) ■ Ex ib IIIC T(1) °C Db ■ IP66/IP67
Zone 1 Flameproof	Without display (All transmitter versions except 2-wire TPS) ■ Ex db [ib] IIC T6...T1 Gb (–40 °C to +65 °C) ■ Ex tb IIIC T(1) °C Db ■ IP66/IP67
	With display (Analog, TPS, Discrete versions and stainless steel transmitter housing material only) ■ Ex db [ib] IIC T6...T1 Gb (–40 °C to +65 °C) ■ Ex tb IIIC T(1) °C Db ■ IP66/IP67

(1) *See the ATEX or IECEx instructions shipped with the product for the maximum surface temperature (T) for dust.*
(2) *Maximum ambient temperature of 2-wire TPS transmitter version is 167 °F (75 °C).*

Required barriers and isolators for hazardous area installations

When installing the meter in a hazardous area, either safety barriers or galvanic isolators must be installed between the meter and the signal processing equipment. Micro Motion provides the required barriers and isolators for purchase according to the transmitter output type.

Table 1: Safety barrier/galvanic isolator kits for 4-wire CDM – Transmitter output codes B, C, D

Model code	Description	Barrier/Isolator	Output	Notes
BARRIERSETAA	Barrier set, including barriers for all intrinsically safe transmitter versions (CH B: mA, TPS, or DO)	MTL7728P+	mA + HART®	For grounding precautions, see the CDM installation manual.
		MTL7728P+	mA / TPS / DO	
		MTL7761AC	RS-485	
		MTL7728P+	Power	
ISOLATORSETBB	Isolator set, including isolators for intrinsically safe Analog version (CH B: mA)	MTL5541	mA + HART	RS-485 barrier is not isolated
		MTL5541	mA	
		MTL7761AC	RS-485	
		MTL5523	Power	
ISOLATORSETCC	Isolator set, including isolators for intrinsically safe Time Period Signal (TPS)/ Discrete versions (CH B: TPS or DO)	MTL5541	mA + HART	RS-485 barrier is not isolated
		MTL5532	TPS/DO	
		MTL7761AC	RS-485	
		MTL5523	Power	

Table 2: Safety barrier/galvanic isolator kits for 2-wire CDM – Transmitter output code F

Model code	Description	Barrier/Isolator	Output	Notes
BARRIER7787	Barrier for 2-wire meter, TPS/Power output	MTL7787+	TPS/Power	Quantity (1)
BARRIER7764	Barrier set for 2-wire meter, 4-wire RTD output	MTL7764+	RTD	Quantity (2)

Environmental specifications

Type	Rating
Humidity limits	5 to 95% relative humidity, non-condensing at 140 °F (60 °C)
Ambient temperature limits	-40 °F (-40 °C) to 149 °F (65 °C)
Ambient temperature effect	Effect on mA output shall not exceed ±0.005% of span per degree Celsius
Vibration limits	Meets IEC 68.2.6, endurance sweep, 5 to 2,000 Hz, 50 sweep cycles at 1.0 g
Ingress protection rating	IP66/67, NEMA4X aluminum or stainless steel housing

Thermal insulation options

For optimal performance, thermally insulate the meter and the inlet and bypass-loop pipeline to maintain stable temperatures. Micro Motion offers a soft, weather-proof insulating jacket that is easily fitted to all CDM versions with a standard 316L stainless steel case (Case option code M).

Model code	Description
INSJKTCDM100	Insulation Jacket, CDM100 Case Option M

Power requirements

Following are the DC power requirements to operate the meter:

Meter type	Description
Explosion-proof/flameproof meters	▪ 24 VDC, 0.65 W typical, 1.1 W maximum ▪ Minimum recommended voltage: 21.6 VDC with 1,000 ft of 24 AWG (300 m of 0.20 mm^2) power-supply cable ▪ At startup, power source must provide a minimum of 0.5 A of short-term current at a minimum of 19.6 V at the power input terminals
Intrinsically safe meters	▪ 24 VDC, 0.7 W typical with 250 Ω barrier, 0.96 W maximum with 250 Ω barrier[(1)] ▪ Minimum recommended voltage: 22.8 VDC with 1,000 ft of 22 AWG (300 m of 0.25 mm^2) power-supply cable

(1) *For power requirements specific to the 2-wire TPS transmitter version, refer to the 2-Wire TPS CDM Installation Supplement.*

Physical specifications

Materials of construction

Wetted parts	
Process connections	316L stainless steel
Measurement tubes	■ CDM100P option: Nickel alloy N06022 ■ CMD100M option: 316L stainless steel

Non–wetted parts	
Sensor housing	316L stainless steel
Transmitter housing	316L stainless steel or polyurethane-painted aluminum

Weight

The meter weights mentioned below assume ANSI CL600 weld-neck, raised-face flanges, and integral transmitter electronics. Meters with other options may have weights that differ slightly from those listed.

Meter type	Weight with aluminum housing	Weight with stainless steel housing
Compact density meter (standard option)	Approximately 28 lbs (13 kg)	Approximately 34 lbs (16 kg)
Compact density meter (7835/7845 retrofit model with spools)	Approximately 31 lbs (14 kg)	Approximately 37 lbs (17 kg)

Dimensions

These dimensional drawings are intended to provide a basic guideline for sizing and planning. Complete and detailed dimensional drawings can be found through the product drawings link in our online store at Flow Measurement Sizing and Selection Tool.

Depending on the flange connection, the face-to-face dimension may vary for the CDM standard option.

Compact density meter dimensions – standard option

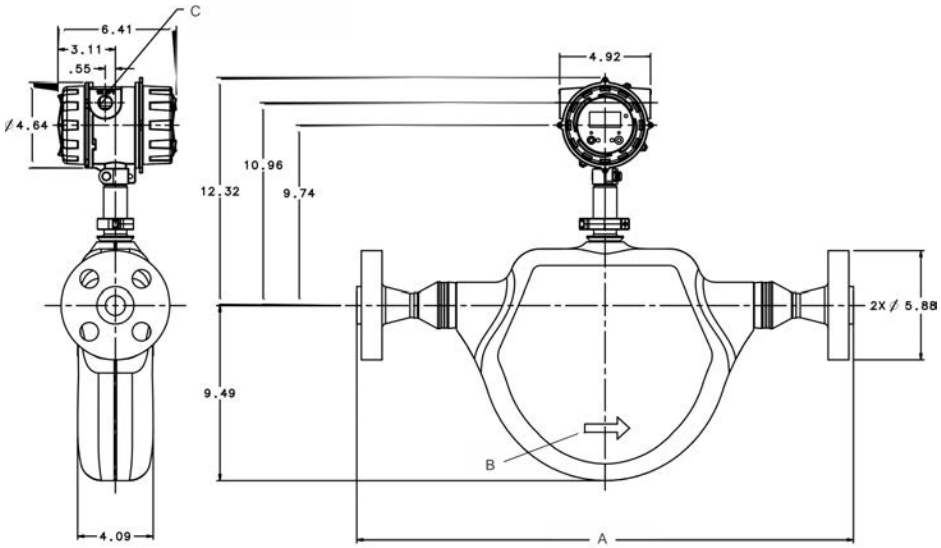

A. Dim. A — see table below
B. Nominal flow direction — the meter can be configured for normal (forward), reversed, or bi-directional flow
C. 2 x 1/2-14 NPT female electronic interface (M20 adapters are available as an option.

Note
Drawing dimensions are in inches.

Flange fitting type	Dim. A [± 0.125 in (3 mm)]
1-inch, CL900, ASME B16.5, F316/316L, Weld neck flange	26.9 (683)
1-inch, CL900, ASME B16.5, F316/316L, Weld neck flange, RTJ face	26.9 (683)
1-inch, CL600, ASME B16.5, F316/316L, Weld neck flange	24.5 (623)
1-inch, CL300, ASME B16.5, F316/316L, Weld neck flange	24.0 (610)
1-inch, CL600, ASME B16.5, F316/316L, Weld neck flange, RTJ face	24.8 (627)
1-inch, CL600, ASME B16.5, F316/316L, Weld neck flange, Raised face 63-125, Raised face finish	24.8 (627)
1-inch, CL150, ASME B16.5, F316/316L, Weld neck flange	23.5 (597)
DN25, PN40, EN 1092-1, F316/316L, Weld neck flange, Type B1	22.5 (573)
DN25, PN40, EN 1092-1, F316/316L, Weld neck flange, Type D	22.5 (573)
DN25, PN100, EN 1092-1, F316/316L, Weld neck flange, Type B2	23.9 (608)

Compact density meter dimensions – 7835/45 retrofit option

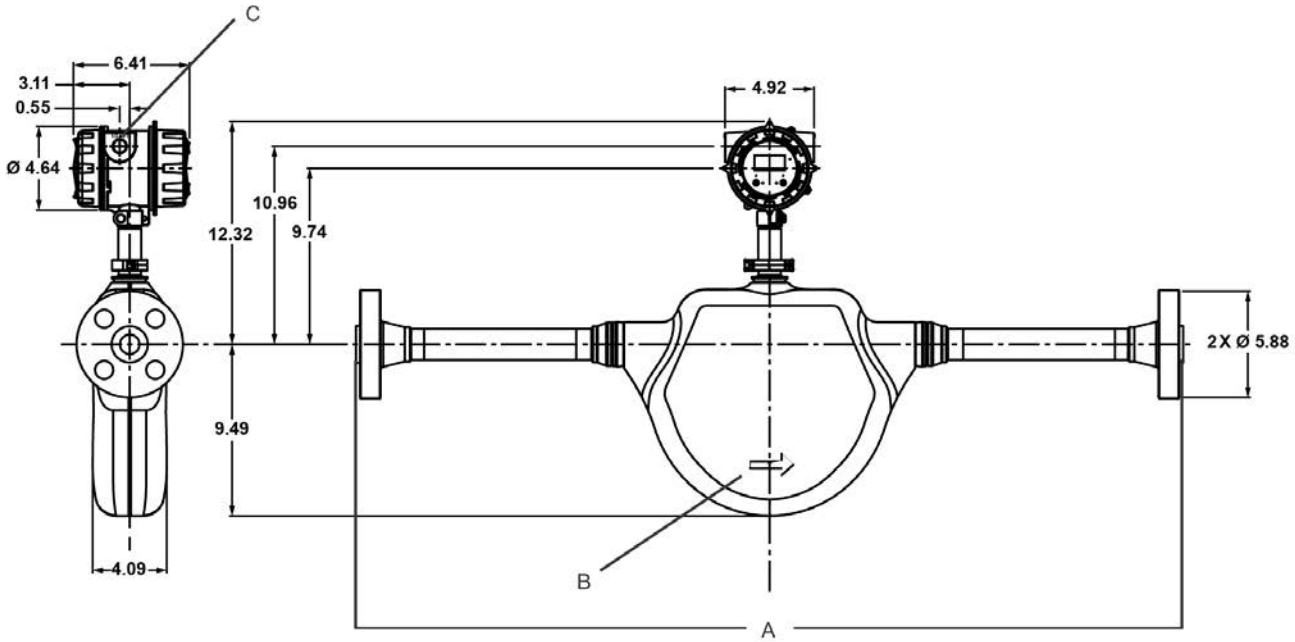

A. Dim. A — face to face is up to 40.4 inches (1,026 mm) ± 0.125 in (3 mm)
B. Nominal flow direction — the meter can be configured for normal (forward), reversed, or bi-directional flow
C. 2 x 1/2-14 NPT female electronic interface (M20 adapters are available as an option.

Note
Drawing dimensions are in inches.

Ordering information

CDM100P - Peak Performance Precision Density Meter

Model	Description
CDM100P	Micro Motion Compact Density Meter, 1-inch (25mm) nickel alloy manifold and measurement tubes with stainless steel fittings

Code	Process connection
A18	1-inch, CL900/1500, ASME B16.5, F316/316L, Weld neck flange
A25	1-inch, CL900/1500, ASME B16.5, F316/316L, Weld neck flange, RTJ Face
330	1-inch, CL600, ASME B16.5, F316/316L, Weld neck flange
329	1-inch, CL300, ASME B16.5, F316/316L, Weld neck flange
A24	1-inch, CL600, ASME B16.5, F316/316L, Weld neck flange, RTJ Face
A21	1-inch, CL600, ASME B16.5, F316/316L, Weld neck flange, Raised face 63-125, Raised face finish
179	DN25, PN40, EN 1092-1, F316/316L, Weld neck flange, Type B1
311	DN25, PN40, EN 1092-1, F316/316L, Weld neck flange, Type D
180	DN25, PN100, EN 1092-1, F316/316L, Weld neck flange, Type B2

Code	Process connection
999[1]	ETO process connection

(1) *Requires factory option X.*

Code	Case option
M	316L stainless steel case
K	316L stainless steel case with purge fittings (one ½-inch NPT female)
R	316L stainless steel case with rupture disk (one ½-inch NPT male)
C[1]	7835/45 retrofit model with standard 316L stainless steel sensor case
D[1]	7835/45 retrofit model with purge fittings (½-inch NPT) 316L stainless steel sensor case

(1) *Available only with process connection codes 329, 330, and A18.*

Code	Transmitter output option
B[1]	Integral transmitter, Channel B = Time Period Signal, Channel A = mA + HART®, Channel C = RS485 Modbus®
C	Integral transmitter, Channel B = mA output, Channel A = mA + HART, Channel C = RS485 Modbus
D	Integral transmitter, Channel B = Discrete output, Channel A = mA + HART, Channel C = RS485 Modbus
F	Integral electronics, 2-wire time period signal output, superimposed on power (no internal calculations)

(1) *For the TPS version, the 4-20 mA output cannot be configured to output line density.*

Code	Display option
A	No display
B[1]	Two-line display (non-backlit)

(1) *When selected with Transmitter Housing Option code Z, available only with approvals codes Z, B, E, 2, M, and G(R1). Not available with Transmitter Output Options code A or F.*

Code	Approvals
For all transmitter output options	
M	Safe area - no hazardous area approval
Z	ATEX – Intrinsically safe (zone 1)
B	CSA (US and Canada) – Intrinsically safe Class 1 Div. 1 Groups B, C, D
E	IECEx – Intrinsically safe (zone 1)
2	CSA (US and Canada) Class 1 Div. 2
For transmitter output options B, C, and D	
A	CSA (US and Canada) – Explosion-proof Class 1 Div. 1 Groups C, D (US and Canada)
F	ATEX – Zone 1 flameproof
I	IECEx – Zone 1 flameproof
G	Country-specific approval. Requires an R1 or R2 selection from the *Special tests and certificates, tests, calibrations and services (optional)* table.

Also see Required barriers and isolators for hazardous area installations.

Code	Application configuration[1]
Available with all Transmitter output options	
00	No Application configuration

Code	Application configuration[1]
95	Process temperature (4 mA = 0 °C, 20 mA = 200 °C)
XX[2]	ETO analog output configuration (customer data required)
Available with transmitter output options B only	
96	Process temperature (4 mA = –50 °C, 20 mA = 200 °C)
97	Process temperature (4 mA = –50 °C, 20 mA = 150 °C)
98	Process temperature (4 mA = 0 °C, 20 mA = 100 °C)
Available with transmitter output options C and D only	
11	Degrees API (4 mA = 0°, 20 mA = 100°) (Process temperature = 0 °C to 60 °C)
12	Line Density (4 mA = 500 kg/m^3, 20 mA = 1500 kg/m^3) (Process temperature = -40 °C to +140 °C)
13	Referred Density to API tables (metric) (4 mA = 500 kg/m^3, 20 mA = 1500 kg/m^3) (Process temperature = -40 °C to +140 °C)
21	% Alcohol (4 mA = 0%, 20 mA = 20%) (Process temperature = 0 °C to 40 °C)
22	% Alcohol (4 mA = 50%, 20 mA = 100%) (Process temperature = 40 °C to 70 °C)
23	% Alcohol (4 mA = 80%, 20 mA = 100%) (Process temperature = 50 °C to 90 °C)
24	Alcohol proof (4 mA = 100, 20 mA = 200) (Process temperature = 50 °C to 70 °C)
25	Alcohol proof (4 mA = 160, 20 mA = 200) (Process temperature = 50 °C to 90 °C)
26	% Methanol concentration (4 mA = 35%, 20mA = 60%) (Process temperature = 0 °C to 40 °C)
27	% Ethylene Glycol concentration (4 mA = 10%, 20 mA = 50%) (Process temperature = -20 °C to 40 °C)
31	Brix (sucrose) (4 mA = 0°, 20 mA = 40°) (Process temperature = 0 °C to 100 °C)
32	Brix (sucrose) (4 mA = 30°, 20 mA = 80°) (Process temperature = 0 °C to 100 °C)
41	Balling (4 mA = 0°, 20 mA = 20°) (Process temperature = 0 °C to 100 °C)
51	% NaOH Concentration (4mA = 0%, 20 mA = 20%) (Process temperature = 0 °C to 50 °C)
52	% H2SO4 Concentration (4 mA = 0%, 20 mA = 10%) (Process temperature = 0 °C to 38 °C)
53	% H2SO4 Concentration (4 mA = 75%, 20 mA = 94%) (Process temperature = 24 °C to 38 °C)
64	% HFCS - 42 (4 mA = 0%, 20 mA = 50%) (Process temperature = 0 °C to 100 °C)
65	% HFCS - 55 (4 mA = 0%, 20 mA = 50%) (Process temperature = 0 °C to 100 °C)
66	% HFCS – 90 (4 mA = 0%, 20 mA = 50%) (Process temperature = 0° to 100 °C)
71	Plato (4 mA = 0°, 20 mA = 30°) (Process temperature = 0 °C to 100 °C)

(1) *When the transmitter output options code is B, C, or D, the chosen application configuration code low and high limits are also programmed as the channel A mA output 4 mA and 20 mA points.*
(2) *Requires factory option X.*

Code	Language (manual and software)
Transmitter display language English	
E	English installation manual and English configuration manual
I	Italian installation manual and English configuration manual
M	Chinese installation manual and English configuration manual
P	Portuguese installation manual and English configuration manual
R	Russian installation manual and English configuration manual
Transmitter display language French	

Code	Language (manual and software)
F	French installation manual and English configuration manual
Transmitter display language German	
G	German installation manual and English configuration manual
Transmitter display language Spanish	
S	Spanish installation manual and English configuration manual

Code	Sensor calibration options
A	Standard ±0.1kg/m^3 (±0.0001g/cc) density accuracy
M(1)	MID evaluated component (OIML R117) - Requires installation with an approved power supply

(1) *MID evaluated component (OIML R117) - Requires installation with an approved power supply. See the CDM100 Measuring Instruments Directive Supplement for more information.*

Code	Transmitter housing option
Z	Integral, aluminum alloy
B	Integral, stainless steel

Code	Conduit connections
Z	Standard 1/2-inch NPT fittings (no adapters)
B	M20 stainless steel adapters

Code	Factory options
Z	Standard product
X	ETO product

Code	Special tests and certificates, tests, calibrations, and certificates (all are optional)(1)
Material Quality Examination Tests and Certificates (select any from this group)	
MC	Material Inspection Certificate 3.1 (Supplier Lot Traceability per EN 10204)
NC	NACE Certificate 2.1 (MR0175 and MR0103)
Pressure testing (select any from this group)	
HT	Hydrostatic Test Certificate 3.1
Radiographic examination (select only one from this group)	
RE	X-Ray Package 3.1 (Process connection Only: Radiographic Examination Certificate; Weld map; Radiographic Inspection NDE Qualification)
RT	X-Ray Package 3.1 (Process connection only; Radiographic Examination Certificate with digital image; Weld map; Radiographic Inspection NDE Qualification)
Dye penetrant examination (select only one from this group)	
D1	Dye Penetrant Test Package 3.1 (Process connection only; Liquid Dye Penetration NDE Qualification)
D2	Dye Penetrant Test Package 3.1 (Case only; Liquid Dye Penetration NDE Qualification)
Weld examination	
WP	Weld Procedure Package (Weld Map, Weld Procedure Specification, Weld Procedure Qualification Record, Welder Performance Qualification)
Positive material testing (select only one from this group)	

Code	Special tests and certificates, tests, calibrations, and certificates (all are optional)(1)
PM	Positive Material Test Certificate 3.1 (without carbon content)
Accredited calibration	
IC	ISO/IEC 17025 Accredited Calibration and Certificate
Sensor completion options (select any from this group)	
WG	Witness General
SP	Special Packaging
Instrument tagging	
TG	Instrument Tagging – customer information required (max. 24 characters)
Country-specific approvals (select only one when Approvals option G is selected)	
R1(2) (3)	EAC Zone 1 - Hazardous area approval - intrinsically safe
R2(2) (3)	EAC Zone 1 - Hazardous area approval - flameproof terminal compartment

(1) *Multiple test or certificate options can be selected.*
(2) *Available only with approval G*
(3) *Not available with Transmitter Output Options code F or Transmitter Housing Option B*

CDM100M - General Purpose Precision Density Meter

Model	Description
CDM100M	Micro Motion Compact Density Meter, 1-inch (25 mm), 316L stainless steel manifold and measurement tubes

Code	Process connection
330	1-inch, CL600, ASME B16.5, F316/316L, Weld neck flange
329	1-inch, CL300, ASME B16.5, F316/316L, Weld neck flange
A24	1-inch, CL600, ASME B16.5, F316/316L, Weld neck flange, RTJ Face
A21	1-inch, CL600, ASME B16.5, F316/316L, Weld neck flange, Raised face 63-125, Raised face finish
179	DN25, PN40, EN 1092-1, F316/316L, Weld neck flange, Type B1
311	DN25, PN40, EN 1092-1, F316/316L, Weld neck flange, Type D
180	DN25, PN100, EN 1092-1, F316/316L, Weld neck flange, Type B2
328	1-inch, CL150, ASME B16.5, F316/316L, Weld neck flange
999(1)	ETO process connection

(1) *Requires factory option X.*

Code	Case options
M	316L stainless steel case
K	316L stainless steel case with purge fittings (one 1/2-inch NPT female)
C(1)	7845 retrofit model with standard 316L stainless steel sensor case
D(1)	7835/45 retrofit model with purge fittings (1/2-inch NPT) 316L stainless steel sensor case

(1) *Available only with process connection codes 329 and 330.*

Code	Transmitter output option
B(1)	Integral transmitter, Channel B = Time Period Signal, Channel A = mA + HART®, Channel C = RS485 Modbus®

Code	Transmitter output option
C	Integral transmitter, Channel B = mA output, Channel A = mA + HART, Channel C = RS485 Modbus
D	Integral transmitter, Channel B = Discrete output, Channel A = mA + HART, Channel C = RS485 Modbus
F	Integral electronics, 2-wire time period signal output, superimposed on power (no internal calculations)

(1) *For the TPS version, the 4-20 mA output cannot be configured to output line density.*

Code	Display option
A	No display
B(1)	Two-line display (non-backlit)

(1) *When selected with Transmitter Housing Option code Z, available only with approvals codes Z, B, E, 2, M, and G(R1). Not available with Transmitter Output Options code A or F.*

Code	Approvals
Available with all transmitter output options	
M	Safe area - no hazardous area approval
Z	ATEX – Intrinsically safe (zone 1)
B	CSA (US and Canada) – Intrinsically safe Class 1 Div. 1 Groups B, C, and D
E	IECEx – Intrinsically safe (zone 1)
2	CSA (US and Canada) Class 1 Div. 2
Available with transmitter output option codes B, C, and D	
A	CSA (US and Canada) – Explosion-proof Class 1 Div. 1 Groups C and D (US and Canada)
F	ATEX – Zone 1 flameproof
I	IECEx – Zone 1 flameproof
G	Country-specific approval. Requires an R1 or R2 selection from the *Special tests and certificates, tests, calibrations and services (optional)* table.

Also see Required barriers and isolators for hazardous area installations.

Code	Application configuration(1)
Available with all transmitter output options	
00	No application configuration
95	Process temperature (4 mA = 0 °C, 20 mA = 200 °C)
XX(2)	ETO analog output configuration (customer data required)
Available with transmitter output option code B only	
96	Process temperature (4 mA = –50 °C, 20 mA = 200 °C)
97	Process temperature (4 mA = –50 °C, 20 mA = 150 °C)
98	Process temperature (4 mA = 0 °C, 20 mA = 100 °C)
Available with transmitter output option codes C and D only	
11	Degrees API (4 mA = 0°, 20 mA = 100°) (Process temperature = 0 °C to 60 °C)
12	Line Density (4 mA = 500kg/m^3, 20 mA = 1500 kg/m^3) (Process temperature = -40 °C to +140 °C)
13	Referred Density to API tables (metric) (4 mA = 500 kg/m^3, 20mA = 1500 kg/m^3)(Process temperature = -40 °C to +140 °C)
21	% Alcohol (4 mA = 0%, 20 mA = 20%) (Process temperature = 0 °C to 40 °C)

Code	Application configuration[1]
22	% Alcohol (4 mA = 50%, 20 mA = 100%) (Process temperature = 40 °C to 70 °C)
23	% Alcohol (4 mA = 80%, 20 mA = 100%) (Process temperature = 50 °C to 90 °C)
24	Alcohol proof (4 mA = 100, 20 mA = 200) (Process temperature = 50 °C to 70 °C)
25	Alcohol proof (4 mA = 160, 20 mA = 200) (Process temperature = 50 °C to 90 °C)
26	% Methanol concentration (4 mA = 35%, 20 mA = 60%) (Process temperature = 0 °C to 40 °C)
27	% Ethylene Glycol concentration (4 mA = 10%, 20 mA = 50%) (Process temperature = -20 °C to 40 °C)
31	Brix (sucrose) (4 mA = 0°, 20 mA = 40°) (Process temperature = 0 °C to 100 °C)
32	Brix (sucrose) (4 mA = 30°, 20 mA = 80°) (Process temperature = 0 °C to 100 °C)
41	Balling (4 mA = 0°, 20 mA = 20°) (Process temperature = 0 °C to 100 °C)
51	% NaOH Concentration (4 mA = 0%, 20 mA = 20%) (Process temperature = 0 °C to 50 °C)
52	% H2SO4 Concentration (4 mA = 0%, 20 mA = 10%) (Process temperature = 0 °C to 38 °C)
53	% H2SO4 Concentration (4 mA = 75%, 20 mA = 94%) (Process temperature = 24 °C to 38 °C)
54	% HNO3 Concentration (4 mA = 0%, 20 mA = 40%) (Process temperature = 10 °C to 50 °C)
55	% KOH Concentration (4 mA = 0%, 20 mA = 40%) (Process temperature = 0 °C to 90 °C)
64	% HFCS - 42 (4 mA = 0%, 20 mA = 50%) (Process temperature = 0 °C to 100 °C)
65	% HFCS - 55 (4 mA = 0%, 20 mA = 50%) (Process temperature = 0 °C to 100 °C)
66	% HFCS - 90 (4 mA = 0%, 20 mA = 50%) (Process temperature = 0 °C to 100 °C)
71	Plato (4 mA = 0°, 20 mA = 30°) (Process temperature = 0 °C to 100 °C)

(1) *When the transmitter output options code is B, C or D, the chosen application configuration code low and high limits are also programmed as the channel A mA output 4 mA and 20 mA points.*
(2) *Requires factory option X.*

Code	Language (manual and software)
Transmitter display language English	
E	English installation manual and English configuration manual
I	Italian installation manual and English configuration manual
M	Chinese installation manual and English configuration manual
P	Portuguese installation manual and English configuration manual
R	Russian installation manual and English configuration manual
Transmitter display language French	
F	French installation manual and English configuration manual
Transmitter display language German	
G	German installation manual and English configuration manual
Transmitter display language Spanish	
S	Spanish installation manual and English configuration manual

Code	Sensor calibration options
A	Standard ±0.2 kg/m^3 (±0.0002g/cc) density accuracy
M[1]	MID evaluated component (OIML R117) - Requires installation with an approved power supply

(1) *Requires installation with an approved power supply. See the CDM100 Measuring Instruments Directive Supplement for more information.*

Code	Transmitter housing option
Z	Integral, aluminum alloy
B	Integral, stainless steel

Code	Conduit connections
Z	Standard 1/2-inch NPT fittings (no adapters)
B	M20 stainless steel adapters included

Code	Factory options
Z	Standard product
X	ETO product

Code	Special tests and certificates, tests, calibrations, and services (all optional)(1)
Material quality examination tests and certificates (select any from this group)	
MC	Material Inspection Certificate 3.1 (Supplier Lot Traceability per EN 10204)
NC	NACE Certificate 2.1 (MR0175 and MR0103)
Pressure testing (select any from this group)	
HT	Hydrostatic Test Certificate 3.1
Radiographic examination (select only one from this group)	
RE	X-Ray Package 3.1 (Process connection Only: Radiographic Examination Certificate; Weld map; Radiographic Inspection NDE Qualification)
RT	X-Ray Package 3.1 (Process connection only; Radiographic Examination Certificate with digital image; Weld map; Radiographic Inspection NDE Qualification)
Dye penetrant examination (select only one from this group)	
D1	Dye Penetrant Test Package 3.1 (Process connection only; Liquid Dye Penetration NDE Qualification)
D2	Dye Penetrant Test Package 3.1 (Case only; Liquid Dye Penetration NDE Qualification)
Weld examination	
WP	Weld Procedure Package (Weld Map, Weld Procedure Specification, Weld Procedure Qualification Record, Welder Performance Qualification)
Positive material testing	
PM	Positive Material Test Certificate 3.1 (without carbon content)
PC	Positive Material Test Certificate 3.1 (including carbon content)
Accredited calibration	
IC	ISO/IEC 17025 Accredited Calibration and Certificate
Sensor completion options (select any from this group)	
WG	Witness General
SP	Special Packaging
Instrument tagging	
TG	Instrument Tagging – customer information required (max. 24 characters)
Country-specific approvals (select only one when Approvals option G is selected)	
R1(2)(3)	EAC Zone 1 - Hazardous area approval - intrinsically safe

Code	Special tests and certificates, tests, calibrations, and services (all optional)(1)
R2 (2)(3)	EAC Zone 1 - Hazardous area approval - flameproof terminal compartment

(1) *Multiple add-ons may be selected.*
(2) *Available only with approval G*
(3) *Not available with Transmitter Output Options code F or Transmitter Housing Option B*

PS-001482
Rev. M
April 2025

For more information: **Emerson.com/global**

©2025 Micro Motion, Inc. All rights reserved.

The Emerson logo is a trademark and service mark of Emerson Electric Co. Micro Motion, ELITE, ProLink, MVD and MVD Direct Connect marks are marks of one of the Emerson Automation Solutions family of companies. All other marks are property of their respective owners.

MICRO MOTION™

EMERSON℠