MAGNETROL® / AMETEK®

LEVEL MEASUREMENT SOLUTIONS

Pulsar® Model R86
26 GHz Pulse Burst Radar Level Transmitter

DESCRIPTION

The Pulsar® Model R86 radar transmitter is the latest generation of AMETEK LMS 24 VDC, loop-powered, non- contact radar transmitters. Enhanced performance, proactive diagnostics, and various configuration wizards bring simplicity to an often complex technology.

This latest entry into the radar level measurement field is designed to provide unparalleled performance and ease of use. The 26 GHz Pulsar Model R86 is the perfect complement to the 6 GHz Pulsar Model R96 and Eclipse® Model 706 GWR transmitters. Together, this transmitter family offers the ultimate solution set to those difficult industrial process level applications.

TECHNOLOGY

The Pulsar Model R86 radar transmitter is based on pulse burst radar technology combined with equivalent time sampling circuitry. Short bursts of 26 GHz microwave energy are emitted and subsequently reflected from the liquid level surface. Distance is first measured by the equation:

D = Transit time (round-trip)/2

Liquid level is then calculated based on transmitter configuration.

APPLICATIONS

MEDIA: Liquids and slurries; hydrocarbons to water-based media (dielectric 1.7–100, 1.4 in stillwell)

VESSELS: Most process or storage vessels up to rated temperature and pressure. Pits and sumps as well as glass-lined tanks.

CONDITIONS: Virtually all level measurement and control applications including process conditions exhibiting varying specific gravity and dielectric, visible vapors, high fill/empty rates, turbulence, low to moderate foam and buildup.

FEATURES

- Multivariable two-wire, 24 VDC loop-powered transmitter for level, volume, or flow
- Performance not process dependent (changing specific gravity and dielectric have no effect)
- 26 GHz operating frequency offers superior performance with better accuracy and enhanced resolution
- Antenna designs to +750 °F (+400 °C)-14.7 to 2320 psi (-1.0 to 160 bar)
- Range up to 130 feet (40 meters)
- Quick connect/disconnect antenna coupling allows vessel to remain sealed
- 4-button keypad and graphic LCD display allow for convenient viewing of configuration parameters and echo curve
- Proactive diagnostics advise not only what is wrong, but also offer troubleshooting tips
- Convenient Setup and Echo Rejection Wizards (Echo Rejection setup is simple, intuitive, and effective)
- SIL 2 suitable (93.2% SFF, with full FMEDA report available)
- PACT*ware*™ PC Program and enhanced DTMs for advanced configuration and troubleshooting
- Available with HART® or FOUNDATION fieldbus™ digital outputs

TECHNOLOGY

PULSE BURST RADAR

The Pulsar R86 is a top-mounted, downward-facing pulse burst radar operating at 26 GHz. Unlike true pulse devices (e.g., Eclipse Guided Wave Radar) which transmit a single, sharp (fast rise-time) waveform of wide-band energy (Figure 1), Pulsar emits short bursts of 26 GHz energy (Figure 2) and measures the transit time of the signal reflected off the liquid surface.

Distance is measured utilizing the equation:
Distance equals the Speed of light multiplied by the transit time divided by two (*Distance* = *C* × *Transit Time/2*). Level is then calculated by factoring in tank height and other configuration information (Figure 3). The reference point for distance and level calculations is the sensor reference point (bottom of an NPT thread, top of a BSP thread, or face of the flange).

The exact level measurement is extracted from false target reflections and other background noise via the use of sophisticated signal processing. The new Pulsar Model R86 circuitry is extremely energy efficient so no duty cycling is necessary to accomplish effective measurement.

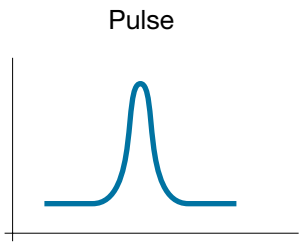

Figure 1

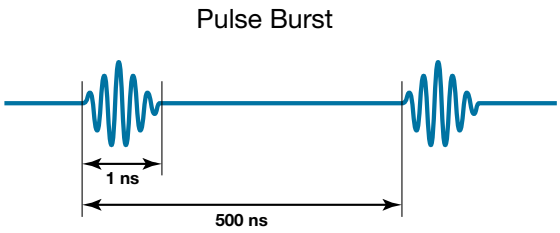

Figure 2

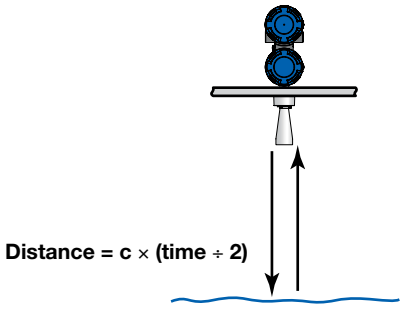

Figure 3

OPERATIONAL CONSIDERATIONS

Radar applications are characterized by three basic conditions:

- Dielectric (process medium)
- Distance (measuring range)
- Disturbances (turbulence, foam, false targets, multiple reflections)

The Pulsar R86 Radar transmitter is offered with several horn antenna sizes and configurations:

- 1½" (38 mm)
- 2" (50 mm)
- 3" (75 mm)
- 4" (100 mm)

Maximum measuring range (distance) is measured from the sensor reference point (bottom of NPT thread, gasket face of BSP thread, or gasket face of flange) to the bottom of the tank. Refer to Figure 4.

Since larger horns yield stronger signals and smaller beam angles, the 4" (100 mm) horn antenna should ideally be used to ensure the best possible performance in all operational conditions. However, as that is often impractical, other antenna sizes are available.

The chart (Figure 5) shows the maximum measuring range of each antenna based on dielectric and turbulence.

Obstructions, noise and media buildup can drastically decrease reliable measurement. Although it is theoretically possible to measure a liquid level on the antenna, liquid should not be allowed closer than:

For Metal Antennas:
Two inches (50 mm) from the bottom of the antenna or 12" (305 mm) from the sensor reference point (whichever is greater). Refer to Figure 6.

For Encapsulated Horn Antennas:
Two inches (50 mm) from the bottom of the antenna or 12" (305 mm) from the launch point (whichever is greater). Refer to Figure 6.

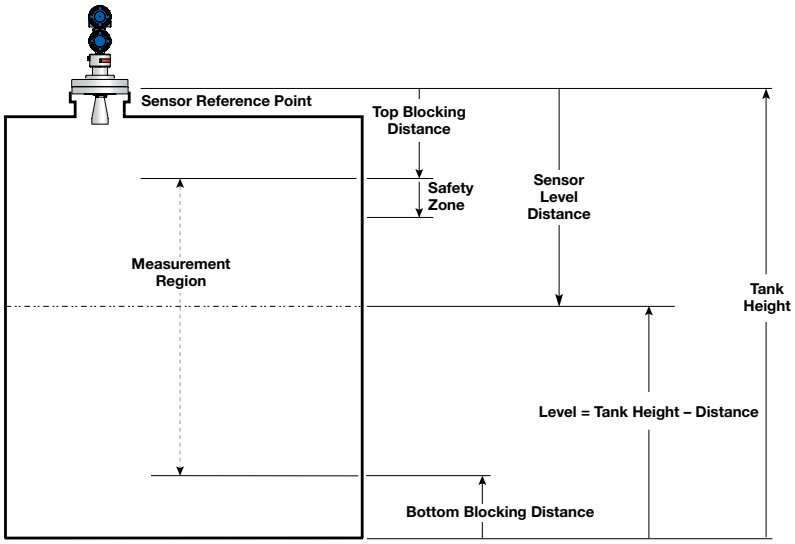

Figure 4

R86 Maximum Recommended Measuring Range in feet (meters)							
		Turbulence None or Light			Turbulence Medium or Heavy		
	Dielectric >	1.7 – 3	3 – 10	10 – 100	1.7 – 3	3 – 10	10 – 100
Antenna Type	1½" Horn	30 (9)	40 (12)	60 (18)	10 (3)	16 (5)	26 (8)
	2" Horn	33 (10)	49 (15)	66 (20)	10 (3)	20 (6)	33 (10)
	3" Horn	50 (15)	66 (20)	98 (30)	13 (4)	30 (9)	40 (12)
	4" Horn	66 (20)	98 (30)	130 (40)	23 (7)	40 (12)	50 (15)

Figure 5

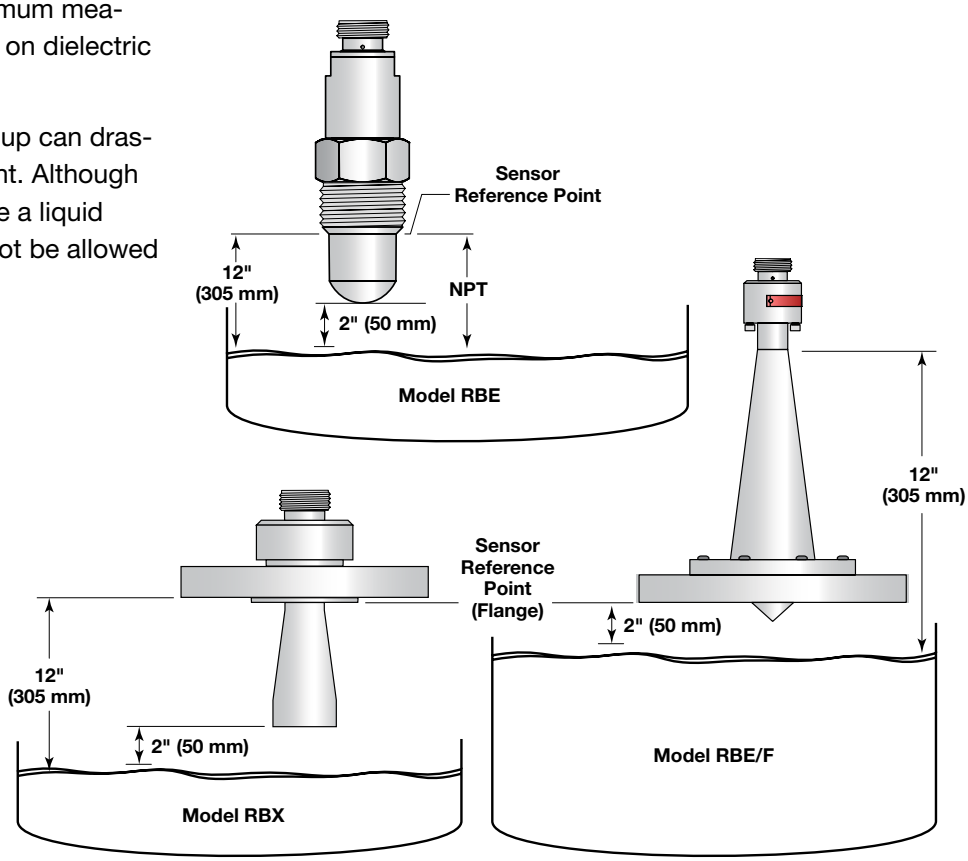

Figure 6

MOUNTING

The Pulsar Model R86 Radar transmitter can be mounted on a vessel using a variety of process connections. Generally either a threaded or flanged connection is used.

LOCATION

Ideally, the Radar transmitter should be mounted ½ radius from center of the tank providing an unobstructed signal path to the liquid surface where it can illuminate (with microwave energy) the largest possible surface area. A conservative recommendation is to not install in center of tank top or within 18 inches (45 cm) of tank wall. Tank walls may produce reflections that must be minimized during field configuration. Refer to Figure 7.

BEAM ANGLE

The various antenna sizes exhibit different beam patterns. Figure 9 shows the beam spread for all Pulsar Model R86 antennas. Ideally the beam pattern should illuminate the maximum liquid surface with minimum striking of other objects in the vessel including the tank wall. Use these drawings to determine the optimum installation location.

OBSTRUCTIONS

Almost any object that falls within the beam pattern will cause reflections that may be misinterpreted as a false liquid evel. Although the Pulsar Model R86 has a powerful Echo Rejection routine, all possible precautions should be taken to minimize false target reflections with proper installation location. Refer to Figures 8 & 9.

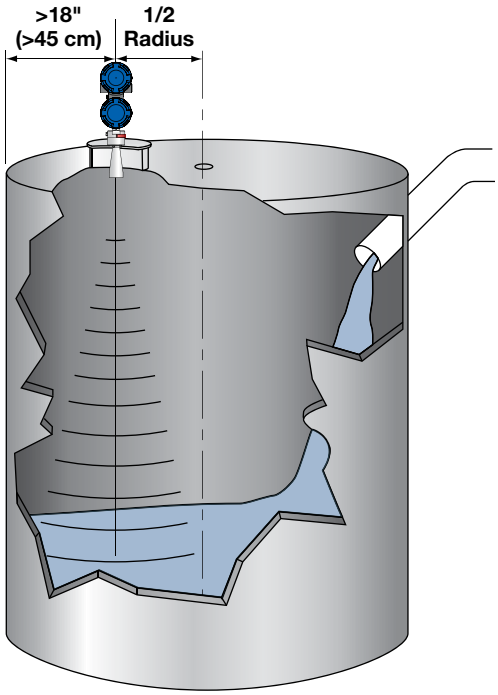

Figure 7

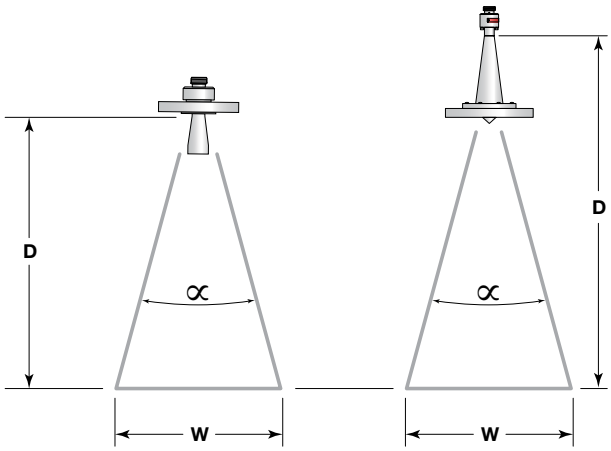

feet (meters)

	Beam Spread, W @-3dB; ft ()			
Antenna Beam Angle (∝)	1½" Horn 20°	2" Horn 18°	3" Horn 11°	4" Horn 9°
Distance, D				
10 (3)	3.5 (1.1)	3.2 (1.0)	1.9 (0.6)	1.6 (0.5)
20 (6)	7.1 (2.1)	6.3 (1.9)	3.9 (1.2)	3.1 (0.9)
30 (9)	10.6 (3.2)	9.5 (2.9)	5.8 (1.7)	4.7 (1.4)
40 (12)	14.1 (4.2)	12.7 (3.8)	7.7 (2.3)	6.3 (1.9)
50 (15)	17.6 (5.3)	15.8 (4.8)	9.6 (2.9)	7.9 (2.4)
60 (18)	21.2 (6.3)	19.0 (5.7)	11.6 (3.5)	9.4 (2.8)
65 (20)		20.6 (6.3)	12.5 (3.9)	10.2 (3.1)
98 (30)			18.9 (5.8)	15.4 (4.7)
130 (40)				20.5 (6.3)

Figure 9

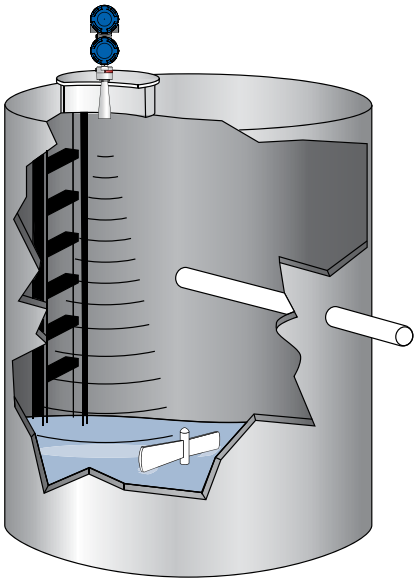

Figure 8

MOUNTING

NOZZLES

Improper installation in a nozzle creates “ringing” (undesired signals) which can adversely affect measurement. The antenna should always be mounted such that the active section of the antenna is a minimum of 0.5" (13 mm) below the nozzle. Be sure to include any nozzle dimension that may extend down inside the vessel. Refer to Figure 10. Antenna extensions are offered to allow the Pulsar Model R86 transmitter to work reliably in nozzles with an “L” dimension up to 72" (1.8 m).

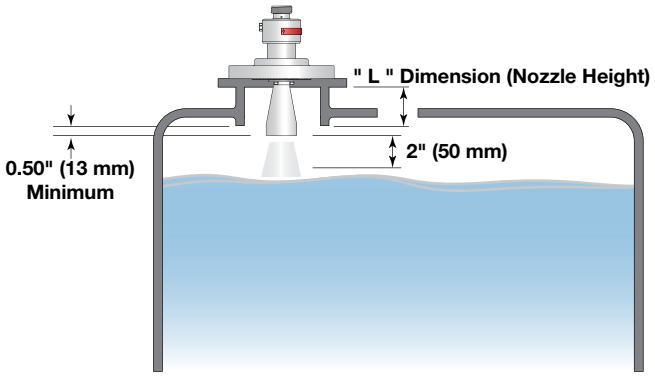

Figure 10

ORIENTATION

The Pulsar Model R86 transmitter utilizes circular polarization. This means that the microwave beam does not need to be manually adjusted (rotated) during commissioning as is necessary with other radar transmitters. The result is a much simpler start-up process.

TEMPERATURE EXTENSION

HEAT EXTENSION FOR USE WITH HIGH TEMPERATURE/HIGH PRESSURE ANTENNAS

To limit the temperature exposure to the transmitter in high temperature applications, a heat extension (032-6922-001) is required between the antenna and transmitter. Refer to “Operating Temperature Range” chart on page 6

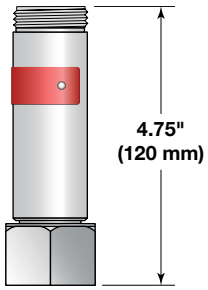

STANDPIPES AND STILLWELLS

The Pulsar Model R86 can be mounted in a standpipe or stillwell but certain items must be considered:

- Metal stillwells only:
  Inside diameter 1¾–8 inches (45–200 mm).
- Diameter must be consistent throughout length; no reducers or gaps.
- Use only horn antennas sized to pipe ID; 1½"–4" (38–101mm); 8-inch pipe can use 4-inch horn.
- Stillwell length must cover complete range of measurement (i.e., liquid must be in stillwell).
- Welds should be smooth.
- Vents: holes <0.125" (3 mm) diameter, slots <0.125" (3 mm) width.
- If an isolation valve is used, it must be a full port ball valve with an I.D. equal to the pipe diameter.
- Configuration must include a non-zero entry for PIPE ID parameter.

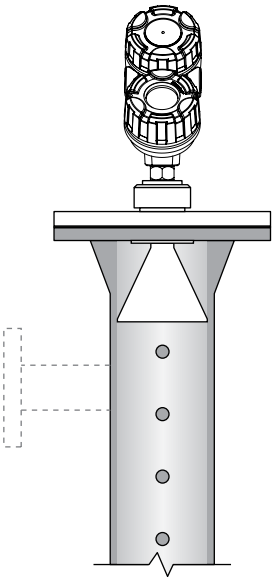

TEMPERATURE/PRESSURE

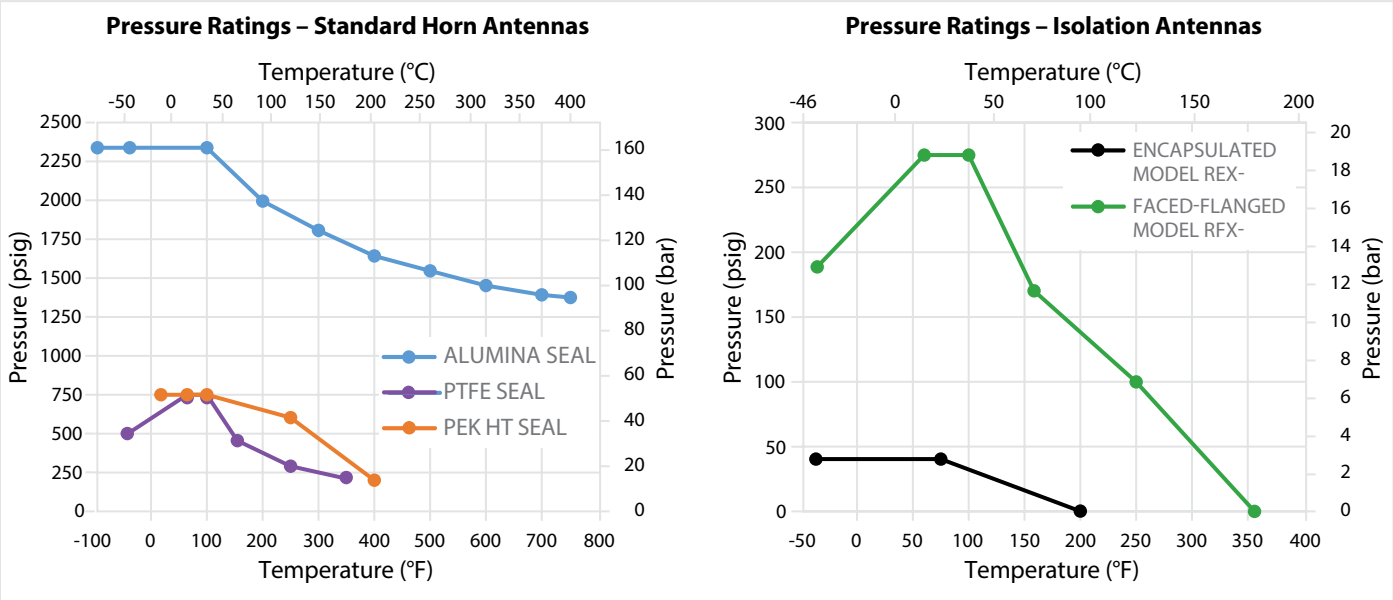

OPERATING TEMPERATURE RANGE

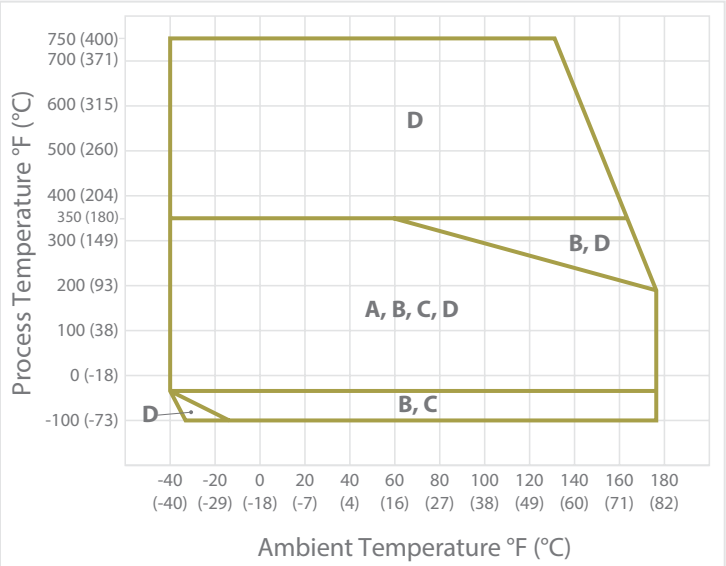

Safe Operating Regions

A: Standard Seal, PTFE

B: Standard Seal with Extension (P/N 032-6922-001)

C: HTHP Seal

D: HTHP Seal with Extension (P/N 032-6922-001)

Model R86 T-codes	No Temperature Extension			With Temperature Extension Part No. 032-6922-001		
	Max. Temp. of Process	Max. Ambient Temp.	T-code	Max. Temp. of Process	Max. Ambient Temp.	T-code
Standard Seal 10th digit = 0, 2, 8 or A	+70 °C	+70 °C	T4	+70 °C	+70 °C	T4
	+130 °C	+42 °C		+130 °C	+67 °C	
	—	—	—	+195 °C	+64 °C	T3
HTHP Seal 10th digit = N	+70 °C	+70 °C	T4	+70 °C	+70 °C	T4
	+130 °C	+42 °C		+130 °C	+67 °C	
	—	—	—	+180 °C	+64 °C	T3
	—	—	—	+295 °C	+60 °C	T2
	—	—	—	+400 °C	+55 °C	T1

APPLICATIONS

PULSE BURST RADAR

STORAGE AND INTERMEDIATE HOLDING TANKS

CONDITIONS – Calm Surfaces

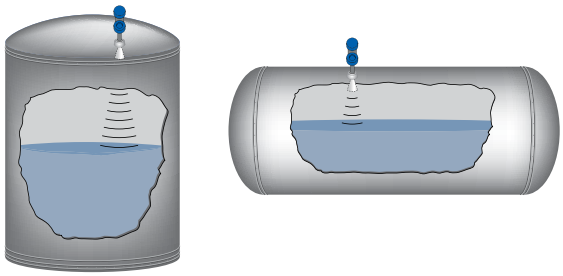

REACTORS

CONDITIONS – Turbulence and Foam

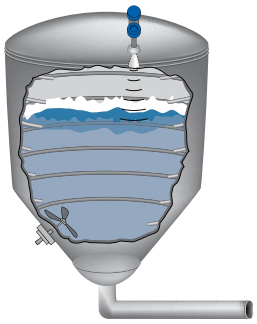

CHAMBERS AND BYPASS

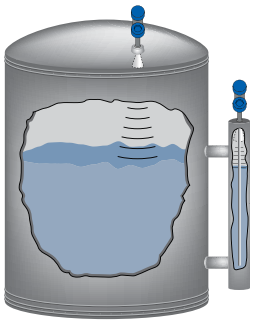

ENCLOSED SUMPS

CONDITIONS – Turbulence, Foam, and Changing Dielectric

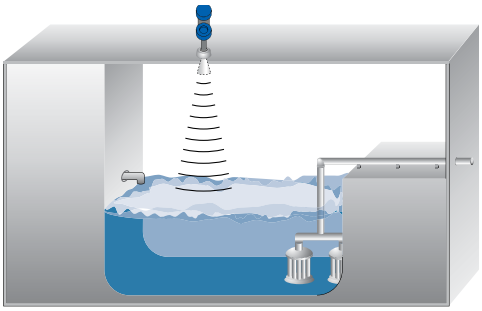

MIXING AND BLENDING VESSELS

CONDITIONS – Turbulence, Foam, and Changing Dielectric

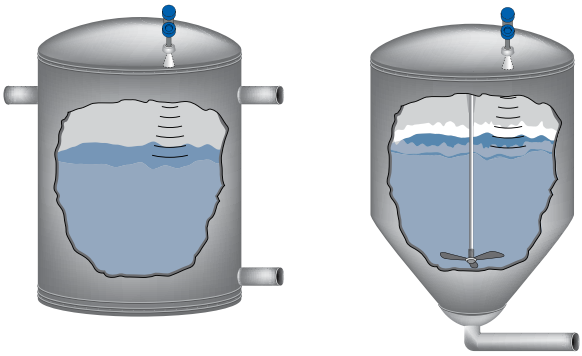

OPEN CHANNEL FLOW APPLICATIONS

Extensive Selection of Primary Flow Elements

With a total of 35 flume and weir curves stored in the electronics, it would be hard to find an open channel flow application that cannot be handled by the R86 transmitter. Unusual flow applications can readily be accomplished through the use of either the 20-point Custom Table or the Generic Discharge Flow Equation which allows a direct entry of unique flow equations.

Dual Flow Totalizers

Two 7-digit flow totalizers are provided for recording flow in cubic feet, gallons, million gallons, liters, million liters, or cubic meters. One totalizer is resettable and the other is non-resettable. Several multipliers are selectable to allow for proper scaling. Totalizer time is also recorded to show how long each totalizer has been recording flow.

ENCLOSED FLUMES AND WEIRS

CONDITIONS – Turbulence and Changing Dielectric

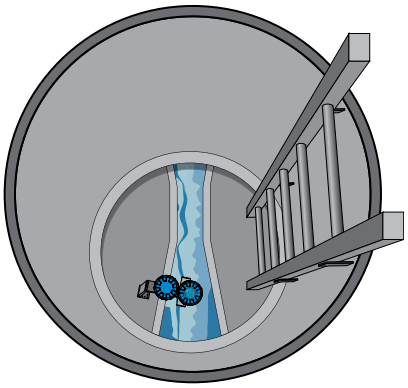

NOTE: For optimal accuracy, mount the transmitter a minimum of 30” (75 cm) above the flow element (this is dependent on type and size of the flow element). Consult factory for assistance on this dimension

PROBLEMATIC APPLICATIONS

GUIDED WAVE RADAR ALTERNATIVE

Some applications can be problematic for Non-Contact Radar. The following are examples of when Guided Wave Radar is recommended.

- Extremely low dielectric media (ε_r<1.7)
- Very weak reflections from the liquid surface (particularly during turbulence) can cause poor performance.
- Tanks heavily cluttered with false targets (mixers, pumps, ladders, pipes, etc.)
- During times of very low liquid levels of low dielectric media, the metal tank bottom may be detected, which can deteriorate performance.
- Foam can either absorb or reflect the microwave energy depending upon the depth, dielectric, density and wall thickness of the bubbles. Due to typical variations in the amount (depth) of foam, it is impossible to quantify performance. It may be possible to receive most, some or none of the transmitted energy.
- Extremely high liquid level (Overflow) conditions when liquid very near the antenna can cause erroneous readings and measurement failure.
- Interface applications

Refer to Eclipse Model 706 Guided Wave Radar bulletin 57-106.

O-RING (SEAL) SELECTION CHART

Material	Code	Maximum Temperature	Maximum Pressure	Min. Temp.	Recommended For Use In	Not Recommended For Use In
Viton® VX065	0	+356 °F @ 232 psi (+180 °C @ 16 bar)	750 psi @ +70 °F (51.7 bar @ +20 °C)	-40 °F (-40 °C)	General purpose, ethylene	Ketones (MEK, acetone), skydrol fluids, amines, anhydrous ammonia, low molecular weight esters and ethers, hot hydrofluoric or chlorosulfuric acids, sour HCs
Kalrez® 4079	2	+400 °F @ 232 psi +(200 °C @ 16 bar)	750 psi @ +70 °F (51.7 bar @ +20 °C)	-40 °F (-40 °C)	Inorganic and organic acids (including HF and nitric), aldehydes, ethylene, glycols, organic oils, silicone oils, vinegar, sour HCs	Black liquor, hot water/steam, hot aliphatic amines, ethylene oxide, propylene oxide, molten sodium, molten potassium
Simriz SZ485 (formerly Aegis PF128)	8	+400 °F @ 232 psi +(200 °C @ 16 bar)	750 psi @ +70 °F (51.7 bar @ +20 °C)	20 °F (-7 °C)	Inorganic and organic acids (including HF and nitric), aldehydes, ethylene, glycols, organic oils, silicone oils, vinegar, sour HCs, steam, amines, ethylene oxide, propylene oxide, NACE applications	Black liquor, Freon 43, Freon 75, Galden, KEL-F liquid, molten sodium, molten potassium
Kalrez® 6375	A	400 °F @ 232 psi (200 °C @ 16 bar)	750 psi 70 °F (51.7 bar @ 20 °C)	-40 °F (-40 °C)	Inorganic and organic acids (including hydro fluids and nitric), aldehydes, ethylene, organic oils, glycols, silicone oils, vinegar,	Hot water/steam, hot aliphatic amines, ethylene oxide, propylene oxide
Alumina	N	+750 °F @ 1375 psi (+400 °C @ 94.8 bar)	2320 psi @ 70 °F (160 bar @ +20 °C)	-100 °F (-70 °C)	General high temperature/high pressure applications, hydrocarbons, full vacuum (hermetic), ammonia, chlorine	Hot alkaline solutions HF acid, media with ph>12, direct exposure to saturated steam

① +350 °F (+180 °C) for options with hazardous locations approval.

② Maximum +300 °F (+150 °C) for use on steam.

AGENCY APPROVALS

These devices are in compliance with the RED-directive 2014/53/EU, the EMC directive 2014/30/EU, the PED-directive 2014/68/EU, the ATEX directive 2014/34/EU and RoHS directive 2011/65/EU.

Explosion Proof **US/Canada:** FM17US0108X / FM17CA0055X Class I, Div 1, Group B, C, D, T4…T1 Class I, Zone 0/1 AEx/Ex ia/db IIB i + H2 T4…T1 Ga/Gb Class I, Zone 1 AEx/Ex db ia IIB + H2 T4…T3 Gb Ta = -40 ºC to +70 ºC Type 4X, IP67 **Flame Proof** **ATEX – FM17ATEX0027X/FM22UKEX0128X** II 1/2 G Ex ia/db IIB + H2 T4…T1 Ga/Gb, Ta = -40 ºC to +70 ºC II 1/2 G Ex ia/db IIB + H2 T4…T2 Ga/Gb Ta = -7°C to +70°C FISCO II 2 G Ex db ia IIB + H2 T4…T3 Gb IP67 **IEC- IECEx FMG 17.0012X** Ex ia/db IIB + H2 T4…T1 Ga/Gb Ex db ia IIB + H2 T4…T3 Gb Ta = -40 ºC to +70 ºC	**Non- Incendive** **US/Canada:** FM17US0108X / FM17CA0055X Class I, II, III, Div 2, Group A, B, C, D, E, F, G, T4…T1 Class 1, Zone 2 AEx ec IIC T4…T1 Gc Class 1, Zone 2 Ex ec IIC T4…T1 Gc Ta = -15 ºC to +70 ºC Type 4X, IP67 **ATEX - FM17ATEX0028X** II 3 G Ex ec IIC Gc T4…T1 Gc II 3 G Ex ic IIC T4...T1 Gc Ta = -15 ºC to +70 ºC IP67 **IEC – IECEx FMG 17.0012X** Ex ec IIC Gc T4…T1 Gc Ta = -15 ºC to + 70 ºC IP67
Intrinsically Safe **US/Canada:** FM17US0108X / FM17CA0055X Class I, II, III, Div 1, Group A, B, C, D, E, F, G, T4…T1 Class I, Zone 0 AEx ia IIC T4…T1 Ga Class I, Zone 0 Ex ia IIC T4…T1 Ga CL I Zone 2 AEx ic IIC T4...T1 Gc CL I Zone 2 Ex ic IIC T4...T1 Gc Ta =-40 ºC to +70 ºC Type 4X, IP67 **ATEX – FM17ATEX0027X/FM22UKEX0128X:** II 1 G Ex ia IIC T4…T1 Ga II 1 G Ex ia IIC T4…T2 Ga FISCO II 1 G Ex ia IIC T4…T3 Ga FISCO Ta = -40 ºC to +70 ºC IP67 **IEC – IECEx FMG 17.0012X:** Ex ia IIC T4…T1 Ga Ex ic IIC T4...T1 Gc Ta = -40 ºC to +70 ºC IP67	**Dust Ignition Proof** **US/Canada:** FM17US0108X / FM17CA0055X Class II, III, Div 1, Group E, F, and G, T4…T1 Ta = -15º C to +70º C Type 4X, IP67 **ATEX – FM17ATEX0027X/FM22UKEX0128X:** II 2 D Ex ia tb IIIC T100º C Db Ta = -15º C to +70º C IP67 **IEC – IECEx FMG 17.0012X:** Ex ia tb IIIC T100º C Db Ta = -15º C to +70º C IP67

FM3600:2011, FM3610:2010, FM3611:2004, FM3615:2006, FM3616:2011, FM3810:2005, ANSI/ISA60079-0:2013, ANSI/ISA 60079-1:2015, ANSI/ISA 60079-11:2013, ANSI/ISA 60079-15:2012, ANSI/ISA 60079-26:2011, NEMA 250:2003, ANSI/IEC 60529:2004, C22.2 No. 0.4:2009, C22.2 No. 0.5:2008, C22.2 No. 30:2007, C22.2 No. 94:2001, C22.2 No. 213:2012, C22.2 No. 1010.1:2009, CAN/CSA 60079-0:2011, CAN/CSA 60079-1:2011, CAN/CSA 60079-11:2014, CAN/CSA 60079-15:2012, C22.2 No. 60529:2005, EN60079-0:2012, EN60079-1:2014, EN60079-11:2012, EN60079-15:2010, EN60079-26:2007, EN60079-31:2009, EN60529+A1:1991-2000, IEC60079-0:2011, IEC60079-1:2014, IEC60079-11:2011, IEC60079-15:2010, IEC60079-26:2006, IEC60079-31:2008

"This equipment with chargeable non-conductive parts, e.g. enclosure's paint and antenna use PTFE, Co-polymer Polypropylene or Noryl En265, is provided with a warning label referring to the safety measures that must be taken if there is electrostatic charging during operation. For use in hazardous area, the equipment and side to be installed, e.g. tank, must be connected to earth and be attention to not only the measuring object, e.g., liquids, gases, powders and etc., but also the related conditions, e.g. tank container, vessel and etc. (According to IEC 60079- 32-1)."

FCC (ID# LPN-R86) Compliance Statement

This equipment has been tested and found to comply with the limits for a Class B digital device, pursuant to part 15 of the FCC Rules. These limits are designed to provide reasonable protection against harmful interference in a residential installation. This equipment generates, uses and can radiate radio frequency energy and, if not installed and used in accordance with the instructions, may cause harmful interference to radio communications.

Telecommunications Approvals

Agency	In-Tank	Out of Tank
FCC	47 CFR, Part 15, Subpart C, Section 15.209 Unintentional Radiators	47 CFR, Part 15, Subpart C, Section 15.256
ISED	RSS-211	RSS-211
ETSI	EN 302 372 V2.1.1 (2016-12)	EN 302 729 V2.1.1 (2016-12)

TRANSMITTER SPECIFICATIONS

FUNCTIONAL/PHYSICAL

System Design		
Measurement Principle		Pulse Burst Radar 26 GHz
Input		
Measured Variable		Level, determined by the time-of-flight of radar pulse reflections
Span		0.5 to 130 feet (0.2 to 40 meters)
Output		
Type		4 to 20 mA with HART: 3.8 mA to 20.5 mA useable (per NAMUR NE43)
		FOUNDATION fieldbus™: H1 (ITK Ver. 6.2.0)
Resolution	Analog: Digital Display:	.003 mA 1 mm
Loop Resistance	GP/IS: XP/Flameproof:	591 ohms @ 24 VDC and 22 mA 500 ohms @ 24 VDC and 22 mA
Diagnostic Alarm		Selectable: 3.6 mA, 22 mA (meets requirements of *NAMUR NE*43), or HOLD last output
Diagnostic Indication		Meets requirements of Namur NE107
Damping		Adjustable 0-10
User Interface		
Keypad		4-button menu-driven data entry
Display		Graphic Liquid Crystal Display
Digital Communication		HART Version 7–with Field Communicator, FOUNDATION fieldbus™, AMS, or FDT
		DTM (PACT*ware*™), EDDL
Menu Languages	Transmitter LCD: HART DD:	English, French, German, Spanish, Russian, Portuguese, Polish English, French, German, Spanish, Russian, Chinese, Portuguese, Polish
Host System	Foundation fieldbus: PROFIBUS PA:	English English
Voltage (Measured at instrument terminals)		HART: General Purpose (Weather proof)/Intrinsically Safe/Explosion-proof:
		11 VDC minimum at terminals under certain conditions (refer to Manual 58-603)
		Foundation fieldbus™ and PROFIBUS PA: 9 to 17.5 VDC
		FISCO, FNICO, General Purpose (Weatherproof)
Housing		
Material		IP67/die-cast aluminum A413 (<0.4% copper); optional stainless steel
Net/Gross Weight	Aluminum: Stainless Steel:	4.5 lbs. (2.0 kg) 10.0 lbs. (4.50 kg)
Overall Dimensions		Refer to page 12
Cable Entry		½" NPT or M20
SIL 2 Hardware (Safety Integrity Level)		Safe Failure Fraction = 93.2% (HART only) Functional Safety to SIL 2 as 1oo1 in accordance with IEC 61508 (Full FMEDA report available upon request)

ENVIRONMENTAL

Ambient Operating Temperature	-40 to +175 °F (-40 to +80 °C); LCD viewable -5 to +160 °F (-20 to +70 °C)
Storage Temperature	-50 to +185 °F (-45 to +85 °C)
Humidity	0–99%, non-condensing
Electromagnetic Compatibility	Meets CE requirement (EN 61326) and NAMUR NE 21
Surge Protection	Meets CE EN 61326 (1000V)
Shock/Vibration	ANSI/ISA-S71.03 Class SA1 (Shock); ANSI/ISA-S71.03 Class VC2 (Vibration)

PERFORMANCE

Reference Conditions		Reflection from ideal reflector at +70 °F (+20 °C)
Linearity		±0.1 inch (3 mm) or 0.1% of tank height (whichever is greater)
Measured Error		±0.1 inch (3 mm) or 0.1% of tank height (whichever is greater) (Performance will degrade slightly within 60" (1.5 m) of antenna)
Resolution		0.1 inch or 1mm
Repeatability		±0.1 inch (3 mm) or 0.05% of tank height (whichever is greater)
Response Time		<2 seconds (configuration dependent)
Initialization Time		< 30 seconds (configuration dependent)
Ambient Temperature Effect	Digital	Average 0.12 inch (3 mm) / 10 K, max of ±0.4 inch (10 mm) over the entire temperature range -40 to +175 °F (-40 to +80 °C)
	Analog	Current Output (additional error with reference to 16 mA span) Average 0.03% / 10 K. max 0.45% over entire temperature range -40 to +175 °F (-40 to +80 °C)
Maximum Rate of Change		180 inches (450 cm)/minute
User Interface		
	ITK Version	6.2.0
	H1 Device Class	Link Master (LAS)—selectable ON/OFF
	H1 Profile Class	31PS, 32L
	Function Blocks	(8) AI, (3) Transducer, (1) Resource, (2) PID (1) Arithmetic, (1) Signal Characterizer, (1) Input Selector, (1) Integrator
	Quiescent Current	17 mA
	Execution Time	10 ms (15 ms PID Block)
	Device Revision	01
	DD Version	0x01
PROFIBUS PA		
Device Revision		0x101A
Digital Communication Protocol		Version 3.02 MBP (31.25 kbits/sec)
Function Blocks		(1) × Physical Block, (8) × AI Blocks, (3) × Transducer Block
Quiescent Current		15 mA
Execution Time		15 ms

ANTENNA SPECIFICATIONS

FUNCTIONAL/PHYSICAL

Antenna Material	316 SS, Hastelloy C, Polypropylene or PTFE
Process Seal Material	PEEK, PTFE with O-rings or Alumina
Maximum Process Temperature	+750 °F @ 1375 psi (+400 °C @ 94.8 bar)
Maximum Process Pressure	-14.7 to 2320 psi @ +70 °F (-1.0 to 160 bar @ +20 °C)
Vacuum Service	Hermeticity to <5 × 10-7 cc/sec helium
Minimum Dielectric (application dependent)	1.7 (1.4 with stillwells)

DIMENSIONAL SPECIFICATIONS

INCHES (MM)

Transmitter

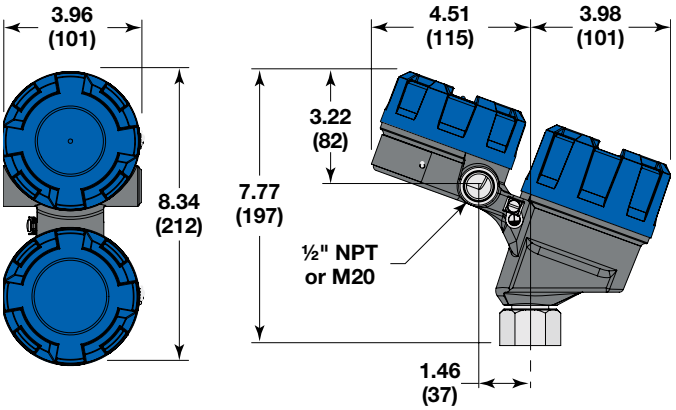

POLYPROPYLENE AND PTFE FACED-FLANGE ANTENNA

	Model Number	Process Connection	Horn Size		
	3rd Digit		1½"	2"	3"
Dim. A	E Encapsulated Polypropylene Horn	1½" NPT	4.79 (122)	—	—
		2" 150#	—	3.94 (100)	—
		3" 150#	—	—	10.56 (268)
		4" 150#	—	—	11.39 (289)
		6" 150#	—	—	11.45 (291)
Dim. A	F Faced Flange PTFE Horn	2" 150#	—	3.94 (100)	—
		3" 150#	—	—	4.69 (119)

HORN ANTENNA

	Model Number	3rd Digit (Horn Size)			
	11th Digit (Extension)	**1** (1½")	**2** (2")	**3** (3")	**4** (4")
Dim. H	**0** (None)	3.2 (81)	4.5 (114)	8.5 (216)	11.5 (292)
Dim. L	**1** (4")	6 (152)	—	—	—
	2 (8")	8 (203)	8.3 (211)	—	—
	3 (12")	12 (305)	12 (305)	12.4 (315)	14.4 (366)
	4 (24")	24 (610)	24 (610)	24 (610)	24 (610)
	5 (48")	48 (1219)	48 (1219)	48 (1219)	48 (1219)
	6 (72")	72 (1829)	72 (1829)	72 (1829)	72 (1829)
Dim. D		1.56 (40)	1.89 (48)	2.95 (75)	3.74 (95)

NPT Connection

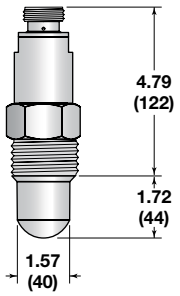

Model RBE

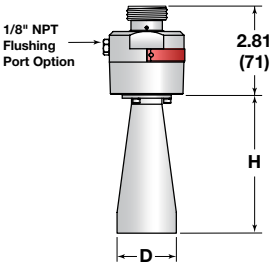

Model RBX

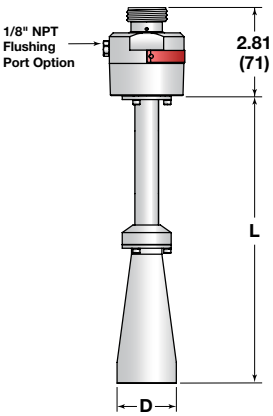

Model RBX

BSP Connection

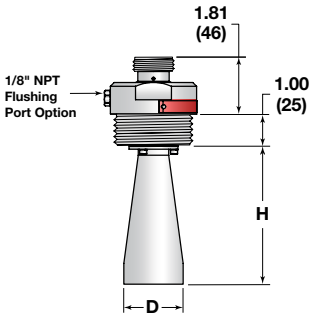

Model RBX

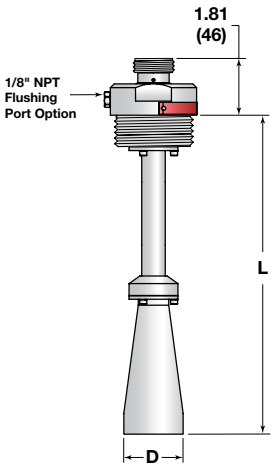

Model RBX

Flange Connection

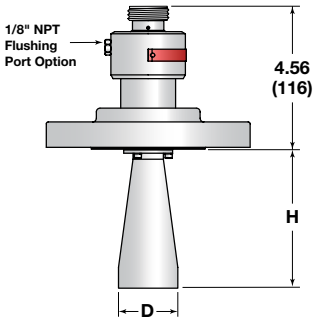

Model RBX

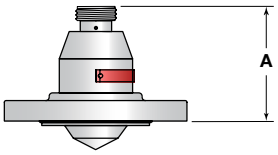

Model RBE/RBF

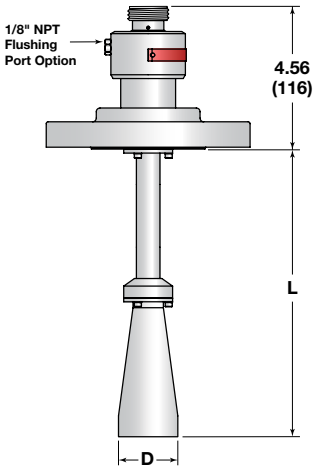

Model RBX

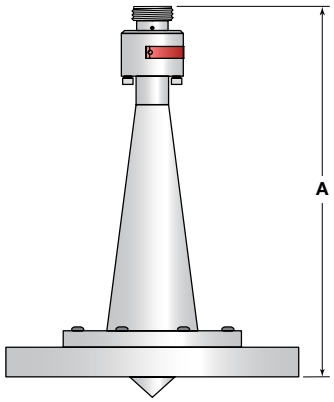

Model RBE

TRANSMITTER MODEL NUMBER

1–3 | MEASUREMENT SYSTEM

R 8 6	Through-Air Radar Level Transmitter - 26 GHz Pulse Burst Radar

4 | POWER

5	24 VDC, Two Wire

5 | SIGNAL OUTPUT

1	4-20 mA with HART
2	FOUNDATION fieldbus™ H1 (NOT available when 8th digit = 3 or B)
3	PROFIBUS PA (NOT available when 8th digit = 3 or B)

6 | SAFETY OPTIONS

0	None (FOUNDATION fieldbus and PROFIBUS only, 5th digit = 2 or 3)
1	SIL 2 Hardware - HART only (5th digit = 1)
A	None (FOUNDATION fieldbus and PROFIBUS only, 5th digit = 2 or 3) – ETSI ①
B	SIL 2 Hardware - HART only (5th digit = 1) – ETSI ①

① Must be used with 3-inch or 4-inch horn

7 | ACCESSORIES/MOUNTING

0	No Digital Display and Keypad - Integral
A	Digital Display and Keypad - Integral

8 | CLASSIFICATION

0	General Purpose, Weatherproof (IP 67)
1	Intrinsically Safe or Non-incendive (FM & CSA)
3	Explosion-proof (FM & CSA)
A	Intrinsically Safe (ATEX/IEC)
B	Flame-proof (ATEX/IEC) Zone 0 requires Antenna 10th digit = 0, 8 or N
C	Non-sparking (ATEX)
D	Dust Ignition-proof

9 | HOUSING

1	Die-cast Aluminum, Dual Compartment, 20-degree
2	Investment Cast, 316ss, Dual Compartment, 20-degree

10 | CONDUIT CONNECTION

0	½" NPT
1	M20
2	½" NPT with sunshade
3	M20 with sunshade

R	8	6	–	5				–			
1	2	3		4	5	6	7		8	9	10

ANTENNA MODEL NUMBER

1–2 | TECHNOLOGY

R B	Pulsar Radar Antennas - 26 GHz

3 | CONFIGURATION/STYLE

1	1½" Horn
2	2" Horn
3	3" Horn (not available when 4th digit = 3, 4, or D, or when 11th digit = 0)
4	4" Horn (not available when 4th digit = 3, 4, or D, or when 11th digit = 0)
E	Encapsulated – Polypropylene (available only when 4th and 5th digits = 31, 43, 53, 63, 73, DA, EA, FA, GA)
F	Faced Flange – PTFE Coated Wetted Surfaces (available only when 4th and 5th digits = 43, 53, DA, EA)
H	Hygienic (future)

4–5 | PROCESS CONNECTION – SIZE/TYPE

31	1½" NPT thread	**41**	2" NPT Thread
32	1½" BSP (G 1½") thread	**42**	2" BSP (G 2") Thread

ASME Flanges		EN (DIN) Flanges		
43	2" 150# ASME raised face flange	**D A**	DN 50, PN 16	EN 1092-1 Type A
44	2" 300# ASME raised face flange	**D B**	DN 50, PN 25/40	EN 1092-1 Type A
45	2" 600# ASME raised face flange	**D D**	DN 50, PN 63	EN 1092-1 Type B2
53	3" 150# ASME raised face flange	**E A**	DN 80, PN 16	EN 1092-1 Type A
54	3" 300# ASME raised face flange	**E B**	DN 80, PN 25/40	EN 1092-1 Type A
55	3" 600# ASME raised face flange	**E D**	DN 80, PN 63	EN 1092-1 Type B2
63	4" 150# ASME raised face flange	**F A**	DN 100, PN 16	EN 1092-1 Type A
64	4" 300# ASME rased face flange	**F B**	DN 100, PN 25/40	EN 1092-1 Type A
65	4" 600# ASME raised face flange	**F D**	DN 100, PN 63	EN 1092-1 Type B2
73	6" 150# ASME raised face flange	**G A**	DN 150, PN 16	EN 1092-1 Type A
74	6" 300# ASME raised face flange	**G B**	DN 150, PN 25/40	EN 1092-1 Type A
75	6" 600# ASME raised face flange	**G D**	DN 150, PN 63	EN 1092-1 Type B2

3" RBE are Raised Face Lap Joint Flange

6 | CONSTRUCTION CODES

0	Industrial
K	ASME B31.1
L	ASME B31.3
M	ASME B31.3 & NACE MR0175 / MR0103
N	NACE MR0175 / MR0103

7 | FLANGE OPTIONS

0	None

R	B		–				0	–		0		–			–	0	0	0
1	2	3		4	5	6	7		8	9	10		11	12		13	14	15

ANTENNA MODEL NUMBER

8 | MATERIAL OF CONSTRUCTION - MFG/NUT/ROD/INSULATION

A	316SS/316L SS
B	Hastelloy C
R	316SS/316L SS with Carbon Steel Flange
S	Hastelloy C with Carbon Steel Flange

9 | FUTURE

0	None

10 | O-RING MATERIALS/SEAL OPTIONS ①

0	Viton VX065
2	Kalrez 4079 (not suitable for ATEX/IEC flameproof Zone 0)
8	Simriz SZ485 (formerly Aegis PF128) — NACE
A	Kalrez 6375 (not suitable for ATEX/IEC flameproof Zone 0)
N	None - Alumina seal

① Refer to pages 5 and 6 for temperature extension information

11 | ANTENNA EXTENSIONS – refer to page 12 ②

0	None
1	For nozzle height ≤ 4" (100 mm) (available only when 3rd Digit = 1)
2	For nozzle height ≤ 8" (200 mm) (not available when 3rd Digit = 3 or 4)
3	For nozzle height ≤ 12" (300 mm)
4	For nozzle height ≤ 24" (600 mm)
5	For nozzle height ≤ 48" (1200 mm)
6	For nozzle height ≤ 72" (1800 mm)

② Not available for RBE and RBF antenna

12 | SPECIAL OPTIONS

0	None
1	⅛" NPT Flushing Connection

R	B		–					–		0		–			–	0	0	0
1	2	3		4	5	6	7		8	9	10		11	12		13	14	15

QUALITY

The quality assurance system in place at AMETEK LMS guarantees the highest level of quality throughout the company. AMETEK LMS is committed to providing full customer satisfaction both in quality products and quality service.

The AMETEK LMS quality assurance system is certified to ISO 9001, affirming our commitment to internationally recognized quality management standards and continuous improvement.

WARRANTY

All AMETEK LMS electronic level and flow controls are warranted free of defects in materials or workmanship for eighteen months from the date of original factory shipment.

If returned within the warranty period; and, upon factory inspection of the control, the cause of the claim is determined to be covered under the warranty; then, AMETEK LMS will repair or replace the control at no cost to the purchaser (or owner) other than transportation.

AMETEK LMS shall not be liable for misapplication, labor claims, direct or consequential damage or expense arising from the installation or use of equipment. There are no other warranties expressed or implied, except special written warranties covering some AMETEK LMS products.

For additional information, see Instruction Manual 58-604.

Pulsar Radar transmitters may be protected by one or more of the following U.S. Patent Nos.:
US 6,062,095; US 6,980,174; US 7,102,584; US 7,106,248

MAGNETROL® / AMETEK® LEVEL MEASUREMENT SOLUTIONS

ametek-measurement.com

705 Enterprise Street • Aurora, Illinois 60504-8149 USA
630.969.4000 • info.magnetrol@ametek.com

Copyright © 2025 AMETEK Magnetrol USA, LLC
Performance specifications are effective with date of issue and are subject to change without notice.

BULLETIN: 58-103.6
EFFECTIVE: October 2023
SUPERCEDES: October 2020