MAGNETROL® / AMETEK®

LEVEL MEASUREMENT SOLUTIONS

Pulsar® Model R80
80 GHz FMCW Radar Level Transmitter

DESCRIPTION

The Pulsar® Model R80 radar transmitter is the latest generation of Magnetrol® 24 VDC, loop-powered, non-contact radar transmitters. Utilizing Frequency Modulated Continuous Wave (FMCW) radar technology, this transmitter offers enhanced performance, proactive diagnostics, and various configuration wizards to bring simplicity to an often complex technology.

This latest entry into the radar level measurement field is designed to provide unparalleled performance and ease of use. The 80 GHz Pulsar Model R80 is the perfect complement to our 6 GHz Pulsar Model R96 and 26 GHz Model R86 radar transmitters. Together, this transmitter family, along with the acclaimed Model 706 GWR transmitter, offers the ultimate solution set for those difficult industrial process level applications.

TECHNOLOGY

The Pulsar Model R80 radar transmitter is based on FMCW radar technology. Transmitting a continuous signal with a constantly changing frequency down toward the process medium, the difference in the frequencies detected between the transmitted signal and return echoes is a function of the distance.

Level is then calculated based on transmitter configuration.

APPLICATIONS

MEDIA: Liquids, slurries and solids; dry bulk solids to water- based media (dielectric 1.4–100)

VESSELS: Most process or storage vessels up to rated temperature and pressure. Silos, pits, and sumps as well as glass-lined tanks.

CONDITIONS: Virtually all level measurement and control applications including those exhibiting varying dielectric, visible vapors, high fill/empty rates, turbulence, low to moderate foam and buildup.

FEATURES

- Multivariable two-wire, 24 VDC loop-powered transmitter for level, volume, or flow
- Performance not process dependent (changing specific gravity and dielectric have no effect)
- 80 GHz operating frequency offers superior performance, smaller antennas, better accuracy and enhanced resolution
- Antenna designs up to +200 °C (+400 °F), -1 to 70 bar (-14.5 to 1000 psi)
- Available with hygienic (15 Ra) surface finish and Tri-Clamp process connections
- 4-button keypad and graphic LCD display allow for convenient viewing of configuration parameters and echo curve
- Proactive diagnostics advise not only what is wrong, but also offer troubleshooting tips
- SIL 2 suitable (92.3% SFF, with full FMEDA report available)
- PACTware™ PC program and enhanced DTMs for advanced configuration and troubleshooting
- Available with HART® digital output

TECHNOLOGY

FREQUENCY MODULATED CONTINUOUS WAVE (FMCW) RADAR

The Pulsar R80 is a top-mounted, downward-facing FMCW radar transmitter operating at 80 GHz. Unlike previous Pulsar transmitters that emit short bursts of 6 or 26 GHz energy and measure the transit time of the signal reflected off the product surface, FMCW devices transmit a continuous signal with a constantly changing frequency down toward the product surface.

The detected difference in frequencies between the transmitted signal and return echo is a function of the distance. See Figure 1 at right. Level is then calculated by factoring in tank height and other configuration information.

FMCW captures its process variable information in the frequency domain, which supports more accurate signal conversion. The main advantage of FMCW is that it utilizes higher receiving sensitivity and higher-strength signals over pulse systems, allowing it to perform better in difficult situations where there may be turbulence, foam, dust, or excessive vapors.

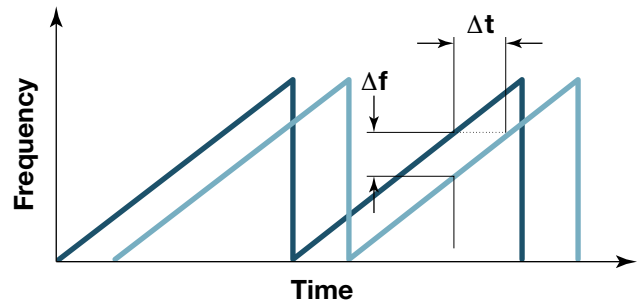

Figure 1

OPERATIONAL CONSIDERATIONS

All radar applications, regardless of the operating frequency, are characterized by three basic conditions:

- Dielectric (process medium)
- Distance (measuring range)
- Disturbances (factors such as turbulence, foam, false targets, multiple reflections, etc.)

The Pulsar Model R80 Radar transmitter is offered with several horn antenna sizes and configurations:

- ¾" NPT (G 3/4), 1½" NPT (G 1 1/2)
- 2" (DN 50), 3" (DN 80), 4" (DN 100)
- 2" Tri-Clamp, 3" Tri-Clamp

Since larger horns yield stronger signals and smaller beam angles, the 3” horn antenna should ideally be used to ensure the best possible performance in all operational conditions. However, as that is often impractical, other antenna sizes are available.

Maximum measuring range (distance) is measured from the sensor reference point (bottom of NPT thread, gasket face of BSP thread, or gasket face of flange) to the bottom of the tank. Refer to Figure 2.

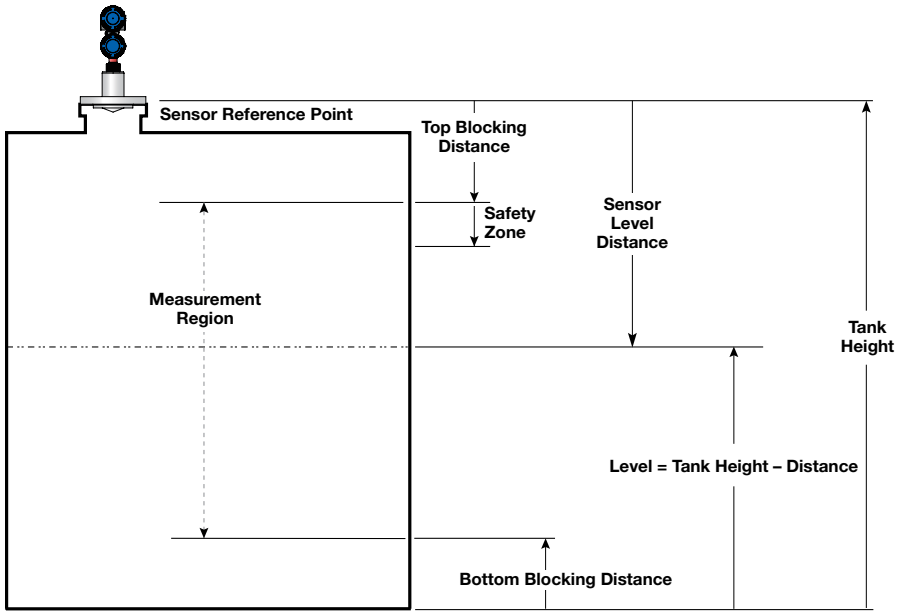

Figure 2

Figure 3 shows the maximum measuring range of each antenna size based on the dielectric and turbulence of the application. (Obstructions, noise and media buildup can affect reliable measurement.)

R80 Maximum Recommended Measuring Range in meters (feet)							
		Turbulence None or Light			Turbulence Medium or Heavy		
	Dielectric >	1.4 – 3	3 – 10	10 – 100	1.4 – 3	3 – 10	10 – 100
Antenna Type	¾" Horn	4 (13)	15 (49)	25 (82)	2 (7)	7 (23)	12 (39)
	1½" Horn	7 (23)	18 (59)	28 (92)	3 (10)	8 (26)	13 (43)
	2" Horn	8 (26)	19 (62)	29 (95)	4 (13)	9 (30)	14 (46)
	3" Horn	9 (29)	20 (65)	30 (98)	5 (17)	10 (33)	15 (49)

Figure 3

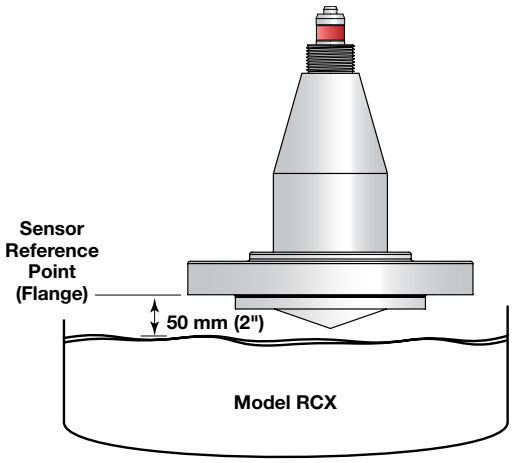

Figure 4

Although it is theoretically possible to measure a liquid level on the antenna, liquid should not be allowed closer than 50 mm (2 inches) from the bottom of the antenna.

MOUNTING

The Pulsar Model R80 Radar transmitter can be mounted on a vessel using a variety of process connections. Generally either a threaded or flanged connection is used.

LOCATION

Ideally, the Model R80 transmitter should be mounted ½ radius from center of the tank providing an unobstructed signal path to the product surface where it can illuminate (with microwave energy) the largest possible surface area. Conservative recommendations are to not install in center of tank top or within 30 cm (12 inches) of tank wall. Tank walls may produce reflections that can be minimized during field configuration. Refer to Figure 5.

BEAM ANGLE

The various antenna sizes exhibit different beam patterns. Figure 7 shows the beam spread for all Pulsar Model R80 antennas. Ideally the beam pattern should illuminate the maximum product surface with minimum striking of other objects in the vessel including the tank wall. Use these drawings to determine the optimum installation location.

OBSTRUCTIONS

Almost any object that falls within the beam pattern can cause reflections that may be misinterpreted as a false liquid level. All possible precautions should be taken to minimize false target reflections with proper installation location. Refer to Figures 6 & 7.

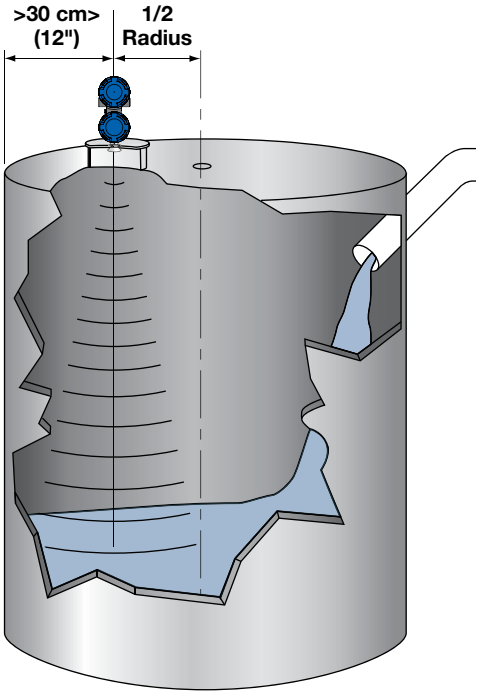

Figure 5

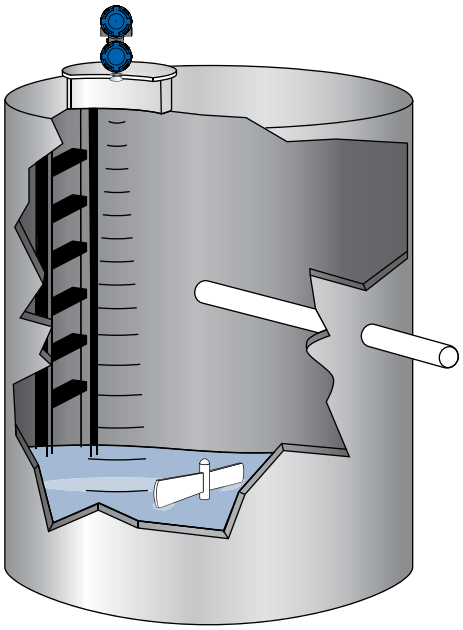

Figure 6

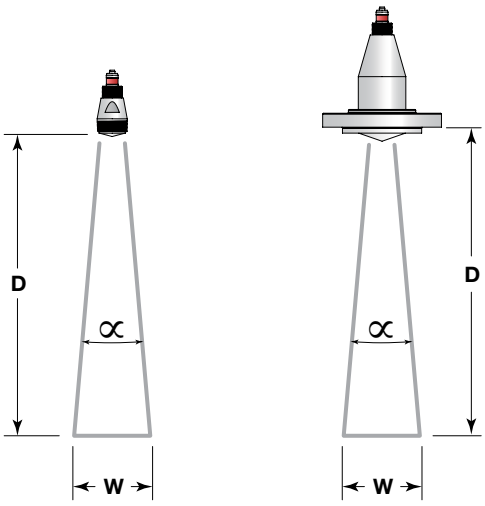

	Beam Spread, W @-3dB; m (ft)			
Antenna Beam Angle (∝)	¾" Horn 13°	1½" Horn 7°	2" Horn 6°	3" Horn 4°
Distance, D				
3 (10)	0.7 (2.3)	0.4 (1.2)	0.3 (1.1)	0.2 (0.7)
6 (20)	1.4 (4.6)	0.8 (2.5)	0.6 (2.1)	0.4 (1.4)
9 (30)	2.1 (6.9)	1.1 (3.7)	1.0 (3.2)	0.6 (2.1)
12 (40)	2.8 (9.2)	1.5 (4.9)	1.3 (4.2)	0.8 (2.8)
15 (50)	3.5 (11.5)	1.9 (6.1)	1.6 (5.3)	1.0 (3.5)
23 (75)	5.3 (17.3)	2.8 (9.2)	2.4 (7.9)	1.6 (5.2)
30 (100)	7.0 (23.1)	3.7 (12.3)	3.2 (10.5)	2.1 (7.0)

Figure 7

MOUNTING

NOZZELS

Improper installation in a nozzle can create “ringing” (undesired signals) which can adversely affect level measurement. Be sure to include any nozzle dimension that may extend down inside the vessel. Refer to Figure 8. (As nozzle influence is application dependent, please consult factory in cases where suggestions cannot be met.)

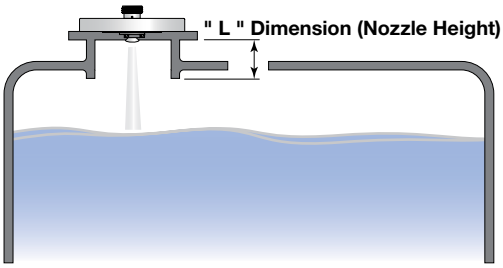

Figure 8

STANDPIPES AND STILLWELLS

The Pulsar Model R80 can be mounted in a standpipe or stillwell but certain items must be considered:

- Metal stillwells only
- Diameter must be consistent throughout length; no reducers or gaps.
- Use horn antennas sized to pipe ID; 20–100mm (¾"–4"); 4-inch pipe can use 3-inch horn.
- Stillwell length must cover complete range of measurement (i.e., liquid must be in stillwell).
- Internal welds should be smooth.
- Vents: holes <3 mm (0.125") diameter, slots <3 mm (0.125") width.
- If an isolation valve is used, it must be a full port ball valve with an I.D. equal to the pipe diameter.
- Configuration must include a proper PIPE I.D parameter.

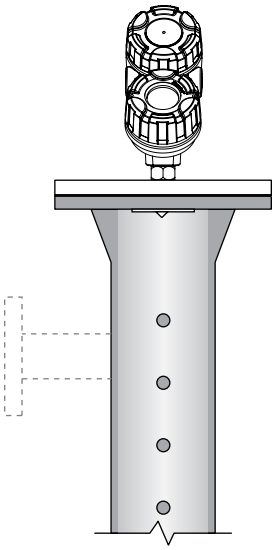

APPLICATIONS

FMCW RADAR

STORAGE AND INTERMEDIATE HOLDING TANKS

CONDITIONS – Calm Surfaces

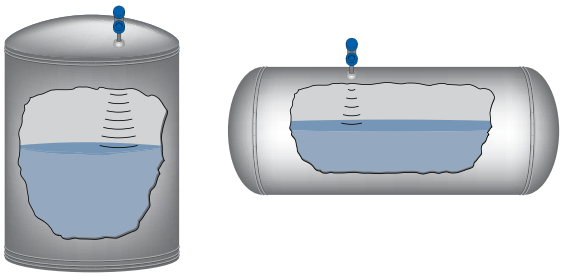

REACTORS

CONDITIONS –
Turbulence and Foam

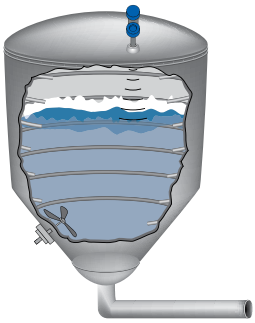

CHAMBERS AND BYPASS

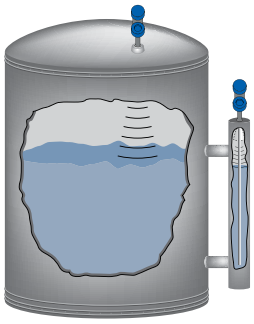

ENCLOSED SUMPS

CONDITIONS –
Turbulence, Foam, and Changing Dielectric

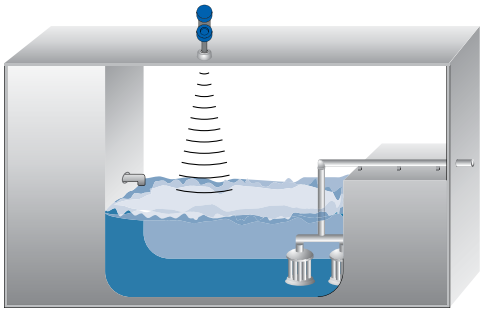

SOLIDS MEASUREMENT

CONDITIONS –
Dust, Dry Material, Low Dielectric

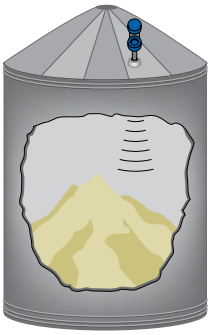

OPEN CHANNEL FLOW APPLICATIONS

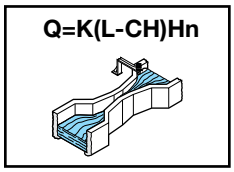

Extensive Selection of Primary Flow Elements

With a total of 35 flume and weir curves stored in the electronics, it would be hard to find an open channel flow application that cannot be handled by the R80 transmitter. Unusual flow applications can readily be accomplished through the use of either the 20-point Custom Table or the Generic Discharge Flow Equation which allows a direct entry of unique flow equations.

Dual Flow Totalizers

Two 7-digit flow totalizers are provided for recording flow in cubic feet, gallons, million gallons, liters, million liters, or cubic meters. One totalizer is resettable and the other is non-resettable. Several multipliers are selectable to allow for proper scaling. Totalizer time is also recorded to show how long each totalizer has been recording flow.

ENCLOSED FLUMES AND WEIRS

CONDITIONS –
Turbulence and Changing Dielectric

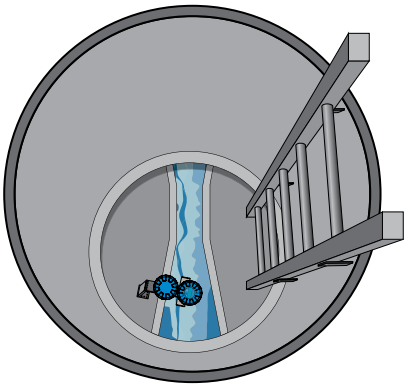

NOTE: For optimal accuracy, mount the transmitter a minimum of 25 cm (10") above the flow element (this is dependent on type and size of the flow element). Consult factory for assistance on this dimension.

TEMPERATURE/PRESSURE

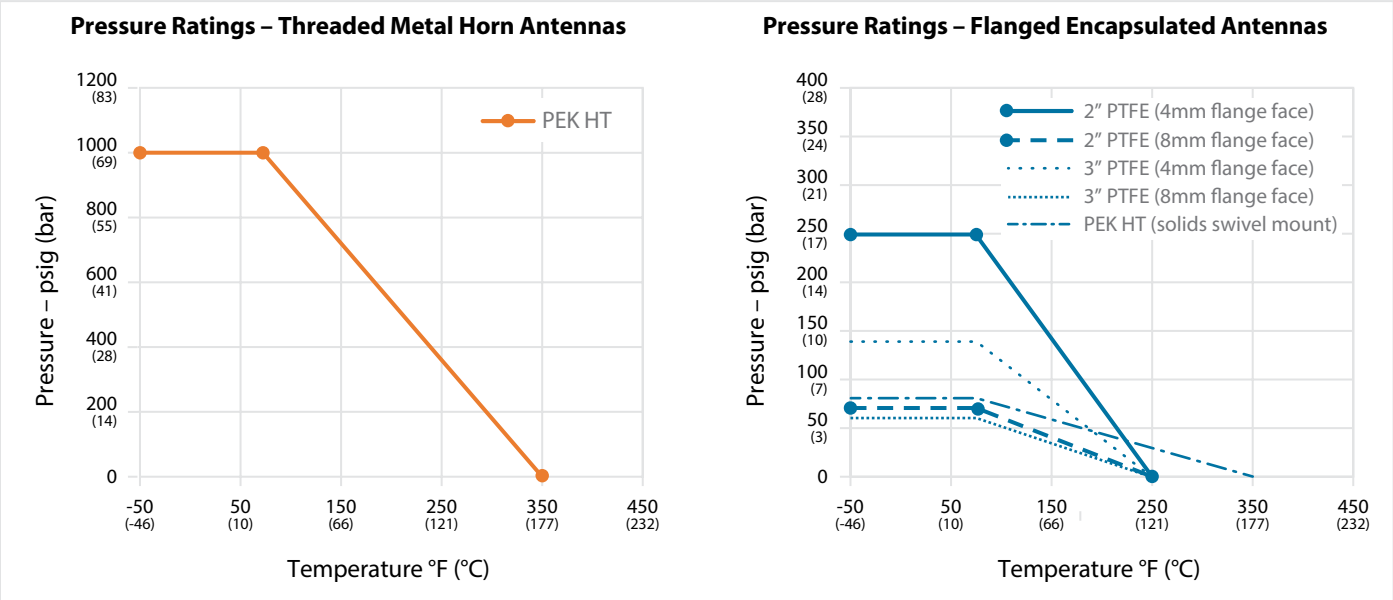

Antenna Model	Horn Size	Lens Thickness	Application	Pressure Rating
RC2	2"	4 mm (0.16")	Liquids	4.8 bar (70 psi)
		8 mm (0.31")		17.2 bar (250 psi)
RC3	3"	4 mm (0.16")	Liquids	4.1 bar (60 psi)
		8 mm (0.31")		9.6 bar (140 psi)
RD2	2"	4 mm (0.16")	Solids – In Tank	5.5 bar (80 psi)
RD3	3"			
			Solids – Out of Tank	Ambient

OPERATING TEMPERATURE RANGE

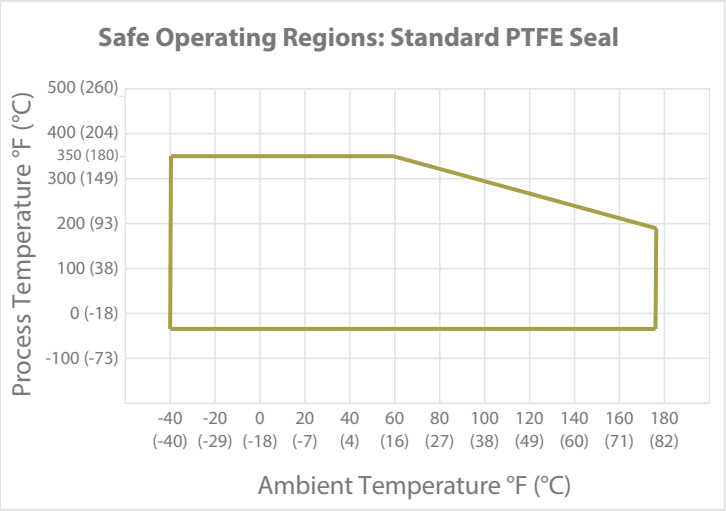

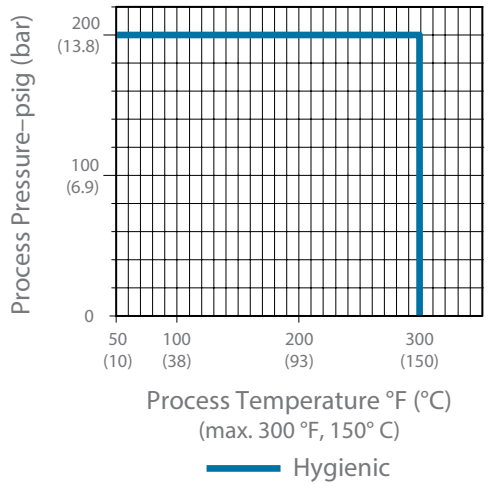

AGENCY APPROVALS

These devices are in compliance with the RED-directive 2014/53/EU, the EMC directive 2014/30/EU, the PED-directive 2014/68/EU, the ATEX directive 2014/34/EU and RoHS directive 2011/65/EU.

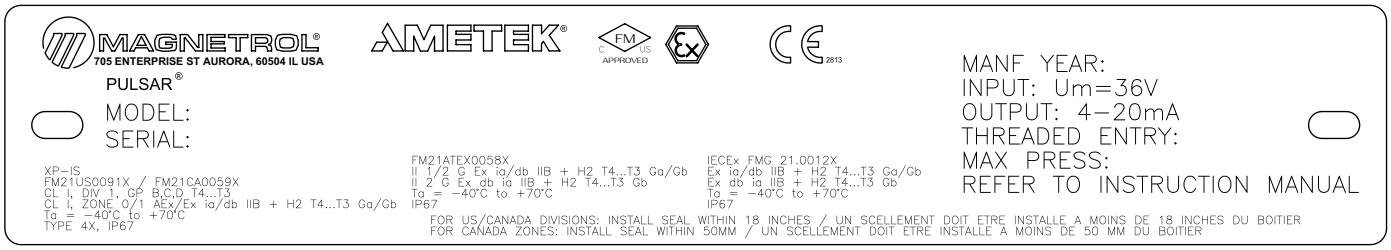

Explosion/Flame Proof - Intrinsically Safe

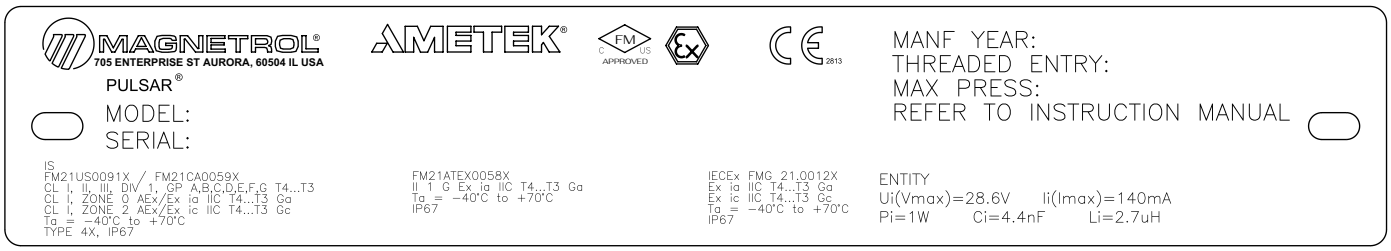

Intrinsically Safe

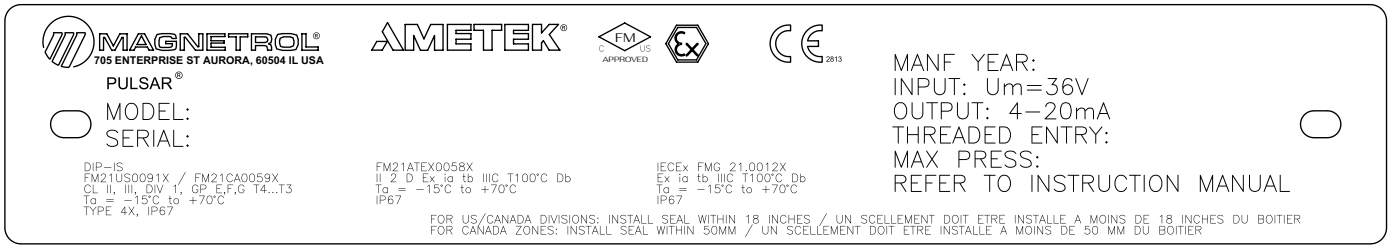

Dust Ignition Proof

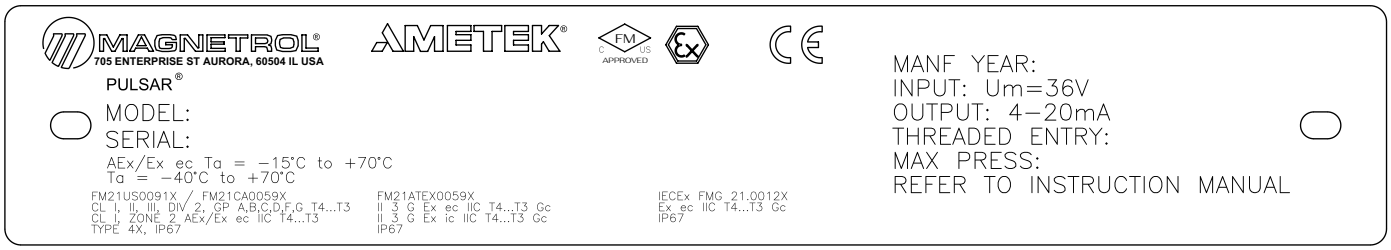

Non-Incendive, Increased Safety

Telecommunications Approvals

Agency	In-Tank	Out of Tank
FCC	47 CFR, Part 15, Subpart C, Section 15.209 Unintentional Radiators	47 CFR, Part 15, Subpart C, Section 15.256
ISED	RSS-211	RSS-211
ETSI	EN 302 372 V2.1.1 (2016-12)	EN 302 729 V2.1.1 (2016-12)

FCC/ISED TLPR Use Configurations for Enclosed Tank Applications Only				
Antenna Type	Frequency Band (GHz)	Reinforced Fiberglass Tank	Concrete Tank	Metal Tank
¾"	77 to 81	Allowed	Allowed	Allowed
1½"	77 to 81	Allowed	Allowed	Allowed
2"	77 to 81	Allowed	Allowed	Allowed
3"	77 to 81	Allowed	Allowed	Allowed

FCC/ISED LPR Use Configurations		
Antenna Type	Frequency Band (GHz)	Open Air / Tank
2”	77 to 81	Allowed
3"	77 to 81	Allowed

SPECIFICATIONS

FUNCTIONAL/PHYSICAL

System Design		
Measurement Principle		Frequency Modulated Continuous Wave (FMCW) Radar 80 GHz
Input		
Measured Variable		Level, determined by the difference in modulated frequencies
Span	Liquids: Solids:	0.2 to 30 meters (0.5 to 100 feet) 0.2 to 60 meters (0.5 to 200 feet)
Output		
Type		4–20 mA with HART: 3.8 mA to 20.5 mA useable (per NAMUR NE43)
Resolution		Analog: .003 mA / Digital Display: 1 mm
Loop Resistance	GP/IS: XP/Flameproof:	590 ohms @ 24 VDC and 22 mA 500 ohms @ 24 VDC and 22 mA
Diagnostic Alarm		Selectable: 3.6 mA, 22 mA (meets requirements of NAMUR NE 43), or HOLD last output
Diagnostic Indication		Meets requirements of Namur NE107
Damping		Adjustable 0–10 seconds
User Interface		
Keypad		4-button menu-driven data entry
Display		Graphic Liquid Crystal Display
Digital Communication		HART ver. 7–w/ Field Communicator, AMS, or FDT DTM (PACT*ware*™), FDI/EDDL
Menu Languages	Transmitter LCD: HART DD:	English, French, German, Spanish, Russian, Portuguese, Polish English, French, German, Spanish, Russian, Chinese, Portuguese, Polish
Voltage (Measured at instrument terminals)		HART: General Purpose (Weather proof)/Intrinsically Safe/Explosion-proof: 11 VDC minimum at terminals under certain conditions (refer to Manual 58-604)
Housing		
Material		IP67/die-cast aluminum A413 (<0.6% copper); optional stainless steel
Net/Gross Weight		Aluminum: 2.0 kg (4.5 lbs.) / Stainless Steel: 4.50 kg (10.0 lbs.)
Cable Entry		½" NPT or M20
SIL 2 Hardware (Safety Integrity Level)		Safe Failure Fraction = 92.3% (HART only); Functional Safety to SIL 2 as 1oo1 in accordance with IEC 61508 (Full FMEDA report available upon request)

ENVIRONMENTAL

Ambient Operating Temperature	-40 to +160 °F (-40 to +70 °C); LCD viewable -20 to +70 °C (-5 to +160 °F)
Storage Temperature	-45 to +85 °C (-50 to +185 °F)
Humidity	0–99%, non-condensing
Electromagnetic Compatibility	Meets CE requirement (EN 61326) and NAMUR NE 21
Surge Protection	Meets CE EN 61326 (1000V)
Shock/Vibration	ANSI/ISA-S71.03 Class SA1 (Shock); ANSI/ISA-S71.03 Class VC2 (Vibration)

PERFORMANCE

Reference Conditions		Reflection from ideal reflector at +20 °C (+70 °F)
Linearity		≤ 1mm
Measured Error		≤ 1mm (Performance in bulk solids will depend heavily on the application)
Resolution		0.1 inch or 1mm
Repeatability		≤ 1mm
Response Time		< 3 seconds (configuration dependent)
Initialization Time		< 30 seconds (configuration dependent)
Ambient Temperature Effect	Digital: Analog:	< 3 mm/10 K, 10 mm maximum < 0.03 %/10 K or 0.3 % maximum relating to the 16.7 mA span)
Maximum Rate of Change		450 cm (180 inches)/minute

ANTENNA SPECIFICATIONS

FUNCTIONAL/PHYSICAL

Antenna Material	316 SS, PEEK, PTFE, PEK
Process Seal Material	PTFE, PEEK with O-rings
Maximum Process Temperature	Up to +176 °C @ 70 bar (+350 °F @ 1000 psi)
Maximum Process Pressure	PEEK with O-rings: -1 to 70 bar @ +20 °C (-14.7 to 1000 psi @ +70 °F) 4mm PTFE lens: -1 to 5 bar @ +20 °C (-14.7 to 70 psi @ +70 °F) 8mm PTFE lens: -1 to 27 bar @ +20 °C (-14.7 to 400 psi @ +70 °F)
Vacuum Service	<10-8 cc/sec @ 1 atmosphere helium
Minimum Dielectric (application dependent)	1.7 (1.4 with stillwells)

DIMENSIONAL SPECIFICATIONS

MM (INCHES)

Transmitter

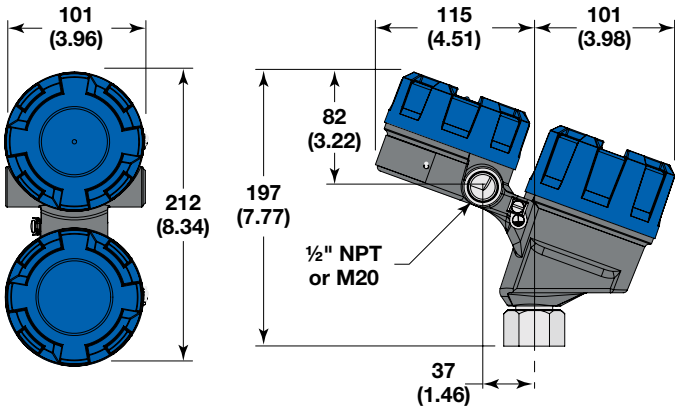

Threaded Metal Antennas

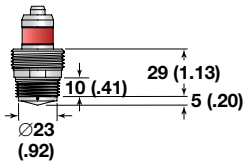

3/4" NPT

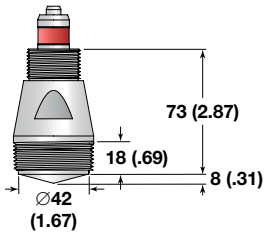

1½" NPT

Hygienic Antennas

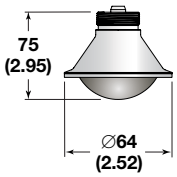

2" Hygienic

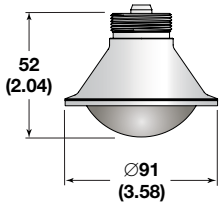

3" Hygienic

Flanged Encapsulated Antennas

	A	B
4 mm (0.16") Lens	14 (.54)	18 (.69)
8 mm (0.31") Lens	18 (.70)	21 (.83)

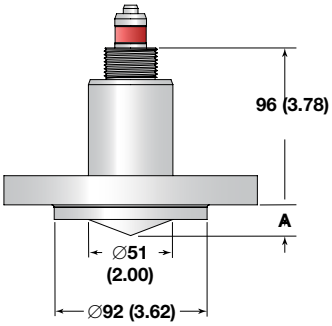

2" 150# Flange

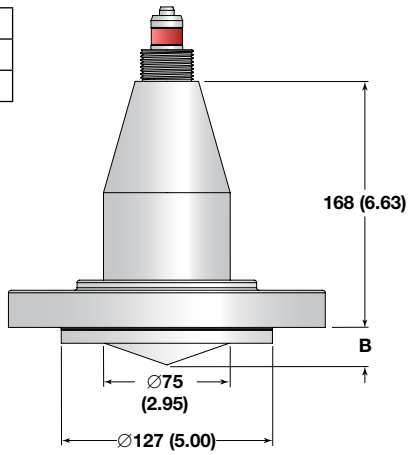

3" 150# Flange

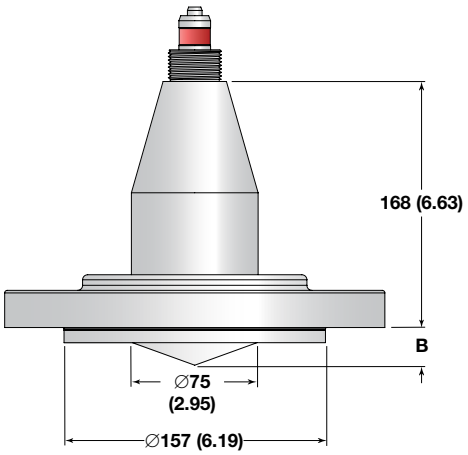

4" 150# Flange

Bulk Solids Antennas

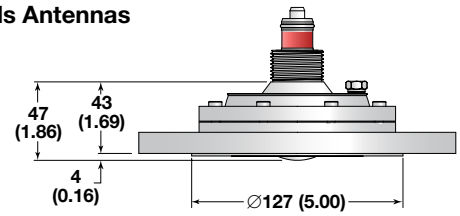

3" 150# Flange with Swivel Mount

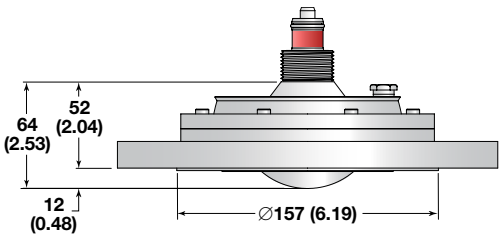

4" 150# Flange with Swivel Mount

TRANSMITTER MODEL NUMBER

1–3 | MEASUREMENT SYSTEM

R 8 0	Through-Air Radar Level Transmitter - 80 GHz FMCW Radar

4 | POWER

5	24 VDC, Two Wire

5 | SIGNAL OUTPUT

1	4-20 mA with HART

6 | SAFETY OPTIONS

1	SIL 2 Hardware

7 | ACCESSORIES/MOUNTING

0	No Digital Display and Keypad – Integral with rotatable housing
3	No Digital Display and Keypad – Integral with non-rotatable housing (Available only when digit **8** = 0)
A	Digital Display and Keypad – Integral with rotatable housing
D	Digital Display and Keypad – Integral with non-rotatable housing (Available only when digit **8** = 0)

8 | CLASSIFICATION

0	General Purpose, Weatherproof (IP 67)
1	Intrinsically Safe (Available only when digit **7** = 0 or A)
3	Explosion-proof/Flameproof (with IS antenna) (Available only when digit **7** = 0 or A)
C	Non-Incendive, Increased Safety (Available only when digit **7** = 0 or A)
D	Dust Ignition-proof / Protection by Enclosure (Available only when digit **7** = 0 or A)

9 | HOUSING

1	Die-cast Aluminum, Dual Compartment, 20-degree
2	Investment Cast, 316ss, Dual Compartment, 20-degree

10 | CONDUIT CONNECTION

0	½" NPT
1	M20
2	½" NPT with sunshade
3	M20 with sunshade

R	8	0	–	5	1	1		–			
1	2	3		4	5	6	7		8	9	10

ANTENNA MODEL NUMBER

1–2 | TECHNOLOGY

R C	Through-Air Radar Antenna: 80 GHz FMCW Radar – Liquids – (Must select 0 for digit **7**)
R D	Through-Air Radar Antenna: 80 GHz FMCW Radar – Solids – (Must select 0 for digit **6**, 1 for digit **7**, A for digit **8**, and 0 for digit **10**)

3 | CONFIGURATION/STYLE

0	¾" Horn – (Available only when digit **2** = C)
1	1½" Horn – (Available only when digit **2** = C)
2	2" Horn – (Must select 5 3 for digits **4–5** when digit **2** = D)
3	3" Horn – (Must select 6 3 for digits **4–5** when digit **2** = D)

4–5 | PROCESS CONNECTION – SIZE/TYPE

1 1	¾" NPT	**3 1**	1½" NPT thread	
ASME Flanges		EN (DIN) Flanges		
4 3	2" 150# ASME raised face flange	**D A**	DN 50, PN 16	EN 1092-1 Type A
4 4	2" 300# ASME raised face flange	**D B**	DN 50, PN 25/40	EN 1092-1 Type A
4 5	2" 600# ASME raised face flange	**D D**	DN 50, PN 63	EN 1092-1 Type B2
5 3	3" 150# ASME raised face flange	**D W**	DN 50, PN 16	EN 1092-1 Type B1
5 4	3" 300# ASME raised face flange	**D Z**	DN 50, PN 25/40	EN 1092-1 Type B1
5 5	3" 600# ASME raised face flange	**E A**	DN 80, PN 16	EN 1092-1 Type B1
6 3	4" 150# ASME raised face flange	**E B**	DN 80, PN 25/40	EN 1092-1 Type A
6 4	4" 300# ASME raised face flange	**E D**	DN 80, PN 63	EN 1092-1 Type B2
6 5	4" 600# ASME raised face flange	**E W**	DN 80, PN 16	EN 1092-1 Type B1
		E Z	DN 80, PN 25/40	EN 1092-1 Type B1
Hygienic (Available only when digit **8** = A)		**F A**	DN 100, PN16	EN 1092-1 Type A
4 P	2" Tri-Clover® type, 16 AMP hygienic flange	**F B**	DN 100, PN 25/40	EN 1092-1 Type A
5 P	3" Tri-Clover® type, 16 AMP hygienic flange	**F D**	DN 100, PN 63	EN 1092-1 Type B2
		F W	DN 100, PN 16	EN 1092-1 Type B1
		F Z	DN 100, PN 25/40	EN 1092-1 Type B1

6 | CONSTRUCTION CODES

0	Industrial
K	ASME B31.1
L	ASME B31.3
M	ASME B31.3 & NACE MR0175 / MR0103
N	NACE MR0175 / MR0103

7 | FLANGE OPTIONS

0	None
1	Swivel-mount and Purge Connection

8 | MATERIAL OF CONSTRUCTION - WETTED SURFACES

A	316SS/316L (Available with threaded process connection: digit **4** = 1 or 3, or Hygienic: when digit **5** = P)
1	PTFE Faced Flange: 4mm (0.16") thick: digit **10** = N
2	PTFE Faced Flange: 8mm (0.31") thick: digit **10** = N

9 | TELECOMMUNICATIONS OPTIONS

0	Liquids
1	Solids – In Tank (To specified process conditions)
2	Solids – Out of Tank (Ambient process conditions)

10 | O-RING MATERIALS/SEAL OPTIONS

0	Viton
2	Kalrez 4079
8	Simriz SZ485 (formerly Aegis PF128) — NACE
A	Kalrez 6375
N	None (when digit **3** = 2 or 3)

R			–					–				–	0	0	–	0	0	0
1	2	3		4	5	6	7		8	9	10		11	12		13	14	15

QUALITY

The quality assurance system in place at AMETEK LMS guarantees the highest level of quality throughout the company. AMETEK LMS is committed to providing full customer satisfaction both in quality products and quality service.

The AMETEK LMS quality assurance system is certified to ISO 9001, affirming our commitment to internationally recognized quality management standards and continuous improvement.

WARRANTY

All AMETEK LMS electronic level and flow controls are warranted free of defects in materials or workmanship for eighteen months from the date of original factory shipment.

If returned within the warranty period; and, upon factory inspection of the control, the cause of the claim is determined to be covered under the warranty; then, AMETEK LMS will repair or replace the control at no cost to the purchaser (or owner) other than transportation.

AMETEK LMS shall not be liable for misapplication, labor claims, direct or consequential damage or expense arising from the installation or use of equipment. There are no other warranties expressed or implied, except special written warranties covering some AMETEK LMS products.

For additional information, see Instruction Manual 58-604.

Pulsar Radar transmitters may be protected by one or more of the following U.S. Patent Nos.:
US 6,062,095; US 6,980,174; US 7,102,584; US 7,106,248

MAGNETROL® / AMETEK® LEVEL MEASUREMENT SOLUTIONS

ametek-measurement.com

705 Enterprise Street • Aurora, Illinois 60504-8149 USA
630.969.4000 • info.magnetrol@ametek.com

Copyright © 2026 AMETEK Magnetrol USA, LLC
Performance specifications are effective with date of issue and are subject to change without notice.

BULLETIN: 58-104.3
EFFECTIVE: March 2026
SUPERSEDES: August 2024