MAGNETROL® / AMETEK®
LEVEL MEASUREMENT SOLUTIONS

Echotel® Model 961/962 Ultrasonic Level Switches

DESCRIPTION

Increasing demands for compliance with safety systems and overfill protection has mandated more reliable point level measurement. Echotel® Models 961 & 962 Ultrasonic Level Switches meet these demands with reliable transducer designs, extensive hazardous location approvals, and an advanced self-test technology.

Model 961 offers the ultimate solution to reliable single point liquid level measurement. This advanced switch uses pulsed signal technology for superior performance in difficult process conditions, and to provide excellent immunity from sources of electrical noise interference. Extensive self-testing of the electronics and transducer make this advanced switch suitable for use in Safety Integrity Level (SIL) 2 loops.

Model 962 is a dual point switch that can be used as a level controller, or to control pumps in an auto fill or auto empty mode. The tip sensitive lower gap performs well in aerated or foamy liquids, and can measure to within 1⁄4” of the vessel bottom. The rigidity of the unique flow-through upper gap allows separations of up to 127" (322 cm) between the upper and lower transducer gaps.

APPLICATIONS

- Overfill protection
- Seal pot level
- High/low level alarm
- Chemical Tanks
- Pump protection/control
- Low density/low dielectric
- Cryogenic liquids
- Level with spray balls
- Fill lines



Model 961



Model 962

FEATURES

- No calibration required
- Performance independent of liquid type or properties such as density (SG)
- Single or dual point liquid level measurement
- Advanced self-test and diagnostics
- Adjustable time delay for turbulent or aerated liquids
- Relay output or mA current shift with separate malfunction indication
- Integral or remote mount electronics
- Pulsed signal technology
- FM, ATEX and IEC agency approvals
- Suitable for Safety Integrity Level (SIL) 1 and 2 loops

INDUSTRIES

- Chemical
- Oil and Gas
- Pulp and paper
- Food and pharmaceutical
- Power
- Water and wastewater

TECHNOLOGY

BASIC OPERATION

Model 961/962 switches utilize ultrasonic energy to detect the presence or absence of liquid in a single or dual point transducer. Ultrasonic contact level technology uses high-frequency sound waves that are easily transmitted across a transducer gap in the presence of a liquid media, but are attenuated when the gap is dry. Model 961/962 switches use an ultrasonic frequency of 2 MHz to perform this liquid level measurement in a wide variety of process media and application conditions.

The transducer uses a pair of piezoelectric crystals that are encapsulated in epoxy at the tip of the transducer. The crystals are made of a ceramic material that vibrates at a given frequency when subjected to an applied voltage. The transmit crystal converts the applied voltage from the electronics into an ultrasonic signal. When liquid is present in the gap, the receive crystal senses the ultrasonic signal from the transmit crystal and converts it back to an electrical signal. This signal is sent to the electronics to indicate the presence of liquid in the transducer gap. When there is no liquid present, the ultrasonic signal is attenuated and is not detected by the receive crystal.

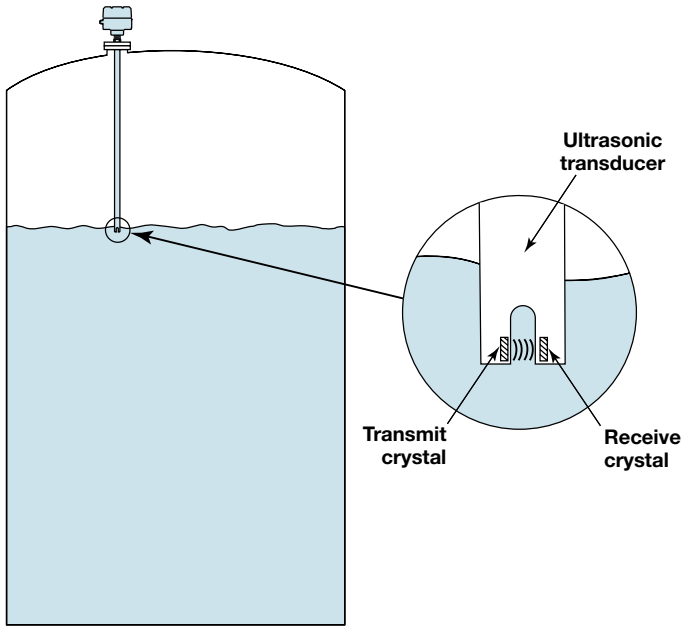

Ultrasonic signal transmission across transducer gap

PULSED SIGNAL TECHNOLOGY



Challenging process conditions such as aeration, suspended solids, and high viscosities are easily handled with the pulsed signal technology utilized in the 961/962 switches. Pulsed signal circuitry drives the transmit piezoelectric crystal to produce powerful pulses of high-frequency ultrasonic energy. These ultrasonic pulses are readily transmitted through liquids, but are attenuated when the transducer gap is dry. This technology also provides excellent immunity from electromagnetic noise interference.

Pulsed signal technology makes the 961/962 units more reliable than older continuous wave ultrasonic switches. Unlike many tuning forks, pulsed signal ultrasonic switches do not need to be configured for different media densities, making these units the most universally applied level switches on the market today.

SAFETY INTEGRITY LEVEL (SIL)



Critical process control applications demand reliable instruments that provide high levels of safety. The introduction of standards such as IEC 61508, IEC 61511 and ISA 84, have generated interest in using Safety Instrumented Systems (SIS) as a means to define the reliability of instruments in a control loop. All versions of the Model 961/962 switches undergo a detailed performance evaluation called a Failure Modes, Effects and Diagnostics Analysis (FMEDA). Three key components of the FMEDA are the Safety Integrity Level (SIL), Safe Failure Fraction (SFF) and the average Probability of Failure on Demand (PFDavg).

In most cases model 961/962 switches are suitable for use in SIL 2 loops. Contact AMETEK LMS for FMEDA reports or reference SIL manual 51-650.

ADVANCED SELF-TEST AND DIAGNOSTICS

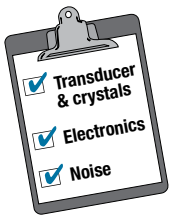

Ultrasonic switches are often used as the last means of detecting whether a process vessel will overflow and cause a spill of potentially hazardous liquids, or empty out and possibly cavitate the pumps. In these critical applications it is desirable to have a method of periodically testing the ultrasonic switch to ensure that it is functioning properly.

Model 961/962 switches feature an advanced self-test technology that not only tests the electronics, transducer, and piezoelectric crystals, but also tests for the presence of industrial sources of environmental noise. Should the switch detect any problems a malfunction output is generated to alarm the user, and a red LED is lit to indicate a diagnostic alarm condition.

Self-test is performed automatically and continuously several times per second to verify proper operation of 961/962 switches. In addition, a pushbutton is provided to initiate a manual self-test mode. Pressing this test button stops all transmit pulses, which simulates an electronics failure. This failure is reported as:

- 3.6 or 22 mA (selectable) with current shift output units
- SPDT malfunction relay de-energizes with relay output units

Taking diagnostics one step further is the unique noise self-test mode feature that is standard in all 961/962 switches. This tests for electromagnetic and acoustical noise that can influence many instrumentation technologies. If high levels of environmental noise are detected, the electronics reports a fault condition to alert the user of potential instrumentation reliability concerns.

A microprocessor in the 961/962 electronics continuously monitors all self-test data. Should a fault occur, the microprocessor can determine whether the malfunction is due to the electronics, transducer, piezoelectric crystals, or the presence of environmental noise. A pushbutton and Fault LED is used to assist in troubleshooting the switch:

- ✺ One flash of the Fault LED indicates a problem with the transducer or piezoelectric crystals
- ✺ ✺ Two flashes of the Fault LED indicates a problem with one of the electronics boards
- ✺ ✺ ✺ Three flashes of the Fault LED indicates excessive levels of environmental noise

ADJUSTABLE TIME DELAY



Turbulence and splashing can cause some fixed time response switches to produce false level alarms. Model 961/962 switches overcome this difficulty with an adjustable time delay feature.

A potentiometer allows a ½ to 10 second delay to be set to disregard waves or splashes, and reliably detect the true liquid level.

SAFETY INTEGRITY LEVEL (SIL)



Dependable point level measurement begins with reliable sensor design. Over 30 years of ultrasonic level switch technology experience is behind the Model 961/962 single and dual gap transducers. The result is an extremely robust transducer design that offers superior performance in difficult process conditions.

Model 961 single point has a tip-sensitive transducer with an arch-shaped gap for superior performance in aerated or foamy liquids. Dual point Model 962 features a tip sensitive lower gap and flow through upper gap. This robust design allows separations of 127 inches (322 cm) between the upper and lower transducer gaps.

APPLICATIONS

TYPICAL

Model 961 single point switches may be used for high or low level alarm, as well as for pump protection. The Model 962 dual point unit is typically configured to measure high/low, high/high, or low/low levels. Common applications include safety-critical high-level alarms to conform to API 2350 or seal pot level to conform to API 682.

The single point 961 can be mounted vertically or horizontally in vessels, bridles, or pipes. The dual gap 962 is always top mounted.

A broad selection of transducer materials allow the 961/962 to be used in a wide variety of process media. Metallic transducers include 316 SS, Hastelloy® C, and Monel®. The 316 SS transducer has a NACE construction option for sour gas service, and can also be built per ASME B31.1 and B31.3 piping codes. Thermoplastic transducers include Kynar® and CPVC. These corrosion resistant plastic transducers feature a stiffening tube that runs the length of the transducer for extra rigidity. Kynar-faced 316 SS flange options are offered with the Kynar transducers.

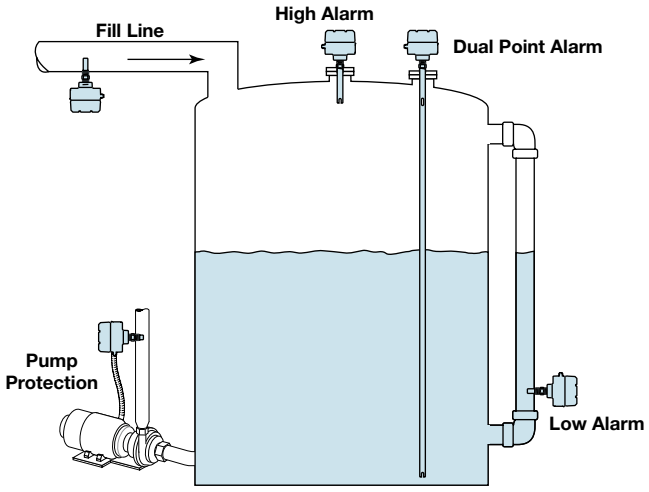

PUMP CONTROL

A DIP switch on the Model 962 allows it to be configured to control level, or to function as a pump controller. In the pump control mode the unit can perform auto fill or auto empty of tanks, sumps, or wet wells. The tip sensitive lower gap allows liquid levels to be pumped down to within ¼" from the bottom of the vessel. The rigidity of the flow through upper gap allows the 962 to be used even when sumps experience severe turbulence from vessel fill lines.

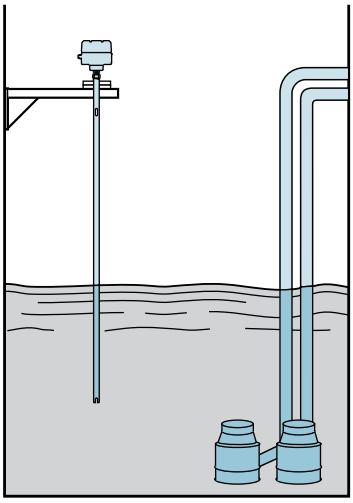

ELECTRONICS SPECIFICATIONS

MODEL 961/962 WITH RELAY OUTPUT

Supply Voltage		12 to 28.4 VDC, or 100 to 265 VAC, 50/60 Hz
Relay Outputs	961:	One DPDT level relay and one SPDT malfunction relay
	962:	Two SPDT level relays and one SPDT malfunction relay
Relay Ratings	DPDT:	5 amps @ 120 VAC, 250 VAC, and 30 VDC, 0.4 amp @ 110 VDC
	SPDT:	5 amps @ 120 VAC, 250 VAC, and 30 VDC, 0.15 amp @ 125 VDC
Fail-safe		Selectable for high or low level
Power Consumption	961/962	Less than 3 watts
Ambient Temperature		-40 to +160 °F (-40 to +70 °C)

MODEL 961/962 WITH CURRENT SHIFT OUTPUT

Supply Voltage		12 to 28.4 VDC
Current Shift Output	961:	8 mA normal operation, 16 mA level alarm (±1 mA)
	962:	8 mA normal operation, 12 mA lower gap alarm, 16 mA upper gap alarm (±1 mA)
	961/962:	3.6 mA or 22 mA selectable fault signal (±1 mA)
Loop Resistance	:	104 ohms with 12 VDC input, 1100 ohms with 28.4 VDC input
Fail-safe		Selectable for high or low level
Power Consumption	961/962	Less than 1 watt
Ambient Temperature		-40 to +160 °F (-40 to +70 °C)

TRANSDUCER SPECIFICATIONS

MODEL 9A1/9M1 SINGLE POINT

Transducer Material	Material Code (page 10)	Operating Temperature Range	Maximum Pressure ②	Actuation Length
316 Stainless Steel	A①, S, N, K, M	-40 to +325 °F (-40 to +163 °C)	2000 psi (138 bar) ③	1" and 2" (3 and 5 cm)
316 Stainless Steel	A①, S, N, K, M	-40 to +325 °F (-40 to +163 °C)	1500 psi (103 bar)	3" to 130" (6 to 330 cm)
Hastelloy C-276	B	-40 to +325 °F (-40 to +163 °C)	2000 psi (138 bar) ③	1" and 2" (3 and 5 cm)
Hastelloy C-276	B	-40 to +325 °F (-40 to +163 °C)	1500 psi (103 bar)	3" to 130" (6 to 330 cm)
Monel	C	-40 to +325 °F (-40 to +163 °C)	1200 psi (83 bar)	1" to 130" (3 to 330 cm)
Kynar	R	-40 to +250 °F (-40 to +121 °C)	see graph below	2" to 130" (5 to 330 cm)
CPVC	P	-40 to +180 °F (-40 to +82 °C)	see graph below	2" to 130" (5 to 330 cm)

MODEL 9A2/9M2 DUAL POINT

Transducer Material	Material Code (page 10)	Operating Temperature Range	Maximum Pressure ②	Actuation Length
316 Stainless Steel	A, K	-40 to +325 °F (-40 to +163 °C)	1500 psi (103 bar)	5" to 130" (13 to 330 cm)
CPVC	P	-40 to +180 °F (-40 to +82 °C)	see graph below	5" to 130" (13 to 330 cm)

① Model 9A1/9M1 Material Code “A” has a Cryogenic Transducer Option for -110 to +250 °F (-80 to +120 °C) operating temperature range

② Minimum pressure for all transducers is -10 psi (-0.7 bar)

③ 2000 psi applicable for 1-inch length with NPT and 2-inch length for BSP; 2-inch length NPT is 1500 max.

Kynar Transducer Ratings

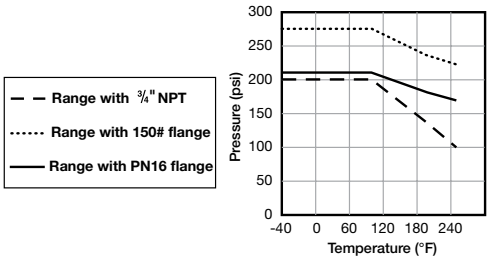

CPVC Transducer Ratings

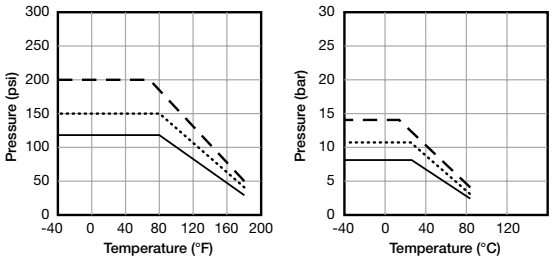

PERFORMANCE SPECIFICATIONS

Repeatability		±0.078" (2 mm)
Response Time		½ second typical
Time Delay		Variable 0.5 – 10 seconds on rising and falling levels
Self-Test	Automatic:	Continuously verifies operation of electronics, transducer, piezoelectric crystals, and electrical noise
	Manual:	Push button verifies operation of electronics, transducer, and piezoelectric crystals
Shock Class		ANSI/ISA-S71.03 Class SA1
Vibration Class		ANSI/ISA-S71.03 Class VC2
Humidity		0 – 99%, non-condensing
Electromagnetic Compatibility		Meets CE requirements EN 61326

PHYSICAL SPECIFICATIONS

Housing Material		Cast aluminum A356-T6, cast 316 stainless steel, or deep drawn 304 stainless steel (hygienic housing)
Cable Entry		Dual ¾" NPT, or M20 connections (one end is plugged)
Gross Weight	961/962 Electronics:	2.2 lbs. (1.0 kg)
	2" (5 cm) Transducer:	0.6 lbs. (0.3 kg)

DIMENSIONAL SPECIFICATIONS

INCHES (MM)

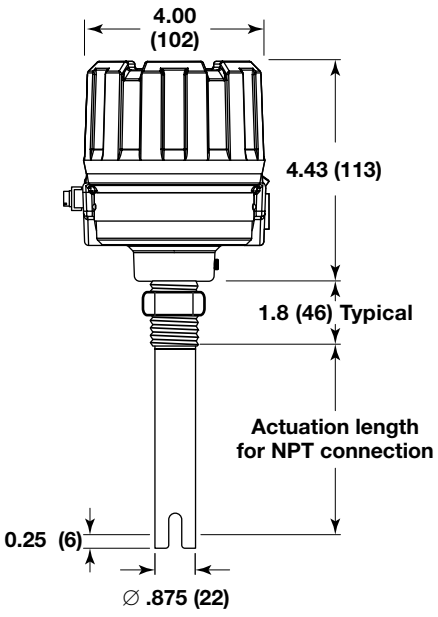

Model 961
with Cast Aluminum Housing
with NPT Connection

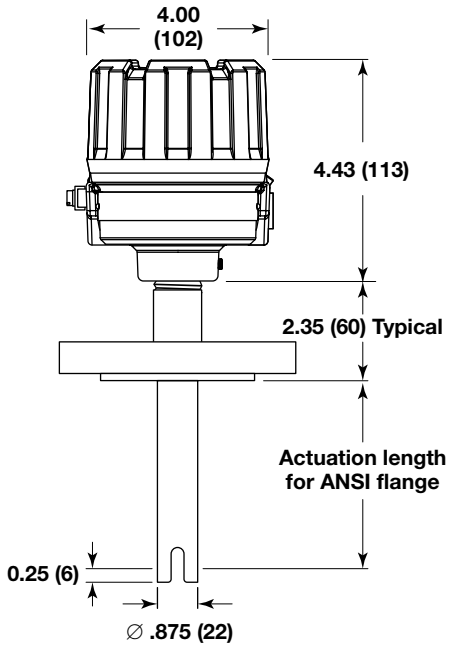

Model 961
with Cast Stainless Steel
Housing and ASME Flange

DIMENSIONAL SPECIFICATIONS

INCHES (MM)

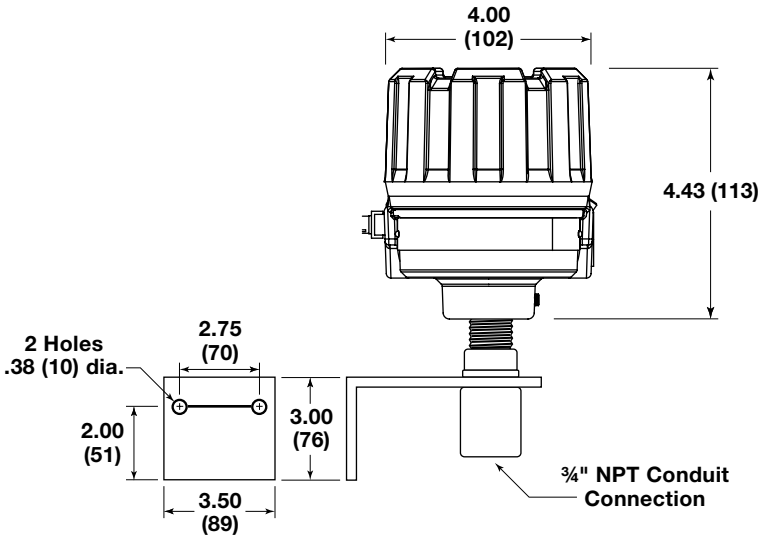

Model 961/962 with Remote Electronics

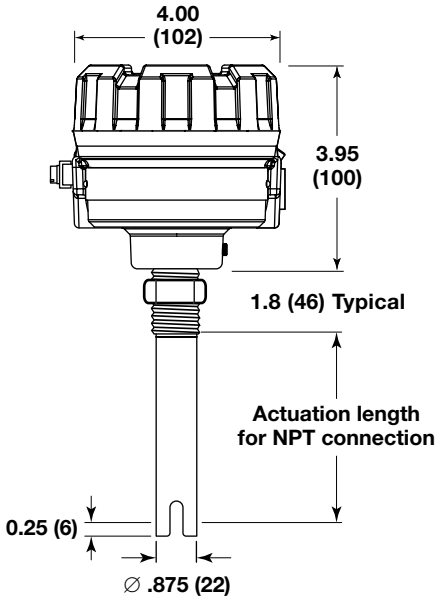

Remote Transducer
with NPT Connection

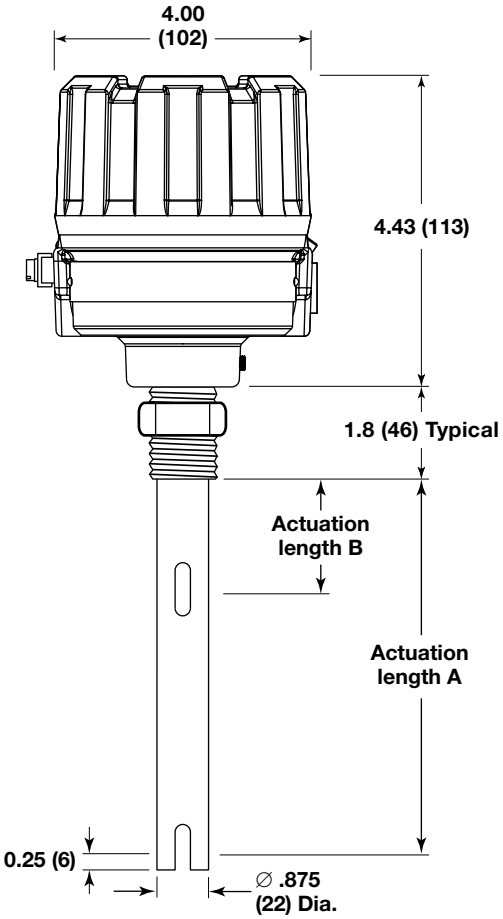

Model 962
with NPT Connection

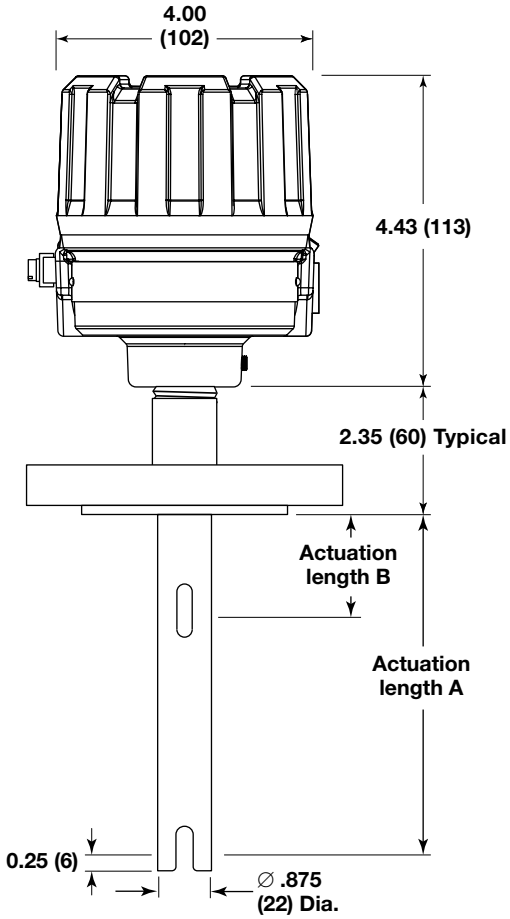

Model 962
with ASME Flange

MODEL NUMBER

961/962 ELECTRONICS

1 2 3 | BASIC MODEL NUMBER

9 6 1	Single-point electronics
9 6 2	Dual-point electronics

4 | INPUT POWER

2	12 to 35 VDC line-powered
5	12 to 35 VDC loop-powered
7	100 to 265 VAC line-powered

5 | OUTPUT SIGNAL

0	mA current shift (available with Input Power code 5)
D	5-amp gold flash relays (available with Input Power codes 2 or 7)

7 | HOUSING COVER

0	Standard housing cover
1	Glass window cover (available with Electronics Housing codes 0 or 1)

8 | MOUNTING

0	Integral
1	Remote (requires connecting cable)
2	Integral / High Vibration (available with Output Signal code D)
3	Remote / High Vibration (available with Output Signal code D)

9 | AGENCY APPROVAL

1	FM Intrinsically Safe, Explosion Proof & Non-Incendive (available with Output Signal code 0)
3	FM Explosion Proof & Non-Incendive (available with Output Signal code D)
A	ATEX/IECEx Intrinsically Safe (available with Outut Signal code 0)
C	ATEX/IECEx Flameproof (available with Output Signal code 0 or D)

10 | ELECTRONICS HOUSING

0	Cast aluminum with ¾" NPT dual conduit entries
1	Cast aluminum with M20 dual conduit entries
2	Cast SS with ¾" NPT dual conduit entries
3	Cast SS with M20 dual conduit entries

9	6		–					–			
1	2	3		4	5	6	7		8	9	10

CONNECTING CABLE

7 | ELECTRONICS MODEL

6	Remote cable for Model 961
7	Remote cable for Model 962

8 9 10 | CONNECTING CABLE LENGTH (FEET)

Maximum Length: 150 feet (Minimum Length: 10 feet)
Example: 12 feet = **012**

0	3	7	–	3	3	1		–			
1	2	3		4	5	6	7		8	9	10

MODEL NUMBER

961 SINGLE POINT TRANSDUCER

2 | TRANSDUCER UNIT OF MEASURE

A	English (length in inches)
M	Metric (length in centimeters)

4 | MATERIALS OF CONSTRUCTION

A	316/316L stainless steel
N	316/316L stainless steel, NACE construction
K	316/316L stainless steel, ASME B31.1 & B31.3 construction – CRN Available
M	316/316L stainless steel, ASME B31.1, B31.3 & NACE construction – CRN Available
B	Hastelloy C-276
C	Monel
P	CPVC (use only with Process Connection codes 11, 23, 33, 43, BA, CA, DA) – CRN Available
R	Kynar (use only with Process Connection codes 11, 23, 33, 43, BA, CA, DA) – CRN Available ①

① Flanged Kynar transducers have Kynar faced 316 stainless steel flanges

5 6 | PROCESS CONNECTIONS

THREADED CONNECTIONS	
0 0	Compression Fitting ② (customer supplied)
1 1	¾" NPT
1 2	¾" BSP (G3/4)
2 1	1" NPT
2 2	1" BSP (G1)

HYGIENIC CONNECTIONS	
3 T	1½" Tri-Clamp® 16 AMP fitting
4 T	2" Tri-Clamp® 16 AMP fitting
V V	DN65 – Varivent® Type N

② Available only with Materials of Construction code A & Transducer Option code A.

ASME RAISED FACE FLANGES	
2 3	1" 150# ASME RF flange
2 4	1" 300# ASME RF flange
2 5	1" 600# ASME RF flange
3 3	1½" 150# ASME RF flange
3 4	1½" 300# ASME RF flange
3 5	1½" 600# ASME RF flange
4 3	2" 150# ASME RF flange
4 4	2" 300# ASME RF flange
4 5	2" 600# ASME RF flange
5 3	3" 150# ASME RF flange
5 4	3" 300# ASME RF flange
5 5	3" 600# ASME RF flange
6 3	4" 150# ASME RF flange
6 4	4" 300# ASME RF flange
6 5	4" 600# ASME RF flange

EN FLANGES	
B A	DN 25 PN 16 EN 1092-1 Type A
B B	DN 25 PN 25/40 EN 1092-1 Type A
B C	DN 25 PN 63/100 EN 1092-1 Type B2
C A	DN 40 PN 16 EN 1092-1 Type A
C B	N 40 PN 25/40 EN 1092-1 Type A
C C	DN 40 PN 63/100 EN 1092-1 Type B2
D A	DN 50 PN 16 EN 1092-1 Type A
D B	DN 50 PN 25/40 EN 1092-1 Type A
D D	DN 50 PN 63 EN 1092-1 Type B2
D E	DN 50 PN 100 EN 1092-1 Type B2

7 | TRANSDUCER OPTIONS

A	Standard design
C	Cryogenic design to -110 °F (-80 °C) (available with Materials code A)

8 9 10 | ACTUATION LENGTH (unit of length specified in second digit)

1" to 130" (120" max. for Kynar & CPVC) in 1" increments (Ex: 4 inches = 004) 1" min. for NPT process connections 2" min. for BSP, hygienic, flanged connections, and all CPVC and Kynar probes 5" min. for compression fitting connections
3 to 330 cm (305 cm max. for Kynar & CPVC) in 1 cm increments (Ex: 6 cm = 006) 3 cm min. for NPT process connections 5 cm min. for BSP, hygienic, flanged connections, and all CPVC and Kynar probes 13 cm min. for compression fitting connections

9		1	–					–			
1	2	3		4	5	6	7		8	9	10

MODEL NUMBER

962 DUAL POINT TRANSDUCER

2 | TRANSDUCER UNIT OF MEASURE

A	English (length in inches)
M	Metric (length in centimeters)

4 | MATERIALS OF CONSTRUCTION

A	316/316L stainless steel
N	316/316L stainless steel, NACE construction
K	316/316L stainless steel, ASME B31.1 & B31.3 construction – CRN Available
M	316/316L stainless steel, ASME B31.1, B31.3 & NACE construction – CRN Available
P	CPVC (use only with Process Connection codes 11, 23, 33, 43, BA, CA, DA) – CRN Available

① Flanged Kynar transducers have Kynar faced 316 stainless steel flanges

5 6 | PROCESS CONNECTIONS

THREADED CONNECTIONS	
1 1	¾" NPT
1 2	¾" BSP (G3/4)
2 1	1" NPT
2 2	1" BSP (G1)

ASME RAISED FACE FLANGES	
2 3	1" 150# ASME RF flange
2 4	1" 300# ASME RF flange
2 5	1" 600# ASME RF flange
3 3	1½" 150# ASME RF flange
3 4	1½" 300# ASME RF flange
3 5	1½" 600# ASME RF flange
4 3	2" 150# ASME RF flange
4 4	2" 300# ASME RF flange
4 5	2" 600# ASME RF flange
5 3	3" 150# ASME RF flange
5 4	3" 300# ASME RF flange
5 5	3" 600# ASME RF flange
6 3	4" 150# ASME RF flange
6 4	4" 300# ASME RF flange
6 5	4" 600# ASME RF flange

EN FLANGES	
B A	DN 25 PN 16 EN 1092-1 Type A
B B	DN 25 PN 25/40 EN 1092-1 Type A
B C	DN 25 PN 63/100 EN 1092-1 Type B2
C A	DN 40 PN 16 EN 1092-1 Type A
C B	N 40 PN 25/40 EN 1092-1 Type A
C C	DN 40 PN 63/100 EN 1092-1 Type B2
D A	DN 50 PN 16 EN 1092-1 Type A
D B	DN 50 PN 25/40 EN 1092-1 Type A
D D	DN 50 PN 63 EN 1092-1 Type B2
D E	DN 50 PN 100 EN 1092-1 Type B2

Important:
Use the "A" dimension as the actuation length code. The "B" dimension must also be specified in quote/order.

Example:
For a 962 with an "A" dimension of 18" and a "B" dimension of 7", specify actuation length code 018.

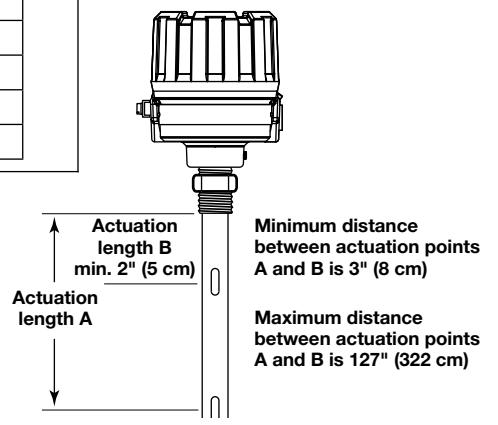

8 9 10 | **"A" DIMENSION ACTUATION LENGTH** (unit of length specified in second digit)

5" to 130" (120" max. for CPVC) in 1" increments 5" minimum for NPT process connections 6" minimum for BSP, and flanged process connections Example: 5 inches = 005
13 to 330 cm (305 cm max. for CPVC) in 1 cm increments 13 cm minimum for NPT process connections 15 cm minimum for BSP, and flanged process connections Example: 13 centimeters = 013

9		2	–				A	–			
1	2	3		4	5	6	7		8	9	10

AGENCY APPROVALS

AGENCY	APPROVED MODELS	PROTECTION METHOD	AREA CLASSIFICATION
FM	96X-X0A0-X10 96X-X0A0-X11 96X-X0A0-X12 96X-X0A0-X13 96X-X0A1-X10 96X-X0A1-X11 96X-XDA0-X30 96X-XDA0-X31 96X-XDA0-X32 96X-XDA0-X33 96X-XDA1-X30 96X-XDA1-X31 with transducers 9AX-XXXX-XXX or 9MX-XXXX-XXX	Explosion Proof Dust Ignition Proof	FM16US0214X, FM19CA0105X Class I, Div. 1,Groups B, C, & D Class II, Div. 1, Groups E, F, & G Class III, Type 4X, T6, SINGLE SEAL -40ºC ≤ Ta ≤+70ºC
	96X-XXAX-XXX with transducers 9AX-XXXX-XXX or 9MX-XXXX-XXX	Non-Incendive	FM16US0214X, FM19CA0105X Class I, Div. 2,Groups A, B, C, & D Class II, Div. 2, Groups E, F, & G Class III, Type 4X, T4, SINGLE SEAL -40ºC ≤ Ta ≤+70ºC
	96X-50AX-X1X with transducers 9AX-XXXX-XXX or 9MX-XXXX-XXX	Intrinsically Safe	FM16US0214X, FM19CA0105X Class I, Div. 1,Groups A, B, C, & D Class II, Div. 1, Groups E, F, & G Class III, Type 4X, T4, SINGLE SEAL -40ºC ≤ Ta ≤+70ºC
ATEX/IEC	96X-XXAX-XC0 96X-XXAX-XC1 96X-XXAX-XC2 96X-XXAX-XC3 with transducers 9XX-AXXX-XXX 9XX-NXXX-XXX 9XX-KXXX-XXX 9XX-MXXX-XXX 9XX-BXXX-XXX 9XX-CXXX-XXX	Flameproof	FM19ATEX0204X IECEx FMG 20.0020X FM21UKEX0126X Ⓔx II 1/2 G, Ex db IIC T6 Ga/Gb (ATEX) Ex db IIC T6 Ga/Gb (IEC) IP66 -40ºC ≤ Ta ≤+70ºC
	96X-50AX-XA0 96X-50AX-XA1 96X-50AX-XA2 96X-50AX-XA3 with transducers 9XX-AXXX-XXX 9XX-NXXX-XXX 9XX-KXXX-XXX 9XX-MXXX-XXX 9XX-SXXX-XXX 9XX-BXXX-XXX 9XX-CXXX-XXX	Intrinsically Safe	FM19ATEX0204X IECEx FMG 20.0020X FM21UKEX0126X Ⓔx II 1 G, Ex ia IIC T4 Ga (ATEX) EX ia IIC T4 Ga (IECEx) IP66 -40ºC ≤ Ta ≤+70ºC
INMETRO	Consult Factory for Approved Models	Explosion Proof Intrinsically Safe	BR-Ex d IIC T6 Gb IP66W BR-Ex ia IIC T5 Ga IP66W
CCOE	Consult Factory for Approved Models	Flameproof Intrinsically Safe	EEx d IIC T6 Ex ia IIC T5 Ga
KTL	9XX-XXX0-XX(0,1) 9XX-XXX0-XX(2,3) 9XX-XXX1-XX(0,1)	Flameproof	Ex d IIC T6/ 18-KA4BO-0589 Ex d IIC T6/ 18-KA4BO-0590 Ex d IIC T6/ 18-KA4BO-0591

CE These units have been tested to EN 61326 and are in compliance with the EMC Directive 2004/108/EC.

Specific Conditions of Use

1. The enclosure contains aluminum and is considered to present a potential risk of ignition by impact or friction. Care must be taken during installation and use to prevent impact or friction.
2. To maintain the T6 and/or T4 temperature code care shall be taken to ensure the “Enclosure Temperature” does not exceed 70°C.
3. The risk of electrostatic discharge shall be minimized at installation, following the direction given in the instructions.
4. Contact the original manufacturer for information in the dimensions of flameproof joints.
5. For Installation with ambient temperature of 70°C, refer to the manufacturer’s instructions for guidance on proper selection of conductors.
6. The Ultrasonic Probe is only for use with the Echotel Ultrasonic Switch.

QUALITY

The quality assurance system in place at AMETEK LMS guarantees the highest level of quality throughout the company. AMETEK LMS is committed to providing full customer satisfaction both in quality products and quality service.

The AMETEK LMS quality assurance system is registered to ISO 9001 affirming its commitment to known international quality standards providing the strongest assurance of product/service quality available.

WARRANTY



All AMETEK LMS electronic level and flow controls are warranted free of defects in materials or workmanship for eighteen months from the date of original factory shipment.

If returned within the warranty period; and, upon factory inspection of the control, the cause of the claim is determined to be covered under the warranty; then, AMETEK LMS will repair or replace the control at no cost to the purchaser (or owner) other than transportation.

AMETEK LMS shall not be liable for misapplication, labor claims, direct or consequential damage or expense arising from the installation or use of equipment. There are no other warranties expressed or implied, except special written warranties covering some AMETEK LMS products.

For additional information, see Instruction Manuals 51-646 and 51-650.

MAGNETROL® / AMETEK® LEVEL MEASUREMENT SOLUTIONS

ametek-measurement.com

705 Enterprise Street • Aurora, Illinois 60504-8149 USA
630.969.4000 • info.magnetrol@ametek.com

Copyright © 2024 AMETEK Magnetrol USA, LLC
Performance specifications are effective with date of issue and are subject to change without notice.

BULLETIN: 51-137.13
EFFECTIVE: March 2024
SUPERCEDES: April 2023