OPTIWAVE 6500 C Technical Datasheet

80 GHz Radar (FMCW) Level Transmitter for powders and dusty atmosphere

- Flush-mounted PEEK Lens antenna hence no intrusion into tank
- Extremely high dynamics for reliable measurement despite dusty conditions
- Easy installation due to small beam angles

© KROHNE 01/2021 - 4005813003 - TD OPTIWAVE 6500 R03 en

CONTENTS

1 Product features 3

1.1 The FMCW radar level transmitter for powders and dusty atmosphere ... 3
1.2 Applications ... 4
1.3 Product family ... 5
1.4 Measuring principle ... 9

2 Technical data 10

2.1 Technical data ... 10
2.2 Minimum power supply voltage ... 17
2.3 Measuring accuracy ... 17
2.4 Guidelines for maximum operating pressure ... 20
2.5 Dimensions and weights ... 22

3 Installation 30

3.1 Intended use ... 30
3.2 Pre-installation requirements ... 30
3.3 Installation ... 31
3.3.1 Pressure and temperature ranges ... 31
3.3.2 Recommended mounting position ... 32
3.3.3 Mounting restrictions ... 33
3.3.4 Process connections ... 34

4 Electrical connections 36

4.1 Electrical installation: output options with cable gland ... 36
4.2 Electrical installation: output options with an M12 male connector ... 36
4.3 Non-Ex devices ... 37
4.4 Devices for hazardous locations ... 37
4.5 Networks ... 38
4.5.1 General information ... 38
4.5.2 Point-to-point connection ... 38
4.5.3 Multi-drop networks ... 39

1.1 The FMCW radar level transmitter for powders and dusty atmosphere

This device is a non-contact radar level transmitter that uses FMCW technology. It measures distance, level and volume of powders, granulates and other solids. It is ideal for measuring the level of solids in applications with very dusty atmospheres.

① Aluminium or stainless-steel housing
② Large, backlit LCD screen with 4-button keypad can be used with a bar magnet without opening the housing cover. The software has a quick-setup assistant for easy commissioning. 12 languages are available.
③ 2-wire 80 GHz FMCW radar level transmitter
④ PEEK Lens antenna design

Highlights

- KROHNE is the pioneer of FMCW radar level measurement and has more than 30 years of experience with this technology
- 2-wire loop-powered 80 GHz transmitter – HART® 7
- Accuracy: ±2 mm / ±0.08¨
- PEEK Lens antenna options include:
  - DN70 / 2¾¨ antenna with 4° beam angle suitable for long nozzles and distances up to 100 m / 328 ft
  - DN40 / 1½¨ antenna with 8° beam angle, available with 1½¨ thread connections, measures up to 30 m / 98 ft
  - 112 mm / 4.4¨ antenna extension for long nozzles
- Antenna purging system for flange connection without antenna extension
- Extensive choice of process connections (threaded ≥1½¨ and flange ≥DN50 / 2¨)
- One user interface for all applications
- Empty tank spectrum function eliminates false reflections caused by tank internals
- Extensive choice of process connections (threaded ≥1½¨ and flange ≥DN50 / 2¨)
- Extremely high dynamics with considerable signal-to-noise ratio for clear vision in dusty atmospheres
- 4 GHz sweep for high resolution
- Low-cost low-pressure disc flange

- No need for antenna aiming kits. A slanted flange can be installed if necessary.

Industries

- Metals, Minerals & Mining
- Chemical market
- Power
- Agri-food
- Wastewater
- Pulp & Paper

Applications

- High and narrow silos
- Buffer silos
- Bulk storage containers or hoppers

1.2 Applications

1. Level measurement of solids

The level transmitter can measure the level of a wide range of solid products on a large variety of installations within the stated pressure and temperature range. It does not require any calibration: it is only necessary to do a short configuration procedure.

2. Mass (volume) measurement

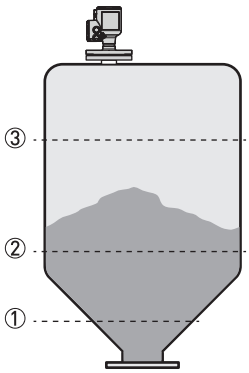

A strapping table function is available in the configuration menu for volume or mass measurement. Up to 50 mass (volume) values can be related to level values. For example:
Level ①= 2 m / Mass ①= e.g. 100 kg
Level ②= 10 m / Mass ②= e.g. 500 kg
Level ③= 20 m / Mass ③= e.g. 1000 kg

This data permits the device to calculate (by linear interpolation) volume or mass between strapping table entries.

PACTware™ software and a DTM (Device Type Manager) is supplied free of charge with the device. This software permits the user to easily configure the device with a computer. It has a conversion table function with a large number of tank shapes.

1.3 Product family

OPTIWAVE 1010 (6 GHz)
for liquids in bypass chambers

The OPTIWAVE 1010 is a non-contact FMCW radar welded to a bypass chamber with an optional IP68 level indicator (BM 26 Advanced). It continuously measures the distance and level of clean liquids.

It measures in bypass chambers up to 8 m / 26.2 ft high with a maximum accuracy of ±5 mm / ±0.2¨. It can measure in process conditions with temperatures up to +150°C / +302°F and pressures up to 40 barg / 580 psig.

OPTIWAVE 5200 C/F (10 GHz)
for liquids in storage and process applications

This 10 GHz 2-wire FMCW radar level transmitter measures distance, level, volume, mass and flow rate of liquids and pastes. It is ideal for corrosive products with its PP or PTFE antenna options. It features unique PP and PTFE antennas for aggressive products. The device is able to measure distances up 30 m / 98.4 ft in process conditions up to +250°C / +482°F and 40 barg / 580 psig.

The device agrees with SIL2 requirements for safety-related systems (as per IEC 61508). Output options include HART®, FOUNDATION™ fieldbus and PROFIBUS PA industrial communication protocols.

OPTIWAVE 5400 C (24 GHz)
for liquids in basic process applications

Designed for basic liquid applications, this market entry 24 GHz 2-wire FMCW radar transmitter provides accurate readings even in fast moving processes, in closed tanks or in the open air like rivers or dams. Its proven PP Drop antenna is insensitive to condensation.

The OPTIWAVE 5400 can measure in process conditions with temperatures up to +130°C / +266°F and pressures up to 16 barg / 232 psig. The antenna options permit to measure distances up to 100 m / 328 ft. The device can be installed in high nozzles (≤1 m / 3.28 ft) when it is fitted with antenna extensions.

OPTIWAVE 7400 C (24 GHz)
for agitated and corrosive liquids

This 24 GHz FMCW radar level transmitter is designed for liquids in harsh environment like tanks with agitators containing corrosives or in non-Ex applications with extremely high process temperatures, like molten salt in solar plants (+700°C / +1292°F). For toxic and dangerous products, the use of a Metaglas® second sealing barrier is recommended.

The PTFE and PEEK Drop antennas have optional flange plate protection for corrosive media. Heating and cooling systems prevent from crystallization inside the Metallic Horn antennas. The device measures distances up to 100 m / 328 ft and can be installed in high nozzles (≤1 m / 3.28 ft) when fitted with antenna extensions. Standard process conditions up to +200°C / 392°F; 100 barg / 1450 psig (higher on request).

OPTIWAVE 7500 C (80 GHz)
for liquids in narrow tanks with internal obstructions

The small beam angle and negligible dead zone of this 80 GHz FMCW radar level transmitter makes it the premium choice for liquids in small and narrow tanks with internal obstructions like agitators or heating coils, as well as tanks with long nozzles. It can even measure through tank roofs made of non-conductive material (e.g. plastic, fiberglass or glass). The flush-mounted PEEK Lens antenna (no tank intrusion) is insensitive to deposit.

There is an extensive choice of process connections starting from ¾". Flanges have an optional PEEK plate protection for corrosive tank contents. The OPTIWAVE 7500 operates in process conditions with temperatures up to +150°C / +302°F and pressures up to 40 barg / 580 psig. It measures distances up to 100 m / 328 ft and a 112 mm / 4.4" extension is available for high nozzles.

OPTIWAVE 3500 C (80 GHz)
for liquids with hygienic requirements

This 80 GHz FMCW radar transmitter for hygienic liquid applications in the pharmaceutical, food and beverage industries is CIP-SIP suitable and offers a large choice of hygienic process connections: Tri-Clamp®, Tuchenhagen VARIVENT®, SMS, DIN 11851, DIN 11864-1 Form A, NEUMO BioControl®.

The small dead zone and beam angle of its flush-mounted Lens antenna enables precise measurement even in small and narrow tanks with agitators. The OPTIWAVE 3500 measures up to 50 m / 164 ft in process conditions up to +150°C / +302°F and 25 barg / 363 psig.

OPTIWAVE 6400 C (24 GHz)
for solids from granulates to rocks

By combining high signal dynamics and FMCW radar technology, this market-entry 24 GHz radar device measures accurately and reliably the level of solids like stone, plastic granulates or coffee beans. No need for expensive antenna aiming kits or purging systems; the proven Drop antenna design minimizes scaling and is not affected by the angle of repose.

It operates in process conditions with temperatures up to +130°C / +266°F and pressures up to 16 barg / 232 psig. The antenna options permit the device to measure distances up to 100 m / 328 ft.

OPTIWAVE 6500 C (80 GHz)
for powders and dusty atmosphere

Accurate continuous level measurement of fine powders has to deal with a series of issues like dust, low-reflective media, build-up and uneven surfaces. The specific algorithms and high signal dynamics of this 80 GHz FMCW radar transmitter are the key to provide reliable and accurate readings despite these difficult conditions. Thanks to the small beam angle of the flush-mounted Lens antenna, this powerful device handles high and narrow silos even in the presence of internal obstructions.

The OPTIWAVE 6500 operates in process conditions with temperatures up to +200°C / +392°F and pressures up to 40 barg / 580 psig. It offers an extensive choice of threaded (≥1½¨) and flanged (≥DN50 / 2¨) process connections. The antenna options permit the device to measure distances up to 100 m / 328 ft. A 112 mm / 4.4¨ extension is available for high nozzles.

1.4 Measuring principle

A radar signal is emitted via an antenna, reflected from the product surface and received after a time t. The radar principle used is FMCW (Frequency Modulated Continuous Wave).

The FMCW-radar transmits a high frequency signal whose frequency increases linearly during the measurement phase (called the frequency sweep). The signal is emitted, reflected on the measuring surface and received with a time delay, t. Delay time, t=2d/c, where d is the distance to the product surface and c is the speed of light in the gas above the product.

For further signal processing the difference Δf is calculated from the actual transmitted frequency and the received frequency. The difference is directly proportional to the distance. A large frequency difference corresponds to a large distance and vice versa. The frequency difference Δf is transformed via a Fast Fourier Transform (FFT) into a frequency spectrum and then the distance is calculated from the spectrum. The level results from the difference between the tank height and the measured distance.

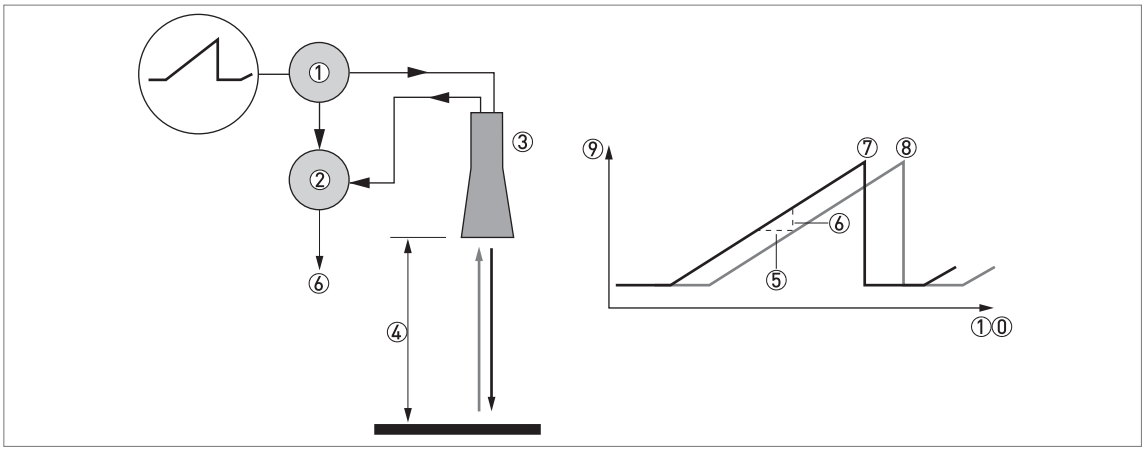

Figure 1-1: Measuring principle of FMCW radar

① Transmitter
② Mixer
③ Antenna
④ Distance to product surface, where change in frequency is proportional to distance
⑤ Differential time delay, Δt
⑥ Differential frequency, Δf
⑦ Frequency transmitted
⑧ Frequency received
⑨ Frequency
①⓪ Time

Measurement modes

"Direct" mode
The device uses the largest radar signal to monitor level.

"Direct Plus" mode
If it is possible there will be an interference signal in the measurement zone that is larger than the level signal, select "Direct Plus" mode. If you select "Direct Plus" mode, the device locks on the level signal and monitors changes in level. If the device then finds larger reflections in the silo, it will only monitor the largest signal in a small search zone around the first reflection found and ignore all other reflections. The interference signal must not be near to the level signal.

2.1 Technical data

- *The following data is provided for general applications. If you require data that is more relevant to your specific application, please contact us or your local sales office.*
- *Additional information (certificates, special tools, software,...) and complete product documentation can be downloaded free of charge from the website (Downloadcenter).*

Measuring system

Measuring principle	2-wire loop-powered level transmitter; FMCW radar
Frequency range	W-band (78...82 GHz)
Max. radiated power (EIRP)	< -41.3 dBm according to ETSI EN 302 372 (TLPR) and ETSI EN 302 729 (LPR)
Application range	Level measurement of powders and granulates
Primary measured value	Distance and reflection
Secondary measured value	Level, volume and mass

Design

Construction	The measurement system consists of a measuring sensor (antenna) and a signal converter
Options	Integrated LCD display (-20..+70°C / -4...+158°F); if the ambient temperature is not in these limits, then this condition can stop the display
	Distance piece (for process temperature: +150...+200°C / +302...+392°F)
	Antenna purging system (supplied with a G 1/4 connection)
	Weather protection
Max. measuring range	Lens, DN40 (1½"): 30 m / 98 ft
	Lens, DN70 (3"): 100 m / 328.1 ft
	Refer also to "Measuring accuracy" on page 17
Min. tank height	1 m / 40"
Recommended minimum blocking distance	0.3 m / 12" (add 112 mm / 4.4" if the DN40 Lens antenna has an antenna extension)
Min. distance for reflection measurement	1 m / 3.3 ft
Beam angle (antenna)	Lens, DN40 (1½"): 8°
	Lens, DN70 (3"): 4°
Display and user interface	
Display	Backlit LCD display
	128 × 64 pixels in 64-step greyscale with 4-button keypad
Interface languages	English, French, German, Italian, Spanish, Portuguese, Chinese (simplified), Japanese, Russian, Czech, Polish and Turkish

Measuring accuracy

Resolution	1 mm / 0.04¨
Repeatability	±1 mm / ±0.04¨
Accuracy	±2 mm / ±0.08¨, when distance ≤ 10 m / 33 ft
	±0.02% of measured distance, when distance > 10 m / 33 ft. For more data, refer to the "Measuring accuracy" section in this chapter. If the maximum measuring range is more than 37 m / 121 ft, we recommend that the device has a calibration certificate option. ①
Digital temperature drift	Max. ±10 mm / ±0.39¨ for the full temperature range
Reference conditions acc. to EN 61298-1	
Temperature	+15...+25°C / +59...+77°F
Pressure	1013 mbara ±50 mbar / 14.69 psia ±0.73 psi
Relative air humidity	60% ±15%
Target	Metal plate in an anechoic chamber. The device has specified settings.

Operating conditions

Temperature	
Ambient temperature	-40…+80°C / -40…+176°F Ex: see supplementary operating instructions or approval certificates
Relative humidity	0...99%
Storage temperature	-40…+85°C / -40…+185°F
Process connection temperature (higher temperature on request)	-50…+150°C / -58…+302°F The process connection temperature must agree with the temperature limits of the gasket material. Refer to "Materials" in this table.) Ex: see supplementary operating instructions or approval certificates
Pressure	
Process pressure	-1…40 barg / -14.5…580 psig
	Subject to the process connection used and the process connection temperature. For more data, refer to *Guidelines for maximum operating pressure* on page 20.
Other conditions	
Dielectric constant (ε_r)	≥1.4
Ingress protection	IEC 60529: IP66 / IP68 (0.1 barg / 1.45 psig)
	NEMA 250: NEMA type 4X - 6 (housing) and type 6P (antenna)
Maximum rate of change	60 m/min / 196 ft/min

Installation conditions

Process connection size	The nominal diameter (DN) should be equal to or larger than the antenna diameter.
Process connection position	Make sure that there are not any obstructions directly below the process connection for the device. For more data, refer to *Installation* on page 30.
Dimensions and weights	For dimensions and weights data, refer to *Dimensions and weights* on page 22.

Materials

Housing	Standard: Polyester-coated aluminium
	Option: Stainless steel (1.4404 / 316L)
Wetted parts, including antenna	PEEK – this material agrees with FDA regulations
Process connection	Stainless steel (1.4404 / 316L)
Slanted flange (option)	PTFE (≤ +150°C / +302°F); PEEK (> +150°C / +302°F)
Gaskets	FKM/FPM (-40…+150°C / -40…+302°F); EPDM (-50°C…+150°C / -58…+302°F)
Cable gland	Standard: none
	Options: Plastic (Non-Ex: black, Ex i-approved: blue); nickel-plated brass; stainless steel; M12 (4-pin connector)
Weather protection (Option)	Stainless steel (1.4404 / 316L)

Process connections

DN40 (1½") Lens antenna	
Thread	G 1½ A (ISO 228); 1½ NPT (ASME B1.20.1)
Flange, EN 1092-1	Low-pressure flanges: DN50...200 in PN01; Standard flanges: DN50 in PN40; DN80...200 in PN10, PN16 and PN40 (Type B1); others on request Optional flange facing: Type A ②
Flange, ASME B16.5	Low-pressure flanges: NPS 2...8 in Class 150 (max. 15 psig); Standard flanges: NPS 2…8 in Class 150 RF and Class 300 RF; others on request Optional flange facing: FF (Flat Face) ③
DN70 (3") Lens antenna	
Thread	G3 A (ISO 228); 3 NPT (ASME B1.20.1)
Flange, EN 1092-1	Low-pressure flanges: DN80...200 in PN01; Standard flanges: DN80...200 in PN10, PN16 and PN40 (Type B1); others on request Optional flange facing for standard flanges: Type A ④
Flange, ASME B16.5	Low-pressure flanges: NPS 3...8 in Class 150 (max. 15 psig); Standard flanges: NPS 3…8 in Class 150 RF and Class 300 RF; others on request Optional flange facing for standard flanges: FF (Flat Face) ③

Electrical connections

Power supply	**Terminals output – Non-Ex / Ex i:** 12…30 V DC; min./max. value for an output of 21.5 mA at the terminals
	Terminals output – Ex d: 16…36 V DC; min./max. value for an output of 21.5 mA at the terminals
Maximum current	21.5 mA

Current output load	**Non-Ex / Ex i:** R_L [Ω] ≤ ((U_{ext} -12 V)/21.5 mA). For more data, refer to *Minimum power supply voltage* on page 17.
	Ex d: R_L [Ω] ≤ ((U_{ext} -16 V)/21.5 mA). For more data, refer to *Minimum power supply voltage* on page 17.
Cable entry	Standard: M20×1.5; Options: ½ NPT; 4-pin male M12 connector
Cable gland	Standard: none
	Options: M20×1.5 (cable diameter: 7…12 mm / 0.28…0.47¨); others are available on request
Cable entry capacity (terminal)	0.5…3.31 mm² (AWG 20...12)

Input and output

Current output	
Output signal	Standard: 4…20 mA
	Options: 3.8…20.5 mA acc. to NAMUR NE 43; 4…20 mA (reversed); 3.8…20.5 mA (reversed) acc. to NAMUR NE 43
Output type	Passive
Resolution	±1 µA
Temperature drift	Typically 50 ppm/K
Error signal	High: 21.5 mA; Low: 3.5 mA acc. to NAMUR NE 43
HART®	
Description	Digital signal transmitted with the current output signal (HART® protocol)
Version	7.4
Load	≥ 250 Ω
Digital temperature drift	Max. ±15 mm / 0.6¨ for the full temperature range
Multi-drop operation	Yes. Current output = 4 mA. Enter Program mode to change the polling address (1...63).
Available drivers	FC475, AMS, PDM, FDT/DTM
PROFIBUS PA	
Type	PROFIBUS MBP interface that agrees with IEC 61158-2 with 31.25 kbit/s; voltage mode (MBP = Manchester-Coded, Bus-Powered)
Function blocks	1 × Transducer Block Level (TB-Level), 1 × Physical Block (PB), 4 × Analog Input Block (AI), 1 × Totalizer Function Block (TOT)
Device power supply	9...32 V DC – bus powered; no additional power supply required
Polarity sensitivity	No
Basic current	18 mA

FOUNDATION™ fieldbus	
Physical layer	FOUNDATION™ fieldbus protocol that agrees with IEC 61158-2 and FISCO model; galvanically isolated
Communication standard	H1
ITK version	6.3
Function blocks	1 × Enhanced Resource Block (RB), 1 × Customer Level Transducer Block (LEVELTB), 1 × Customer Converter Transducer Block (CONVTB), 1 × Customer Diagnosis Transducer Block (DIAGTB), 4 × Analog Input Block (AI), 1 × Digital Input (DI), 1 × Integrator Block (IT), 1 × Proportional Integral Derivate Block (PID), 1 × Arithmetic Block (AR)
	Analog Input Block: 10 ms
	Digital Input Block: 20 ms
	Integrator Block: 15 ms
	Proportional Integral Derivate Block: 25 ms
Device power supply	Not intrinsically safe: 9...32 V DC
	Intrinsically safe: 9...24 V DC
Basic current	18 mA
Maximum error current FDE	25.5 mA (= basic current + error current = 18 mA + 7.5 mA)
Polarity sensitivity	No
Minimum cycle time	250 ms
Output data	Level, distance, volume, ullage volume, mass, ullage mass
Input data	None
Link Active Scheduler	Supported
NAMUR NE 107 data	Supported with FF field diagnosis (FF-891)

Approvals and certification

CE	The device meets the essential requirements of the EU Directives. The manufacturer certifies successful testing of the product by applying the CE marking.
	For more data about the EU Directives and European Standards related to this device, refer to the EU Declaration of Conformity. You can download this document free of charge from the website (Download Center).
Vibration resistance	EN 60721-4-4 (class 4M4 / 5... 8.5 Hz: ±3.5 mm / 8.5...200 Hz: 1g, 15g shock ½ sinus: 6ms); EN 61298-3 (10... 58 Hz: ±0.15 mm / 58....1000 Hz: 2g)
Explosion protection	
ATEX (EU Type Approval)	II 1/2 G Ex ia IIC T6...T3 Ga/Gb;
	II 1/2 D Ex ia IIIC T85°C...T*°C Da/Db; ⑤
	II 1/2 G Ex db ia IIC T6...T3 Ga/Gb;
	II 1/2 D Ex ia tb IIIC T85°C...T*°C Da/Db ⑤
ATEX (Type Approval)	II 3 G Ex ic IIC T6...T3 Gc;
	II 3 D Ex ic IIIC T85°C...T*°C Dc ⑤

IECEx	Ex ia IIC T6...T3 Ga/Gb;
	Ex ia IIIC T85°C...T*°C Da/Db; ⑤
	Ex db ia IIC T6...T3 Ga/Gb;
	Ex ia tb IIIC T85°C...T*°C Da/Db; ⑤
	Ex ic IIC T6...T3 Gc;
	Ex ic IIIC T85°C...T*°C Dc ⑤
cQPSus	**Division ratings**
	XP-IS, Class I, Div 1, GPS ABCD, T6...T3;
	DIP, Class II/III, Div 1, GPS EFG, T85°C...T*°C; ⑤
	IS, Class I, Div 1, GPS ABCD, T6...T3;
	IS, Class II/III, Div 1, GPS EFG, T85°C...T*°C; ⑤
	NI, Class I, Div 2, GPS ABCD, T6...T3;
	NI, Class II/III, Div 2, GPS FG, T85°C...T*°C ⑤
	Zone ratings
	Class I, Zone 1, AEx db ia [ia Ga] IIC T6...T3 Gb (US) – antenna suitable for Zone 0; Ex db ia [ia Ga] IIC T6...T3 Gb (Canada) – antenna suitable for Zone 0;
	Class I, Zone 0, AEx ia IIC T6...T3 Ga (US); Ex ia IIC T6...T3 Ga (Canada);
	Zone 20, AEx ia IIIC T85°C...T*°C Da (US); Ex ia IIIC T85°C...T*°C Da (Canada); ⑤
	Zone 21, AEx ia tb [ia Da] IIIC T85°C...T*°C Db (US) – antenna suitable for zone 20 Ex ia tb [ia Da] IIIC T85°C...T*°C Db (Canada) – antenna suitable for zone 20 ⑤
NEPSI	Ex ia IIC T3~T6 Ga/Gb;
	Ex d ia IIC T3~T6 Ga/Gb;
	Ex iaD 20/21 T85...T*; ⑤
	Ex iaD 20/21 tD A21 IP6X T85°C...T*°C ⑤
EAC-EX	Ga/Gb Ex ia IIC T6...T3 X;
	Da/Db Ex ia IIIC T85°C...T*°C X; ⑤
	Ga/Gb Ex db ia IIC T6...T3 X;
	Da/Db Ex ia tb IIIC T85°C...T*°C X ⑤
Other standards and approvals	
SIL	SIL2/3 (SIL3: 1oo2 architecture is necessary for homogeneous redundancy) – certified according to all the requirements in EN 61508 (Full Assessment) and for high/low continuous demand mode operation. HFT=0, SFF=94.21% (for non-Ex / Ex i devices) or 94.50% (for Ex d devices), type B device
Electromagnetic compatibility	**EU**: Electromagnetic Compatibility directive (EMC) SIL2-approved devices agree with EN 61326-3-1 and EN 61326-3-2
Radio approvals	**EU**: Radio Equipment directive (RED)
	FCC Rules: Part 15
	Industry Canada: RSS-211

Electrical safety	**EU**: Agrees with the safety part of the Low Voltage directive (LVD)
	USA and Canada: Agrees with NEC and CEC requirements for installation in ordinary locations
NAMUR	NAMUR NE 21 Electromagnetic Compatibility (EMC) of Industrial Process and Laboratory Control Equipment
	NAMUR NE 43 Standardization of the Signal Level for the Failure Information of Digital Transmitters
	NAMUR NE 53 Software and Hardware of Field Devices and Signal Processing Devices with Digital Electronics
	NAMUR NE 107 Self-Monitoring and Diagnosis of Field Devices
CRN	This certification is applicable for all Canadian provinces and territories. For more data, refer to the website.
Construction code	Option: ASME B31.3

Table 2-1: Technical data

① It is also possible that there will be a small difference between the accuracy specified under reference conditions and the accuracy of the device on site if the surface of the solid measured is not flat.
② The DN200 PN01 low-pressure flange (EN 1092-1) option is not compatible with a 200A 0K flange (JIS B2220)
③ NPS = National Pipe Size. For more data about the dimensions of ASME flanges, refer to the ASME B16.5 standard.
④ The DN200 PN01 low-pressure flange (EN 1092-1) option is not compatible with a 200A 10K flange (JIS B2220)
⑤ T* = 150 or 200. For more data, refer to the related Ex approval certificate.

Process connection options: flange facing finish

Type (flange facing)	Flange facing finish, R_a (min...max)	
	[µm Rz]	[µin – AARH]
EN 1092-1		
B1	3.2…12.5	125…500
ASME B16.5		
RF or FF	3.2...6.3	125...250
JIS B2220		
RF	3.2...6.3	125...250

Table 2-2: Process connection options: flange facing finish

2.2 Minimum power supply voltage

Use these graphs to find the minimum power supply voltage for a given current output load.

Non-Ex and Hazardous Location approved (Ex i / IS) devices

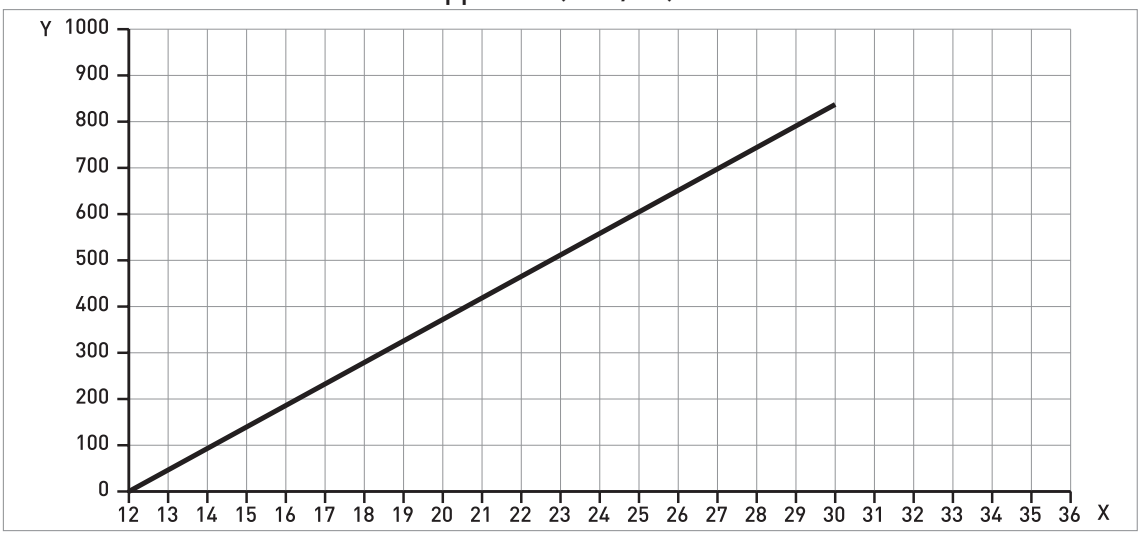

Figure 2-1: Minimum power supply voltage for an output of 21.5 mA at the terminals (Non-Ex and Hazardous Location approval (Ex i / IS))

X: Power supply U [V DC]
Y: Current output load R_L [Ω]

Hazardous Location (Ex d / XP/NI) approved devices

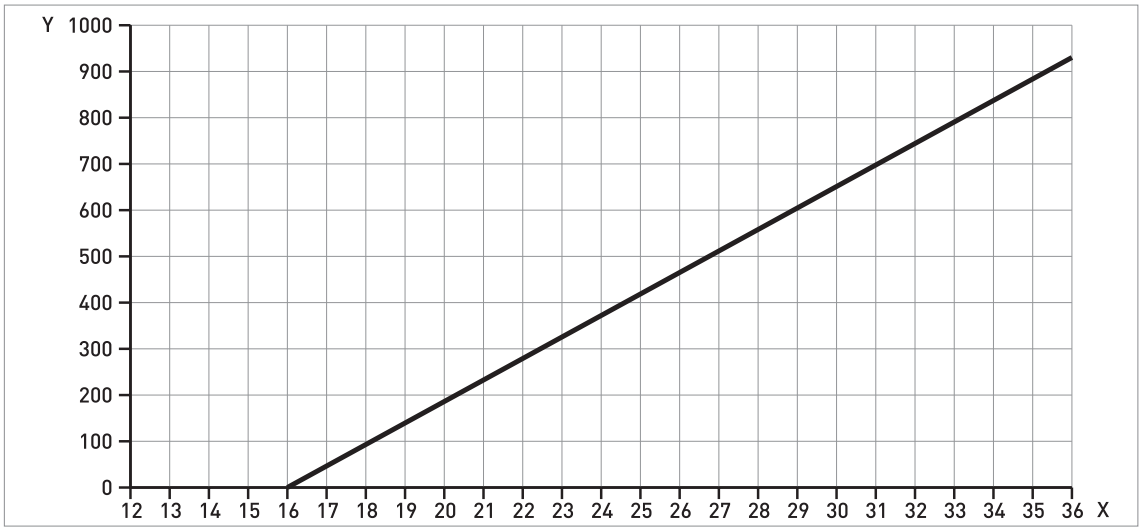

Figure 2-2: Minimum power supply voltage for an output of 21.5 mA at the terminals (Hazardous Location approval (Ex d / XP/NI))

X: Power supply U [V DC]
Y: Current output load R_L [Ω]

2.3 Measuring accuracy

Use these graphs to find the measuring accuracy for a given distance from the transmitter.

DN40 (1½") Lens antenna

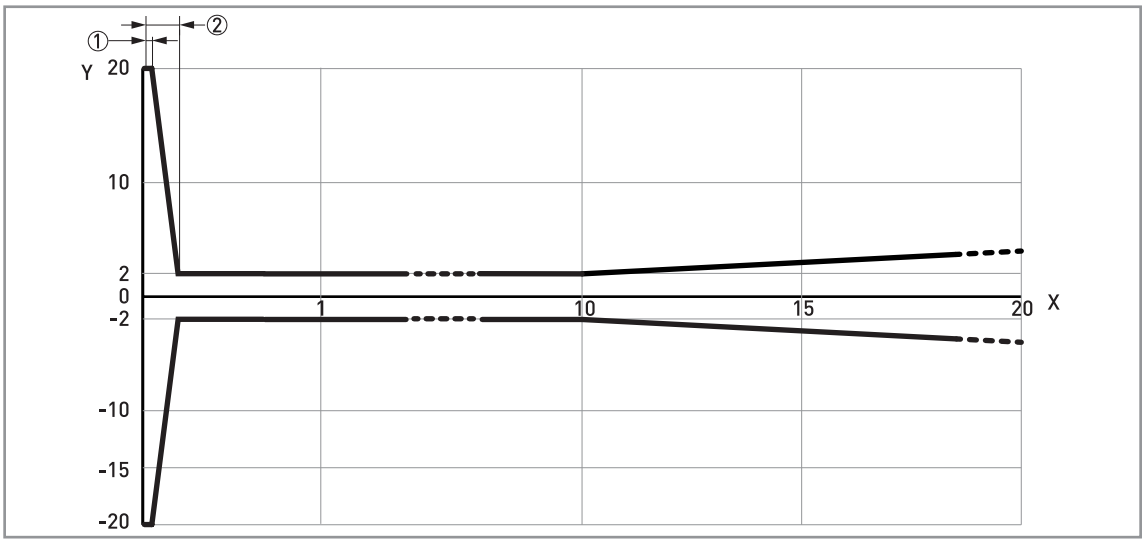

Figure 2-3: DN40 (1½") Lens antenna: measuring accuracy (graph of measuring accuracy in mm against measuring distance in m)

X: Measuring distance from the thread stop or flange facing of the process connection [m]
Y: Measuring accuracy [+yy mm / -yy mm]
① 50 mm
② 200 mm

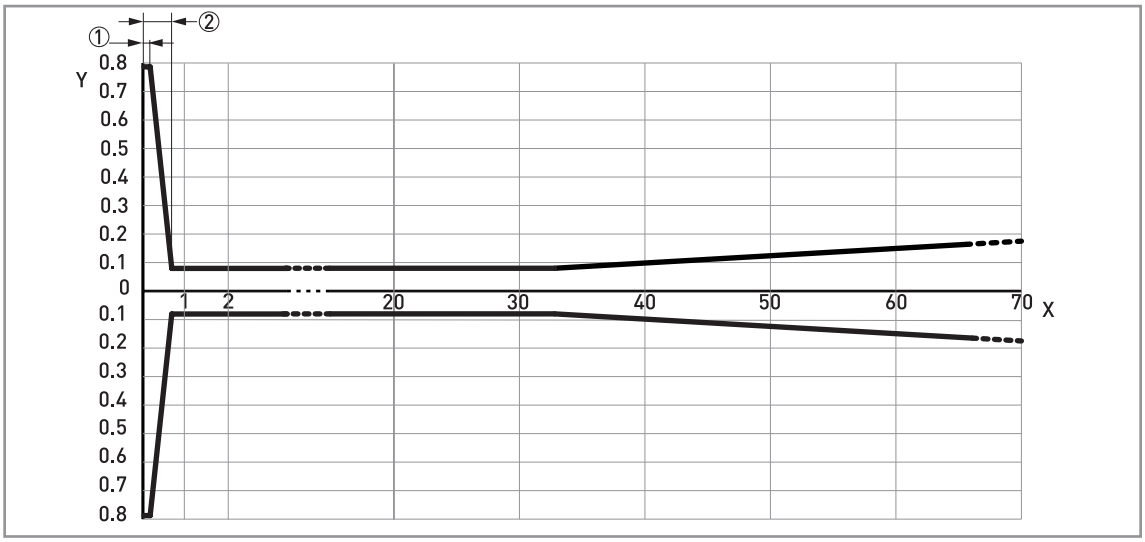

Figure 2-4: DN40 (1½") Lens antenna: measuring accuracy (graph of measuring accuracy in inches against measuring distance in ft)

X: Measuring distance from the thread stop or flange facing of the process connection [ft]
Y: Measuring accuracy [+yy inches / -yy inches]
① 1.97"
② 7.87"

To calculate the accuracy at a given distance from the antenna, refer to Technical data on page 10 (measuring accuracy).

DN70 (3¨) Lens antenna

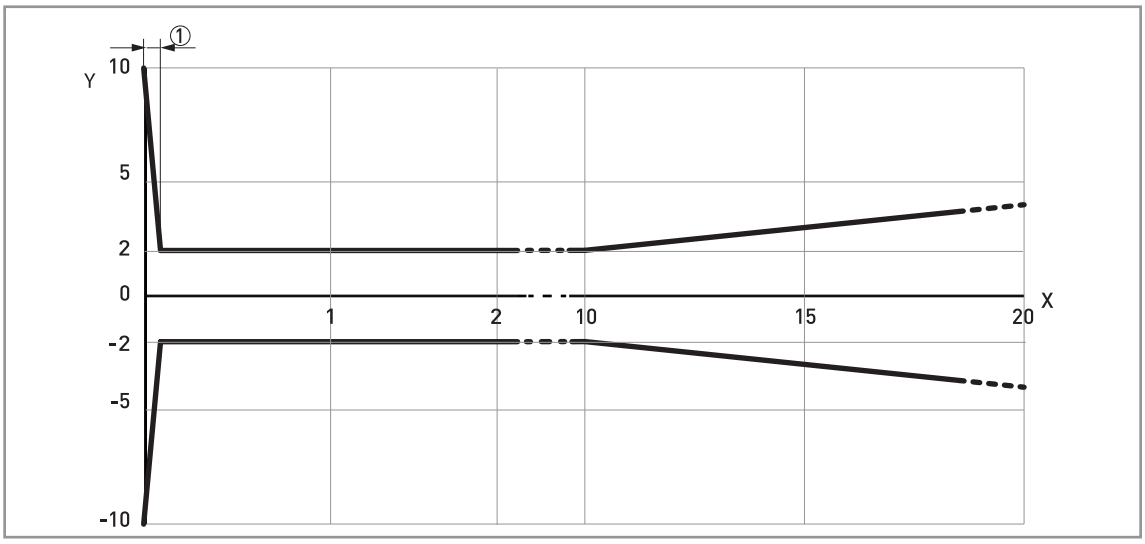

Figure 2-5: DN70 (3¨) Lens antenna: measuring accuracy (graph of measuring accuracy in mm against measuring distance in m)

X: Measuring distance from the thread stop or flange facing of the process connection [m]
Y: Measuring accuracy [+yy mm / -yy mm]
① 100 mm

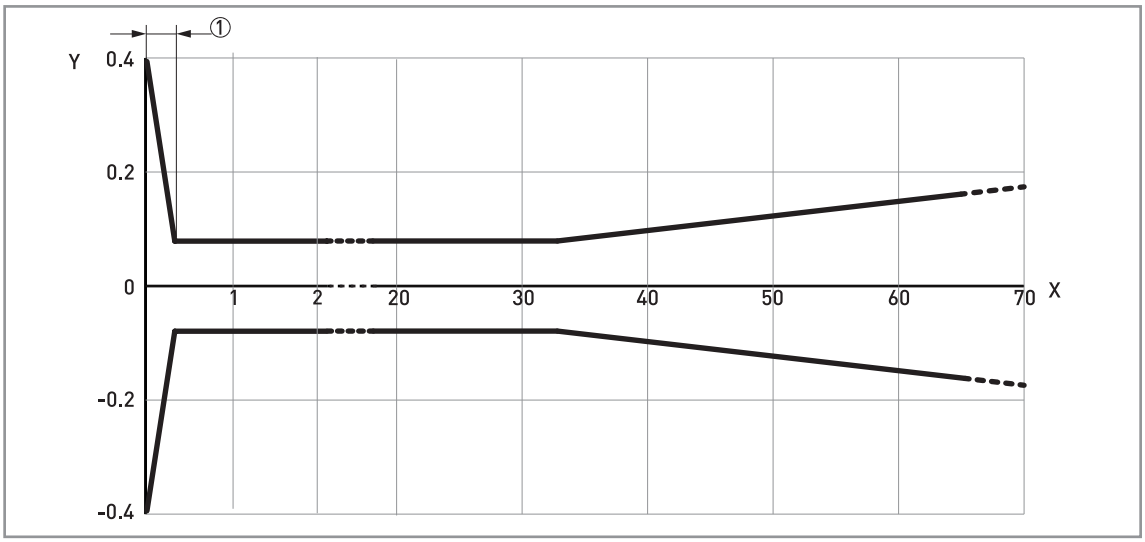

Figure 2-6: DN70 (3¨) Lens antenna: measuring accuracy (graph of measuring accuracy in inches against measuring distance in ft)

X: Measuring distance from the thread stop or flange facing of the process connection [ft]
Y: Measuring accuracy [+yy inches / -yy inches]
① 3.94¨

To calculate the accuracy at a given distance from the antenna, refer to Technical data on page 10 (measuring accuracy).

2.4 Guidelines for maximum operating pressure

Make sure that the devices are used within their operating limits.

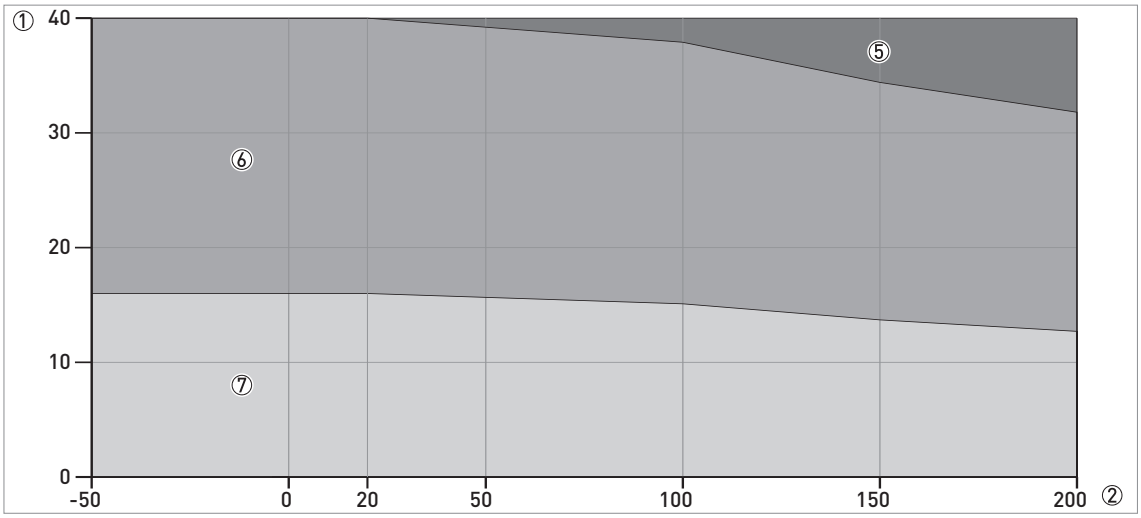

Figure 2-7: Pressure / temperature de-rating (EN 1092-1), flange and threaded connection, in °C and barg

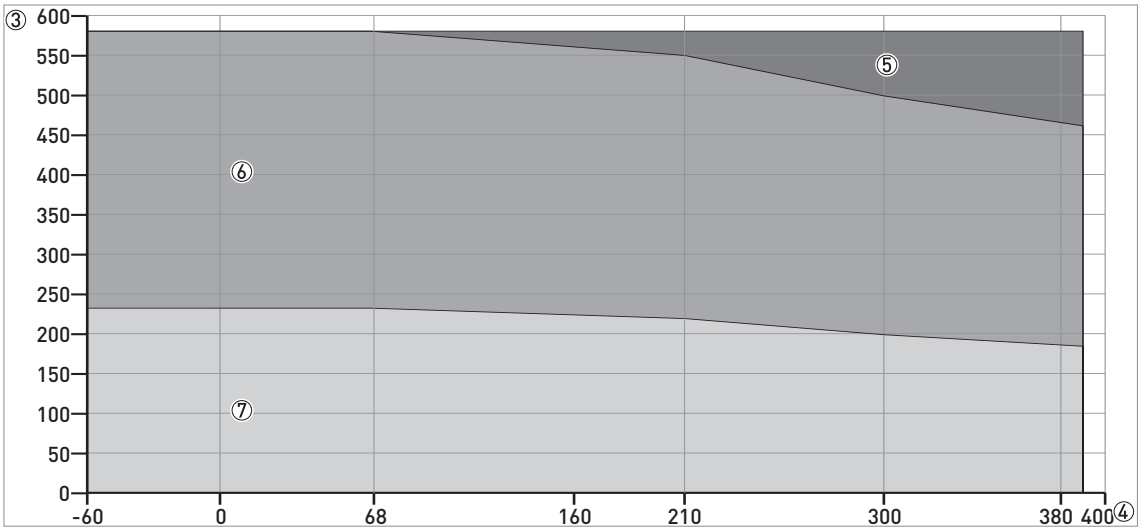

Figure 2-8: Pressure / temperature de-rating (EN 1092-1), flange and threaded connections, in °F and psig

① Process pressure, p [barg]
② Process connection temperature, T [°C]
③ Process pressure, p [psig]
④ Process connection temperature, T [°F]
⑤ Threaded connection, G (ISO 228-1)
⑥ Flange connection, PN40
⑦ Flange connection, PN16

CRN certification

There is a CRN certification option for devices with process connections that agree with ASME standards. This certification is necessary for all devices that are installed on a pressure vessel and used in Canada.

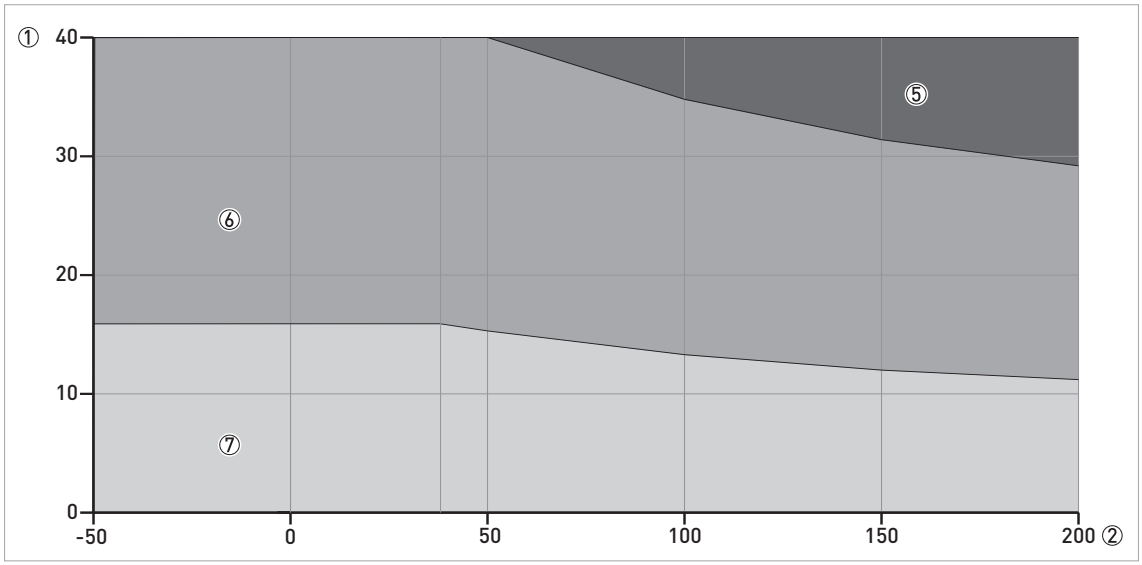

Figure 2-9: Pressure / temperature de-rating (ASME B16.5), flange and threaded connections, in °C and barg

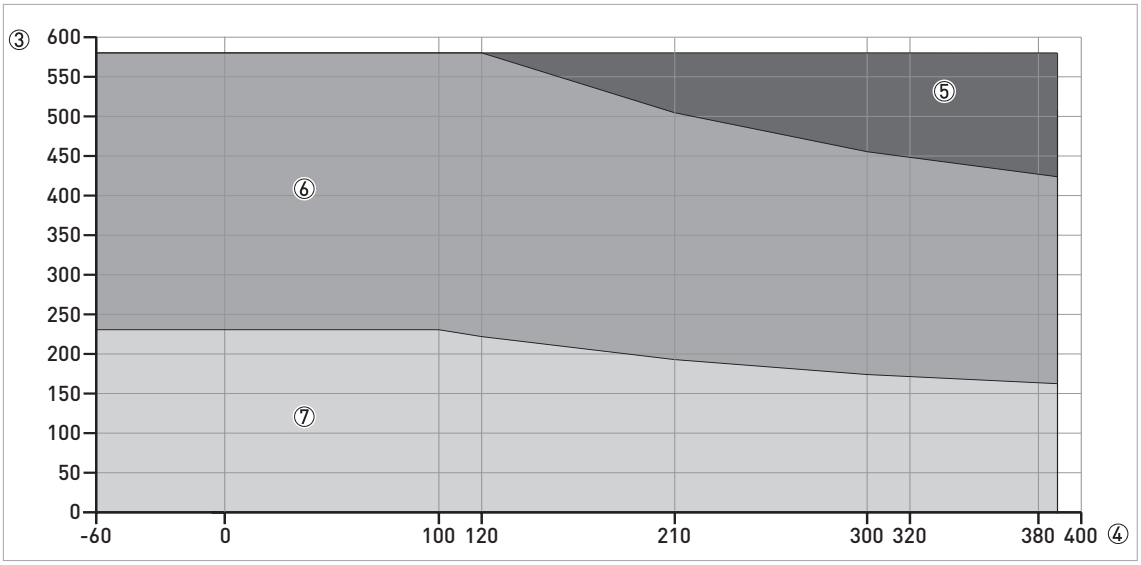

Figure 2-10: Pressure / temperature de-rating (ASME B16.5), flange and threaded connections, in °F and psig

① Process pressure, p [barg]
② Process connection temperature, T [°C]
③ Process pressure, p [psig]
④ Process connection temperature, T [°F]
⑤ Threaded connection, NPT (ASME B1.20.1)
⑥ Flange connection, Class 300
⑦ Flange connection, Class 150

2.5 Dimensions and weights

DN40 / 1½¨ Lens antenna versions

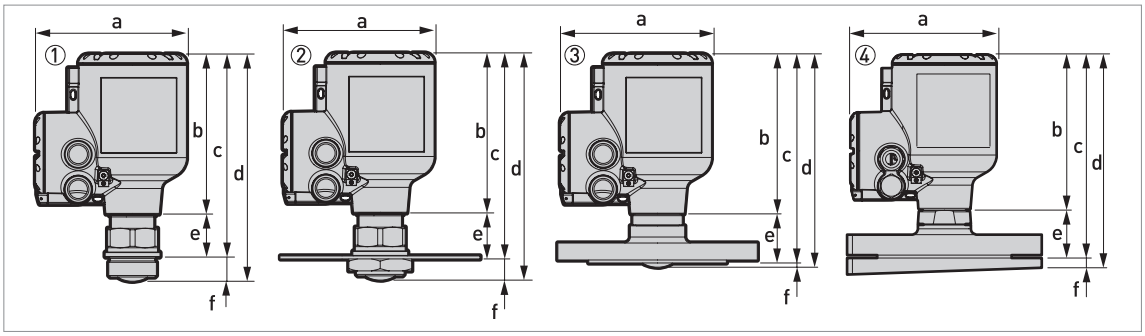

Figure 2-11: DN40 / 1½¨ Lens antenna versions

① DN40 / 1½¨ Lens antenna with a G 1½A or 1½ NPT threaded connection
② DN40 / 1½¨ Lens antenna with a low-pressure flange attached to a threaded connection
③ DN40 / 1½¨ Lens antenna with a flange connection
④ DN40 / 1½¨ Lens antenna with a flange connection and the 2° slanted flange option

- *The diameter of the outer sheath of the cable must be 7... 12 mm or 0.28... 0.47¨.*
- *Cable glands for cQPSus-approved devices must be supplied by the customer.*
- *A weather protection cover is available as an accessory with all devices.*

DN40 / 1½¨ Lens antenna: Dimensions in mm

Type of process connection	Dimensions [mm]					
	a	b	c	d	e	f
Thread connection	151	160	203.5 ①	228 ①	29.5 ①	24.2
Low-pressure flange connection	151	160	206.5 ①	228 ①	32.2 ①	21.2
Flange connection	151	160	209.5 ①	214 ②	49.2 ①	4.2 ③
Flange connection with slanted flange option	151	160	209.6 ①	219.6 ①	49.2 ①	10

Table 2-3: DN40 / 1½¨ Lens antenna: Dimensions in mm

① If the process temperature is more than +150°C, add 112 mm to this value
② If the process temperature is more than +150°C, add 112 mm to this value. If the device has the antenna extension option, add 112 mm to this value.
③ If the device has the antenna extension option, add 112 mm to this value

DN40 / 1½¨ Lens antenna: Dimensions in inches

Type of process connection	Dimensions [inches]					
	a	b	c	d	e	f
Thread connection	5.94	6.30	8.01 ①	8.98 ①	1.16 ①	0.95
Low-pressure flange connection	5.94	6.30	8.13 ①	8.98 ①	1.27 ①	0.83
Flange connection	5.94	6.30	8.25 ①	8.42 ②	1.94 ①	0.17 ③
Flange connection with slanted flange option	5.94	6.30	8.25 ①	8.65 ①	1.94 ①	0.39

Table 2-4: DN40 / 1½¨ Lens antenna: Dimensions in inches

① If the process temperature is more than +302°F, add 4.41¨ to this value
② If the process temperature is more than +302°F, add 4.41¨ to this value. If the device has the antenna extension option, add 4.41¨ to this value.
③ If the device has the antenna extension option, add 4.41¨ to this value

DN70 / 3¨ Lens antenna versions

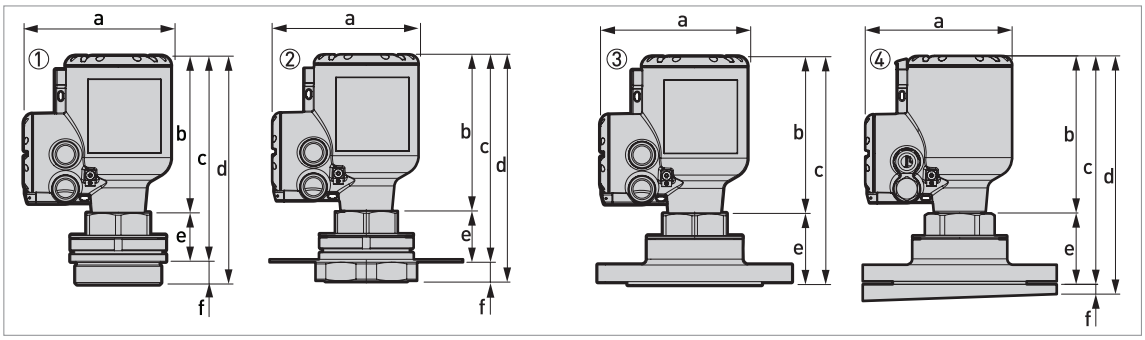

Figure 2-12: DN70 / 3¨ Lens antenna versions

① DN70 / 3¨ Lens antenna with a G 3A or 3 NPT threaded connection
② DN70 / 3¨ Lens antenna with a low-pressure flange attached to a threaded connection
③ DN70 / 3¨ Lens antenna with a flange connection
④ DN70 / 3¨ Lens antenna with a flange connection and the 2° slanted flange option

- *The diameter of the outer sheath of the cable must be 7... 12 mm or 0.28... 0.47¨.*
- *Cable glands for cQPSus-approved devices must be supplied by the customer.*
- *A weather protection cover is available as an accessory with all devices.*

DN70 / 3¨ Lens antenna: Dimensions in mm

Type of process connection	Dimensions [mm]					
	a	b	c	d	e	f
Thread connection	151	160	①	②	③	④
Low-pressure flange connection	151	160	212.8 ⑤	233.2 ⑤	52 ⑤	21.2
Flange connection	151	160	233.2 ⑤	—	72 ⑤	—
Flange connection with slanted flange option	151	160	233.2 ⑤	243.2 ⑤	72 ⑤	10

Table 2-5: DN70 / 3¨ Lens antenna: Dimensions in mm

① If the device has a G 3 process connection, then c = 209.8 mm. If the device has a 3 NPT process connection, then c = 207.8 mm. If the process temperature is more than +150°C, add 112 mm to this value.
② If the device has a G 3 process connection, then d = 233.2 mm. If the device has a 3 NPT process connection, then d = 239.9 mm. If the process temperature is more than +150°C, add 112 mm to this value.
③ If the device has a G 3 process connection, then e = 49 mm. If the device has a 3 NPT process connection, then e = 47 mm. If the process temperature is more than +150°C, add 112 mm to this value.
④ If the device has a G 3 process connection, then f = 23.3 mm. If the device has a 3 NPT process connection, then f = 30 mm.
⑤ If the process temperature is more than +150°C, add 112 mm to this value

DN70 / 3¨ Lens antenna: Dimensions in inches

Type of process connection	Dimensions [inches]					
	a	b	c	d	e	f
Thread connection	5.94	6.30	①	②	③	④
Low-pressure flange connection	5.94	6.30	8.38 ⑤	9.18 ⑤	2.05 ⑤	0.83
Flange connection	5.94	6.30	9.18 ⑤	—	2.83 ⑤	—
Flange connection with slanted flange option	5.94	6.30	9.18 ⑤	9.57 ⑤	2.83 ⑤	0.39

Table 2-6: DN70 / 3¨ Lens antenna: Dimensions in inches

① If the device has a G 3 process connection, then c = 8.26¨. If the device has a 3 NPT process connection, then c = 8.18¨. If the process temperature is more than +302°F, add 4.41¨ to this value.
② If the device has a G 3 process connection, then d = 9.18¨. If the device has a 3 NPT process connection, then d = 9.44¨. If the process temperature is more than +302°F, add 4.41¨ to this value.
③ If the device has a G 3 process connection, then e = 1.93¨. If the device has a 3 NPT process connection, then e = 1.85¨. If the process temperature is more than +302°F, add 4.41¨ to this value.
④ If the device has a G 3 process connection, then f = 0.92¨. If the device has a 3 NPT process connection, then f = 1.18¨.
⑤ If the process temperature is more than +302°F, add 4.41¨ to this value

Purging option

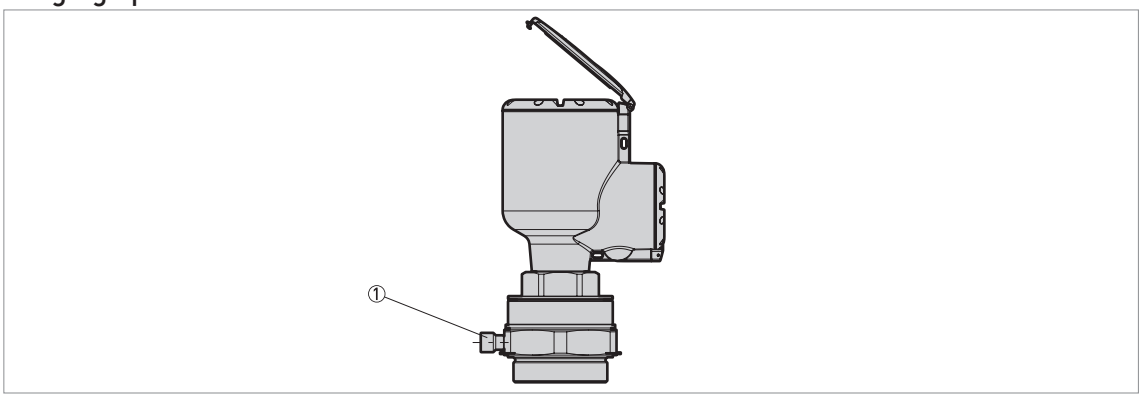

Figure 2-13: Purging options

① G 1/4 threaded connection for purging system (the plug is supplied by the manufacturer)

Purging system

Flange connections must have a pressure rating of PN10 (EN 1092-1), PN16 (EN 1092-1), Class 150 (ASME B16.5) or be a low-pressure flange (PN01 / 15 psig). A purging system adaptor is also available as an accessory for devices with threaded connections that do not have a purging system.

Stainless-steel cover options

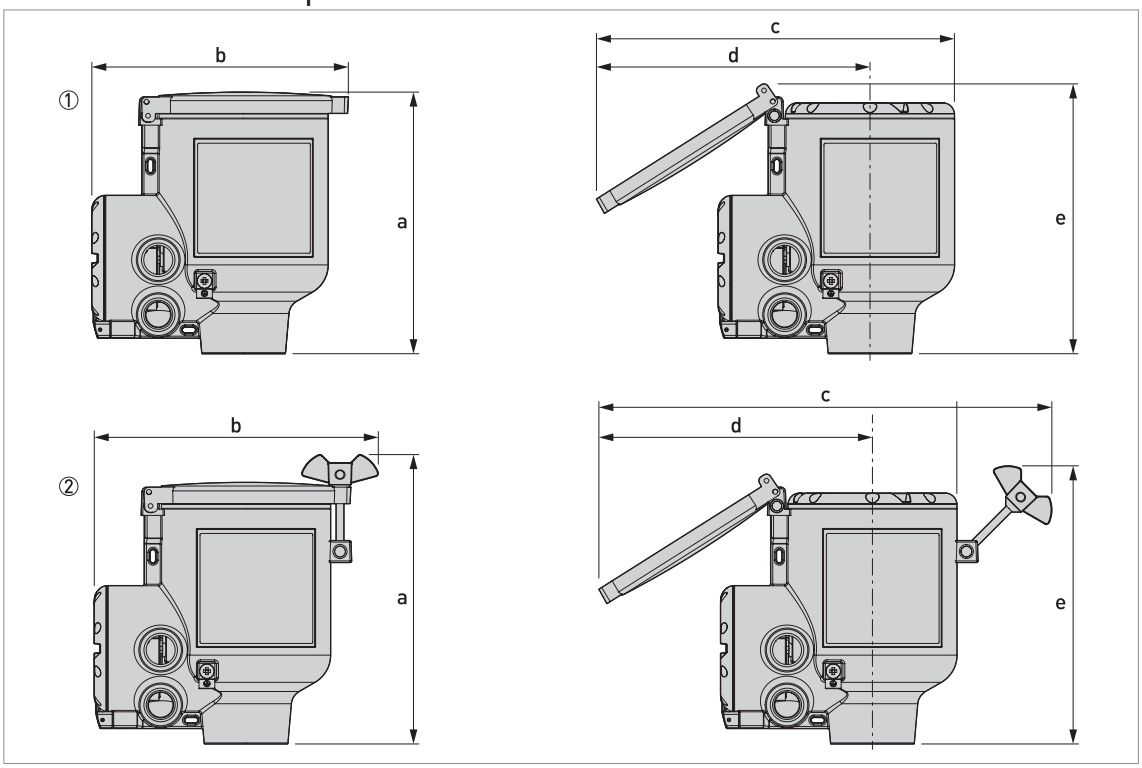

Figure 2-14: Stainless-steel cover options

① Signal converter housing with stainless-steel cover - without locking system
② Signal converter housing with stainless-steel cover - with locking system

	Dimensions									
	a		b		c		d		e	
	[mm]	[inch]	[mm]	[inch]	[mm]	[inch]	[mm]	[inch]	[mm]	[inch]
Without locking system	167	6.57	164	6.46	229	9.02	175	6.89	172	6.77
With locking system	184	7.24	181	7.13	289	11.38	175	6.89	177	6.97

Table 2-7: Stainless-steel cover options

Weather protection option

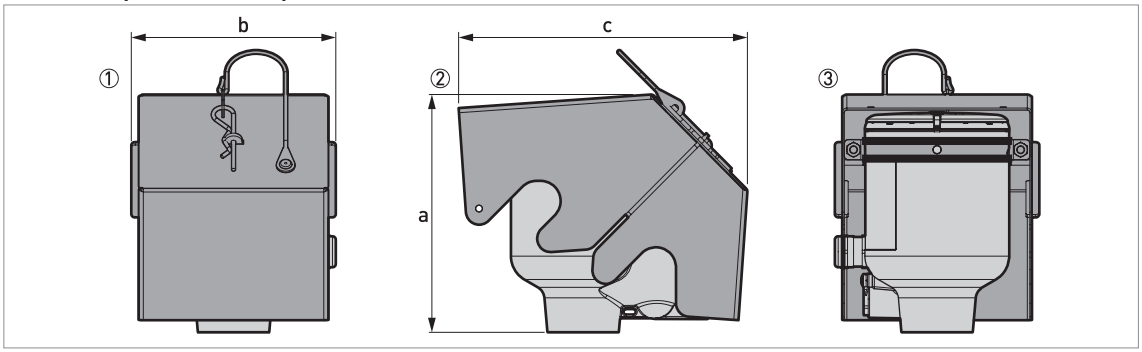

Figure 2-15: Weather protection option

① Front view (with weather protection closed)
② Left side (with weather protection closed)
③ Rear view (with weather protection closed)

	Dimensions						Weights [kg]	
	a		b		c			
	[mm]	[inch]	[mm]	[inch]	[mm]	[inch]	[kg]	[lb]
Weather protection	177	6.97	153	6.02	216	8.50	1.3	2.9

Table 2-8: Weather protection option

Converter weight

Type of housing	Weights	
	[kg]	[lb]
Compact aluminium housing	2.1	4.6
Compact aluminium housing with distance piece ①	3.0	6.6
Compact stainless-steel housing	4.5	9.9
Compact stainless-steel housing with distance piece ①	5.4	11.9

Table 2-9: Converter weight

① If the process temperature is more than +150°C / +302°F, the housing has a distance piece. For more data about the overall dimensions of the device, refer to the "Dimensions and weights" section.

Antenna option weights

Antenna options	Min./Max. weights	
	[kg]	[lb]
Standard options, with converter		
DN40 (1½") Lens antenna with G 1½ or 1½ NPT threaded connection	2.5	5.5
DN70 (3") Lens antenna with G 3 or 3 NPT threaded connection	4.3	9.5
DN40 (1½") Lens antenna with G 1½ or 1½ NPT threaded connection and low-pressure flange	3.1	6.8
DN70 (3") Lens antenna with G 3 or 3 NPT threaded connection and low-pressure flange	4.8	10.6
DN40 (1½") Lens antenna with DN80 PN16 / B1 or NPS 3 Class 150 / RF flange ①	6.7	14.8
DN70 (3") Lens antenna with DN80 PN16 / B1 or NPS 3 Class 150 / RF flange ①	7.0	15.4
DN40 (1½") Lens antenna with DN80 PN16 / B1 or NPS 3 Class 150 / RF flange and 2° PP slanted flange ①	6.9	15.2
DN70 (3") Lens antenna with DN80 PN16 / B1 or NPS 3 Class 150 / RF flange and 2° PP slanted flange ①	7.1	15.7

Table 2-10: Antenna option weights

① NPS = National Pipe Size. For more data about the dimensions of ASME flanges, refer to the ASME B16.5 standard.

3.1 Intended use

Responsibility for the use of the measuring devices with regard to suitability, intended use and corrosion resistance of the used materials against the measured fluid lies solely with the operator.

The manufacturer is not liable for any damage resulting from improper use or use for other than the intended purpose.

This radar level transmitter measures distance, level, mass, volume and reflectivity of granulates and powders.

It can be installed on silos, hoppers and bunkers.

3.2 Pre-installation requirements

Obey the precautions that follow to make sure that the device is correctly installed.

- Make sure that there is sufficient space on all sides.
- Protect the signal converter from direct sunlight. If necessary, install the weather protection accessory.
- Do not subject the signal converter to heavy vibrations. The devices are tested for vibration and agree with IEC 60068-2-6.

3.3 Installation

3.3.1 Pressure and temperature ranges

The process connection temperature range must agree with the temperature limits of the gasket material. The operating pressure range is subject to the process connection used and the flange temperature.

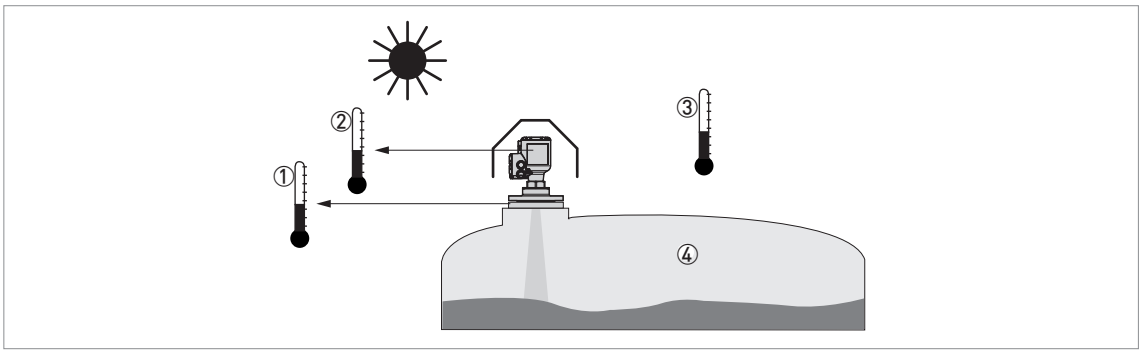

Figure 3-1: Pressure and temperature ranges

① Temperature at the process connection
Non-Ex devices: The temperature range depends on the type of antenna, process connection and the seal material. Refer to the table that follows.
Devices with Hazardous Location approvals: see supplementary instructions

② Ambient temperature for operation of the display
-20...+70°C / -4...+158°F
If the ambient temperature is not between these limits, then it is possible that the display screen will not operate temporarily. The device continues to measure level and send an output signal.

③ Ambient temperature
Non-Ex devices: -40...+80°C / -40...+176°F
Devices with Hazardous Location approvals: see supplementary instructions

④ Process pressure
Depends on the type of antenna and process connection. Refer to the table that follows.

Maximum process connection temperature and operating pressure

Antenna type	Maximum process connection temperature		Maximum operating pressure	
	[°C]	[°F]	[barg]	[psig]
Lens DN40 (1½¨),PEEK	+200 ①	+392 ①	40	580
Lens DN70 (3¨),PEEK	+200 ①	+392 ①	40	580

Table 3-1: Maximum process connection temperature and operating pressure

① If the process connection temperature is more than +150°C / +302°F, the device has a distance piece. For more data about the overall dimensions of the device, refer to the "Dimensions and weights section".

For more data on pressure ratings, refer to *Guidelines for maximum operating pressure* on page 20.

3.3.2 Recommended mounting position

Follow these recommendations to make sure that the device measures correctly. They have an effect on the performance of the device.

We recommend that you prepare the installation when the tank is empty.

Recommended nozzle position for solids

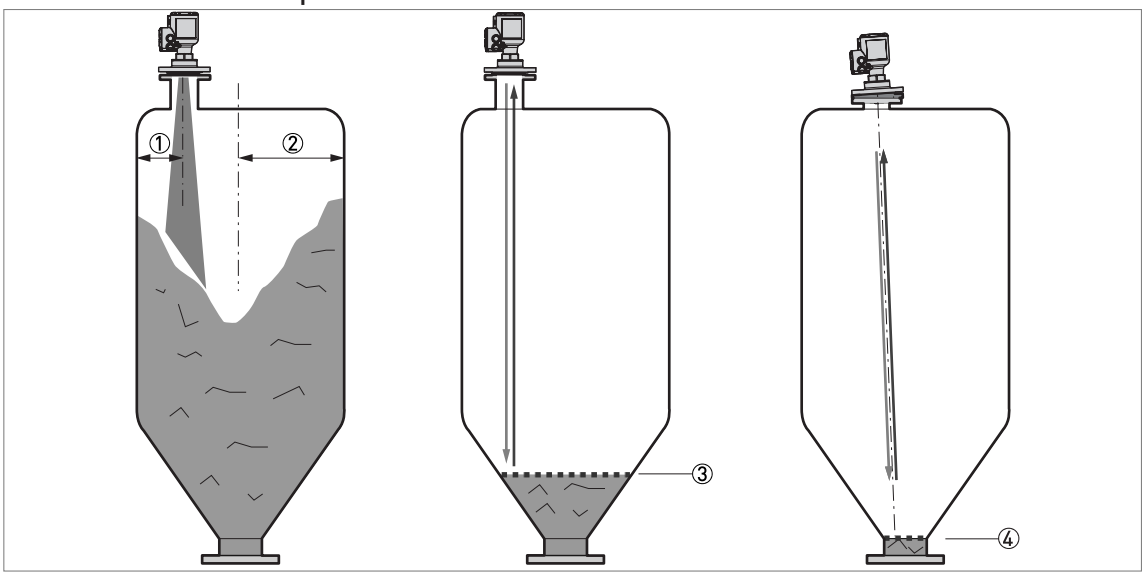

Figure 3-2: Recommended nozzle position for solids

① Position of the process fitting from the silo wall, r/2 (for the DN40 (1½") or DN70 (3") Lens antenna)
② Radius of the silo, r
③ The minimum measured level for a device without a 2° slanted PP flange option or orientation system (max. 30°)
④ The minimum measured level for a device with a 2° slanted PP flange option or orientation system (max. 30°)

If there is a nozzle on the tank before installation, the nozzle must be a minimum of 200 mm / 7.9" from the tank wall. The tank wall must be flat and there must not be obstacles adjacent to the nozzle or on the tank wall.

Number of devices that can be operated in a silo

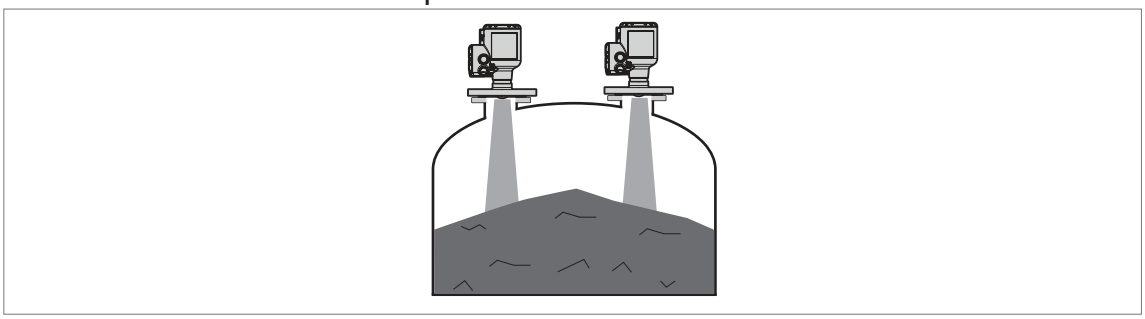

Figure 3-3: There is no maximum limit to the number of devices that can be operated in the same silo

There is no maximum limit to the number of devices that can be operated in the same silo. They can be installed adjacent to other radar level transmitters.

3.3.3 Mounting restrictions

LPR and TLPR devices

LPR (Level Probing Radar) *devices measure level in the open air or in a closed space (a metallic tank etc.).* ***TLPR (Tank Level Probing Radar)*** *devices measure level in a closed space only. You can use LPR devices for TLPR applications. .*

Causes of interference signals

- Objects in the tank or silo.
- Sharp corners that are perpendicular to the path of the radar beam.
- Sudden changes in tank diameter in the path of the radar beam.

Do not install the device above objects in the silo (ladder, supports etc.) or pit. Objects in the silo or pit can cause interference signals. If there are interference signals, the device will not measure correctly.
If it is not possible to install the device on another part of the silo or pit, do an empty spectrum scan.

Equipment and obstacles: how to prevent measurement of interference signals

Do not put the device immediately above equipment and obstacles in a silo or pit. This can have an effect on the performance of the device.

If possible, do not install a nozzle on the silo centerline.

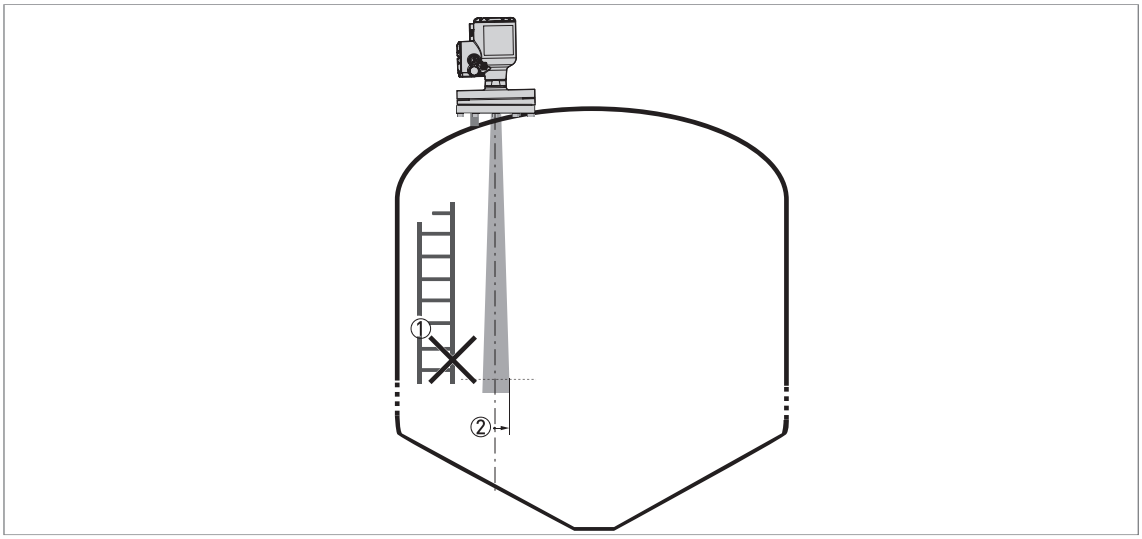

Figure 3-4: Equipment and obstacles: how to prevent measurement of interference signals

① We recommend that you do an empty spectrum recording if there are too many obstacles in the radar beam (refer to the handbook).
② Beam radius of the antenna: refer to the table below. The beam radius increases by increments of "x" mm for each metre of distance from the antenna.

Beam radius of the antenna

Antenna type	Beam angle	Beam radius, x	
		[mm/m]	[in/ft]
Lens, DN40 (1½")	8°	70	0.8
Lens, DN70 (3")	4°	35	0.4

Table 3-2: Beam radius of the antenna

Product inlets

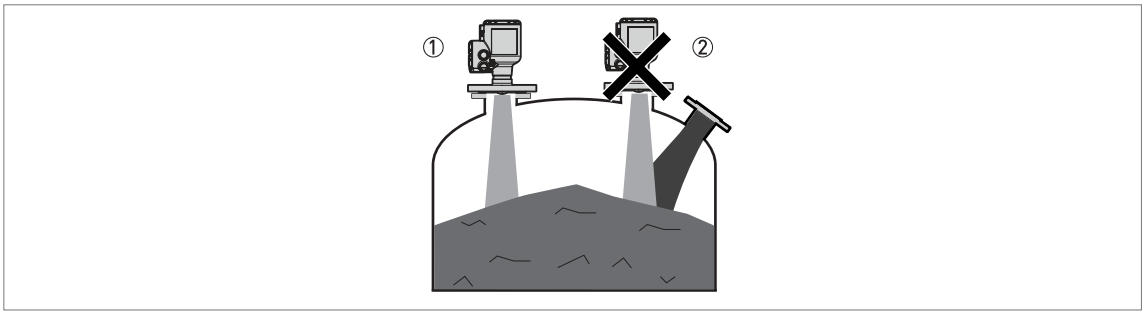

Figure 3-5: Product inlets

① The device is in the correct position.
② The device is too near to the product inlet.

Do not put the device near to the product inlet. If the product that enters the silo touches the antenna, the device will measure incorrectly. If the product fills the silo directly below the antenna, the device will also measure incorrectly.

For more data about the measuring range of each type of antenna, refer to Measuring accuracy on page 17.

Installation height above mean sea level

Attach the weather protection accessory to the device if you install it more than 2000 m / 6560 ft above mean sea level.

3.3.4 Process connections

Flange connections

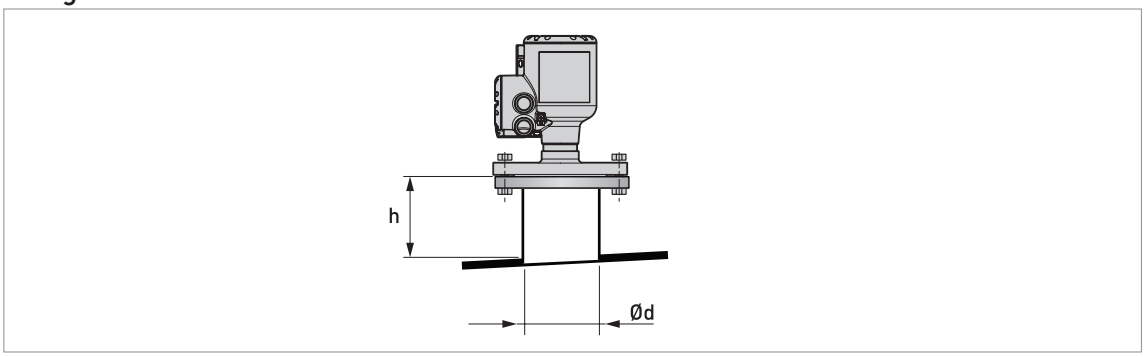

Figure 3-6: Flange connections

Ød = nozzle diameter
h = nozzle height

The DN200 PN01 low-pressure flange (EN 1092-1) option is not compatible with a 200A JIS 10K flange (JIS B2220).

Recommended nozzle size for flange connections

The nozzle must be as short as possible. Refer to the table below for the maximum height of the nozzle:

Nozzle and antenna diameter, Ød		Maximum nozzle height, h			
		Lens, DN40 (1½")		Lens, DN70 (3")	
[mm]	[inch]	[mm]	[inch]	[mm]	[inch]
40	1½	50 ①	1.97 ①	—	—
50	2	50 ①	1.97 ①	—	—
80	3	150 ①	5.91 ①	200	7.87
100	4	200 ①	7.87 ①	300	11.81
150	6	250 ①	9.84 ①	500	19.69
200	8	300 ①	11.81 ①	500	19.69

Table 3-3: Recommended nozzle size for flange connections

① If the device has an antenna extension, this option extends the maximum nozzle height. Add 112 mm / 4.4" to this value.

Threaded connections

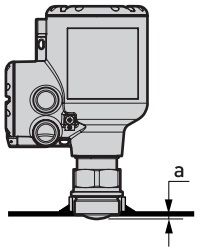

Figure 3-7: Threaded connections

a = 6 mm / 0.24", if the device has an threaded connection and DN40 (1½") Lens antenna

Recommended socket size for threaded connections

The socket must be as short as possible. If the socket is in a recess, then use the maximum limits for nozzle dimensions (flange connections) in this section.

If the device has antenna extensions, this option extends the maximum socket height. Add the length of the antenna extensions attached to the device to this value.

4.1 Electrical installation: output options with cable gland

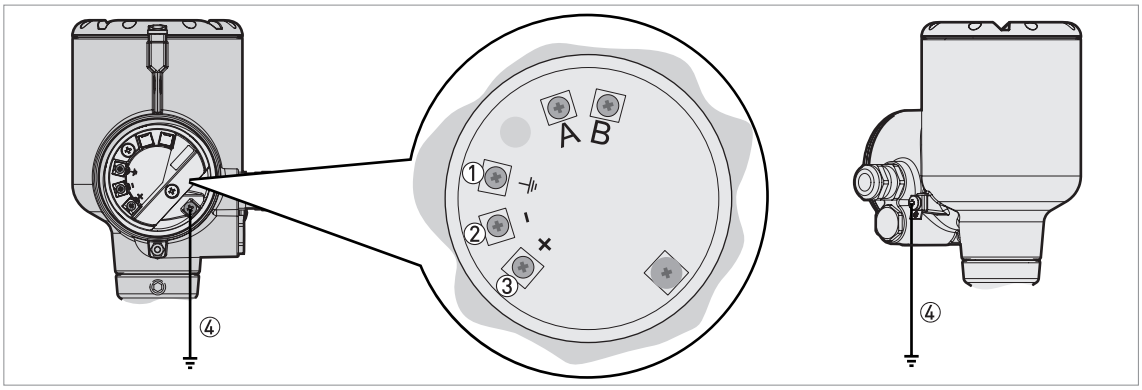

Figure 4-1: Terminals for electrical installation: standard cable gland

① Grounding terminal in the housing (if the electrical cable is shielded)
② Current output -
③ Current output +
④ Location of the external grounding terminal (at the bottom of the converter)

Electrical power to the output terminal energizes the device. The output terminal is also used for HART® communication.

If the device has the 4...20 mA output and HART® communication options, terminals A and B are not used.

4.2 Electrical installation: output options with an M12 male connector

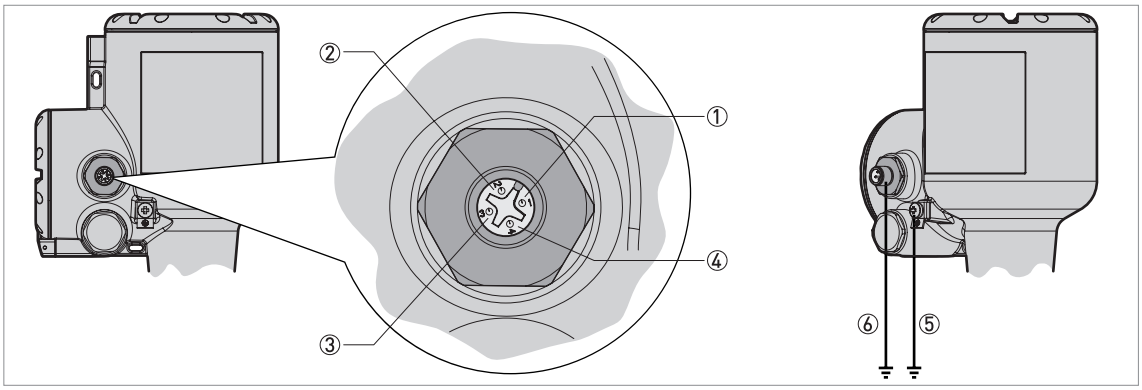

Figure 4-2: Terminals for electrical installation: 4-pin male M12 connector

① Pin 1: current output +
② Pin 2: not connected
③ Pin 3: current output -
④ Pin 4: not connected
⑤ Grounding terminal (external thread of the connector)
⑥ Location of the external grounding terminal (at the bottom of the converter)

Electrical power to the output terminal energizes the device. The output terminal is also used for HART® communication.

4.3 Non-Ex devices

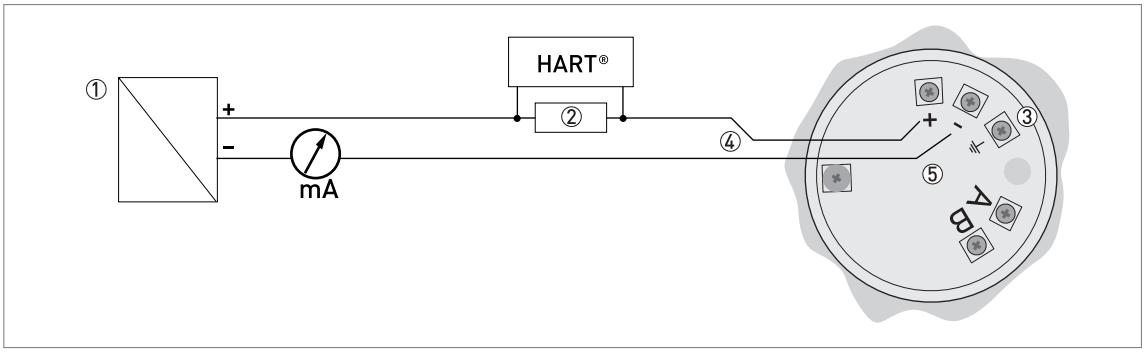

Figure 4-3: Electrical connections for non-Ex devices

① Power supply
② Resistor for HART® communication (typically 250 ohms)
③ Optional connection to the grounding terminal
④ Output: 12...30 VDC for an output of 21.5 mA at the terminal
⑤ Device

4.4 Devices for hazardous locations

For electrical data for device operation in hazardous locations, refer to the related certificates of compliance and supplementary instructions (ATEX, IECEx etc.). This documentation can be downloaded from the website (Download Center).

4.5 Networks

4.5.1 General information

The device uses the HART® communication protocol. This protocol agrees with the HART® Communication Foundation standard. The device can be connected point-to-point. It can also have a polling address of 1 to 63 in a multi-drop network.

The device output is factory-set to communicate point-to-point. To change the communication mode from **point-to-point** to **multi-drop**, refer to "Network configuration" in the handbook.

4.5.2 Point-to-point connection

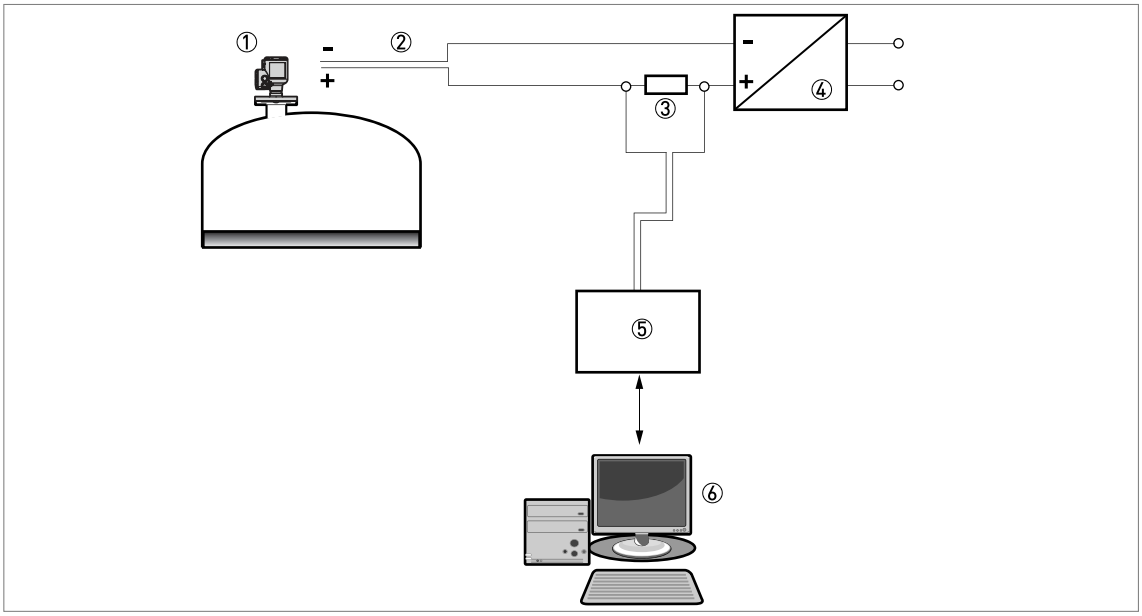

Figure 4-4: Point-to-point connection (non-Ex)

① Address of the device (0 for point-to-point connection)
② 4...20 mA + HART®
③ Resistor for HART® communication (typically 250 ohms)
④ Power supply
⑤ HART® converter
⑥ HART® communication software

4.5.3 Multi-drop networks

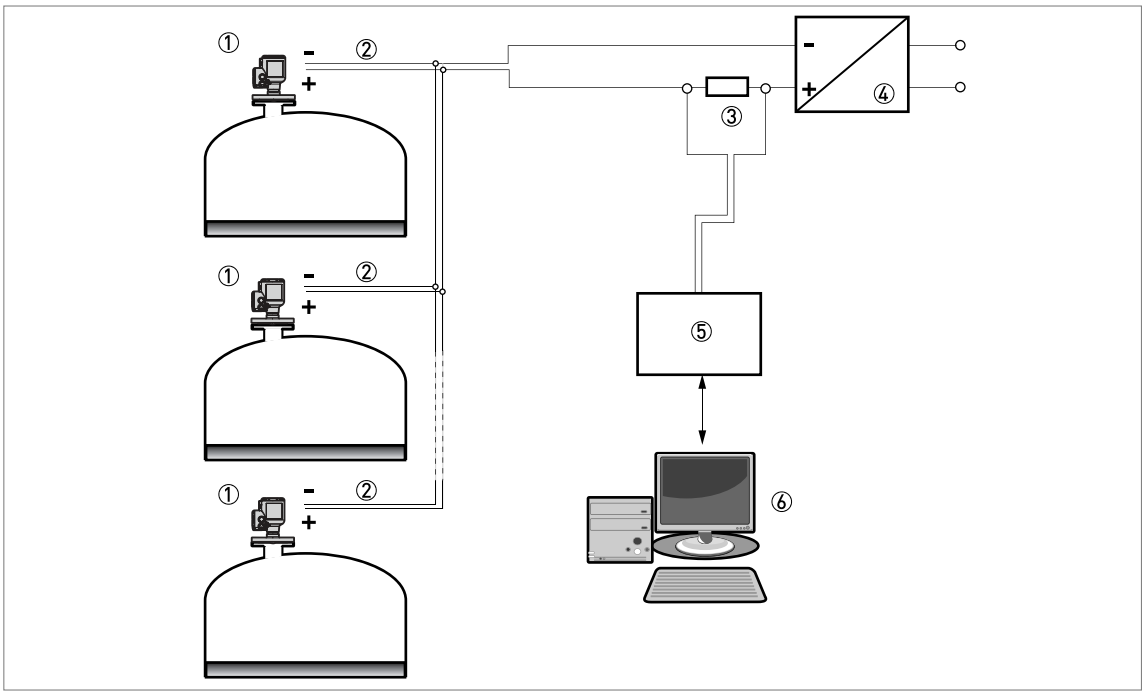

Figure 4-5: Multi-drop network (non-Ex)

① Address of the device (each device must have a different address in multidrop networks)
② 4 mA + HART®
③ Resistor for HART® communication (typically 250 ohms)
④ Power supply
⑤ HART® converter
⑥ HART® communication software

KROHNE – Products, Solutions and Services

- Process instrumentation for flow, level, temperature, pressure measurement and process analytics
- Flow metering, monitoring, wireless and remote metering solutions
- Engineering, commissioning, calibration, maintenance and training services

Head Office KROHNE Messtechnik GmbH
Ludwig-Krohne-Str. 5
47058 Duisburg (Germany)
Tel.: +49 203 301 0
Fax: +49 203 301 10389
info@krohne.com

The current list of all KROHNE contacts and addresses can be found at:
www.krohne.com

© KROHNE 01/2021 - 4005813003 - TD OPTIWAVE 6500 R03 en - Subject to change without notice.