OPTIWAVE 6400 C Handbook

24 GHz Radar (FMCW) Level Transmitter for solids from granulates to rocks

© KROHNE 02/2019 - 4005813902 - MA OPTIWAVE 6400 R02 en

KROHNE

IMPRINT

All rights reserved. It is prohibited to reproduce this documentation, or any part thereof, without the prior written authorisation of KROHNE Messtechnik GmbH.

Subject to change without notice.

Copyright 2019 by
KROHNE Messtechnik GmbH - Ludwig-Krohne-Str. 5 - 47058 Duisburg (Germany)

1 Safety instructions 7

1.1 Software history 7
1.2 Intended use 8
1.3 Certification 8
1.4 Radio approvals 9
1.4.1 European Union (EU) 9
1.4.2 U.S.A. and Canada 12
1.5 Safety instructions from the manufacturer 15
1.5.1 Copyright and data protection 15
1.5.2 Disclaimer 15
1.5.3 Product liability and warranty 16
1.5.4 Information concerning the documentation 16
1.5.5 Warnings and symbols used 17
1.6 Safety instructions for the operator 17

2 Device description 18

2.1 Scope of delivery 18
2.2 Device description 19
2.3 Visual Check 20
2.4 Nameplates 21
2.4.1 Nameplate (examples) 21

3 Installation 22

3.1 General notes on installation 22
3.2 Storage 22
3.3 Transport 23
3.4 Pre-installation requirements 23
3.5 Pressure and temperature ranges 24
3.6 Recommended mounting position 25
3.6.1 General notes 25
3.6.2 Tanks with dish-shaped and conical bottoms 27
3.7 Mounting restrictions 28
3.7.1 General notes 28
3.7.2 Process connections 30
3.8 How to attach antenna extensions 35
3.9 Orientation system (accessory) 38
3.9.1 How to attach the orientation system to the device 38
3.9.2 How to tilt the device 41
3.10 How to turn or remove the display module (option) 42
3.11 Weather protection 43
3.11.1 How to attach the weather protection to the device 43
3.11.2 How to open the weather protection 45

4 Electrical connections 46

4.1 Safety instructions 46
4.2 General notes 46
4.3 Electrical installation: output options with cable gland 47
4.4 Electrical installation: output options with an M12 male connector 51
4.5 Electrical connection for current output 51
4.5.1 Non-Ex devices 51
4.5.2 Devices for hazardous locations 52
4.6 Ingress protection 52
4.7 Networks 53
4.7.1 General information 53
4.7.2 Point-to-point connection 53
4.7.3 Multi-drop networks 54

5 Start-up 55

5.1 Start-up checklist 55
5.2 How to start the device 55
5.3 Operating concept 55
5.4 Digital display screen 56
5.4.1 Display screen layout 56
5.4.2 Keypad buttons 57
5.5 Remote communication with PACTware™ 59
5.6 Remote communication with the AMS™ Device Manager 60

6 Operation 61

6.1 User modes 61
6.2 Normal mode 61
6.3 Program mode 65
6.3.1 General notes 65
6.3.2 Protection of the device settings (access levels) 66
6.3.3 How to get access to the Quick Setup menu 68
6.3.4 Keypad functions 69
6.3.5 How to save settings changed in Program mode 72
6.3.6 Menu overview 73
6.3.7 Function description 78
6.4 Further information on device configuration in Program mode 98
6.4.1 Standard setup 98
6.4.2 Empty spectrum recording 101
6.4.3 HART® network configuration 103
6.4.4 Distance measurement 104
6.4.5 Level measurement 106
6.4.6 How to configure the device to measure volume or mass 108
6.4.7 How to measure correctly in silos with curved or conical bottoms 110
6.4.8 How to make a filter to remove radar signal interference 111
6.5 Status messages and diagnostic data 112

7 Service 119

7.1 Periodic maintenance ... 119
7.1.1 General notes ... 119
7.1.2 Maintenance of the O-rings for the housing covers ... 119
7.1.3 How to clean the top surface of the device ... 120
7.1.4 How to clean horn antennas under process conditions ... 120
7.2 Service warranty ... 121
7.3 Replacement of the OPTIWAVE 6300 signal converter with the OPTIWAVE 6400 signal converter ... 122
7.4 Spare parts availability ... 125
7.5 Availability of services ... 125
7.6 Returning the device to the manufacturer ... 125
7.6.1 General information ... 125
7.6.2 Form (for copying) to accompany a returned device ... 126
7.7 Disposal ... 126

8 Technical data 127

8.1 Measuring principle ... 127
8.2 Technical data ... 129
8.3 Measuring accuracy ... 135
8.4 Minimum power supply voltage ... 136
8.5 Guidelines for maximum operating pressure ... 137
8.6 Dimensions and weights ... 139

9 Description of HART interface 149

9.1 General description ... 149
9.2 Software history ... 150
9.3 Connection variants ... 150
9.3.1 Point-to-Point connection – analogue / digital mode ... 150
9.3.2 Multi-Drop connection (2-wire connection) ... 151
9.4 HART® device variables ... 151
9.5 Field Communicator 475 (FC 475) ... 151
9.5.1 Installation ... 151
9.5.2 Operation ... 152
9.6 Asset Management Solutions (AMS®) ... 152
9.6.1 Installation ... 152
9.6.2 Operation ... 152
9.6.3 Parameter for the basic configuration ... 152
9.7 Field Device Tool / Device Type Manager (FDT / DTM) ... 153
9.7.1 Installation ... 153
9.7.2 Operation ... 153
9.8 Process Device Manager (PDM) ... 153
9.8.1 Installation ... 153
9.8.2 Operation ... 153

9.9 HART® menu tree for AMS 154
9.9.1 Overview AMS menu tree (positions in menu tree) 154
9.9.2 AMS menu tree (details for settings) 154
9.10 HART® menu tree for PDM 158
9.10.1 Overview PDM menu tree (positions in menu tree) 158
9.10.2 PDM menu tree (details for settings) 159

10 Appendix 162

10.1 Order code 162
10.2 Spare parts 167
10.3 Accessories: general items 173
10.4 Accessories: process connection kits 174
10.5 Glossary 176

11 Notes 179

1.1 Software history

"Firmware revision" agrees with NAMUR NE 53. It is a series of numbers used to record the revision status of embedded software (firmware) in electronic equipment assemblies. It gives data on the type of changes made and the effect that changes have on compatibility.

Data about software revisions is shown in menu 1.1.0 IDENT. For more data, refer to *Function description* on page 78. If it is not possible to refer to the device menu, record the serial number of the device (given on the device nameplate) and speak to the supplier.

Changes and effect on compatibility

1	Downwards compatible changes and fault repair with no effect on operation (e.g. spelling mistakes on display)	
2-_	Downwards compatible hardware and/or software change of interfaces:	
	H	HART®
	P	Profibus
	F	FOUNDATION fieldbus
3-_	Downwards compatible hardware and/or software change of inputs and outputs:	
	CO	Current output
	FO, PO	Frequency output / pulse output
	SO	Status output
	LS	Limit switch
	CI	Current input
	D	Display

Release date	Printed circuit assembly	Firmware revision	Electronic revision	Hardware revision	Changes and compatibility	Documentation
2017-02-02	HMI (LCD display option)	BL1.24.04	ER1.0.06	4002905801a ①	—	MA OPTIWAVE 6400 R01
	Main and Support			4002815701d		
	Sensor			4002859301a		
2018-12-21	HMI (LCD display option)	BL1.31.05	ER2.0.0_	4002905801b ①	—	MA OPTIWAVE 6400 R02
	Main and Support			4002815701f		
	Sensor			4002859301a		

① If the device does not have the display module option, the module reference number is 4002905802a

1.2 Intended use

CAUTION!
Responsibility for the use of the measuring devices with regard to suitability, intended use and corrosion resistance of the used materials against the measured fluid lies solely with the operator.

INFORMATION!
The manufacturer is not liable for any damage resulting from improper use or use for other than the intended purpose.

This radar level transmitter measures distance, level, mass, volume and reflectivity of granulates and powders.

It can be installed on silos, hoppers and bunkers.

1.3 Certification

DANGER!
For devices used in hazardous areas, additional safety notes apply; please refer to the Ex documentation.

CE marking

The device meets the essential requirements of the EU Directives:

- Electromagnetic Compatibility (EMC) directive
- The safety part of the Low-Voltage directive
- For devices used in hazardous locations: ATEX directive

The manufacturer certifies successful testing of the product by applying the CE marking. For more data about the EU Directives and European Standards related to this device, refer to the EU Declaration of Conformity. You can download this document free of charge from the website (Download Center).

All devices are based on the CE marking and meet the requirements of NAMUR Recommendations NE 21, NE 43, NE 53 and NE 107.

1.4 Radio approvals

1.4.1 European Union (EU)

INFORMATION!
LPR (Level Probing Radar) *devices measure level in the open air or in a closed space (a metallic tank etc.).* ***TLPR (Tank Level Probing Radar)*** *devices measure level in a closed space only. You can use LPR devices for TLPR applications. The LPR and TLPR devices meet the requirements of the RED (Radio Equipment Directive) for use in the member countries of the EU.*

For more data about the order code, refer to Order code on page 162.

This level transmitter is approved to be used outside metallic tanks. If you use the device in the open air, read the device nameplate to make sure that the device can be used for your application. Only the antennas that follow are permitted for open-air applications:

Antenna type	Order code
316L / DN80 (3¨) Metallic Horn	VFDCxxxxxxxxxxxxx4xxx...
316L / DN100 (4¨) Metallic Horn	VFDCxxxxxxxxxxxxx5xxx...
316L / DN150 (6¨) Metallic Horn	VFDCxxxxxxxxxxxxx6xxx...
316L / DN200 (8¨) Metallic Horn	VFDCxxxxxxxxxxxxx7xxx...
PP / DN80 (3¨) Drop	VFDCxxxxxxxxxxxxxAxxx...
PP / DN100 (4¨) Drop	VFDCxxxxxxxxxxxxxBxxx...
PP / DN150 (6¨) Drop	VFDCxxxxxxxxxxxxxCxxx...
PTFE / DN80 (3¨) Drop	VFDCxxxxxxxxxxxxxExxx...
PTFE / DN100 (4¨) Drop	VFDCxxxxxxxxxxxxxFxxx...
PTFE / DN150 (6¨) Drop	VFDCxxxxxxxxxxxxxGxxx...

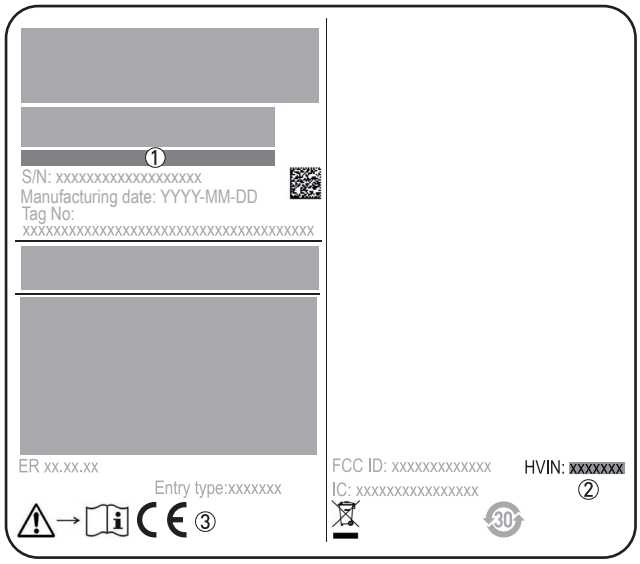

Figure 1-1: European Union: radio approval information on the nameplate

① Type code (defined in order). For more data, refer to *Order code* on page 162.
② HVIN (Hardware Version Identification Number). This number gives the radar signal frequency (24GHZ = 24 GHz), the location of the device (T=TLPR or L=LPR) and the type of signal converter (compact (C))
TLPR device: HVIN: 24GHZ-T-C
LPR device: HVIN: 24GHZ-L-C
③ CE sign

TLPR (Tank Level Probing Radar) devices only

Use approved personnel to install the device. The device and the tank agree with the RED (Radio Equipment Directive) if you obey the instructions that follow:

- TLPR (Tank Level Probing Radar) are required to be installed at a permanent fixed position at a closed (not open) metallic tank or reinforced concrete tank, or similar enclosure structure made of comparable attenuating material;
- flanges and attachments of the TLPR equipment shall provide the necessary microwave sealing by design;
- sight glasses shall be coated with a microwave-proof coating when necessary (i.e. electrically conductive coating);
- manholes or connection flanges at the tank shall be closed to ensure a low-level leakage of the signal into the air outside the tank;
- whenever possible, mounting of the TLPR equipment shall be on top of the tank structure with the orientation of the antenna to point in a downward direction;
- installation and maintenance of the TLPR equipment shall be performed by professionally trained individuals only.

For data about how to install EMI/RFI shielding gaskets, refer to the instructions supplied with this accessory.

LPR (Level Probing Radar) devices only

Use approved personnel to install the device. If the device is operated in the open air (outdoors), it agrees with the RED (Radio Equipment Directive) if you obey these instructions:

- The antenna must always point downwards. The boresight direction of the antenna must be vertical. No other angles are permitted.
- Install the device more than 4 km / 2.485 mi away from radio astronomy sites.
- If the device is 4...40 km / 2.485...24.855 mi away from radio astronomy sites, do not install the device more than 15 m / 49.21 ft above the ground.

CAUTION!
If it is necessary to install the device less than 4 km / 2.485 mi from radio astronomy sites, you must get the approval of the national regulatory authority before installation (e.g. ANFR (France), Bundesnetzagentur (Germany), Ofcom (United Kingdom) etc.).

Radio quiet zones: locations of radio astronomy sites (stations) in Europe and northern Eurasia

Country	Name of the station	Location	
		Latitude, φ	Longitude, λ
Finland	Metsähovi	60°13'04" N	24°23'37" E
	Tuorla	60°24'56" N	22°26'31" E
France	Plateau de Bure	44°38'01" N	05°54'26" E
Germany	Effelsberg	50°31'32" N	06°53'00" E
Hungary	Penc	47°47'22" N	19°16'53" E
Italy	Medicina	44°31'14" N	11°38'49" E
	Noto	36°52'34" N	14°59'21" E
	Sardinia	39°29'50" N	09°14'40" E
Latvia	Ventspils	57°33'12" N	21°51'17" E
Poland	Kraków – Fort Skala	50°03'18" N	19°49'36" E
Russia	Dmitrov	56°26'00" N	37°27'00" E
	Kalyazin	57°13'22" N	37°54'01" E
	Pushchino	54°49'00" N	37°40'00" E
	Zelenchukskaya	43°49'53" N	41°35'32" E
Spain	Yebes	40°31'27" N	03°05'22" W
	Robledo	40°25'38" N	04°14'57" W
Switzerland	Bleien	47°20'26" N	08°06'44" E
Sweden	Onsala	57°23'45" N	11°55'35" E
UK	Cambridge	52°09'59" N	00°02'20" E
	Darnhall	53°09'22" N	02°32'03" W
	Jodrell Bank	53°14'10" N	02°18'26" W
	Knockin	52°47'24" N	02°59'45" W
	Pickmere	53°17'18" N	02°26'38" W

1.4.2 U.S.A. and Canada

INFORMATION!
LPR (Level Probing Radar) *devices measure level in the open air or in a closed space (a metallic tank etc.).* ***TLPR (Tank Level Probing Radar)*** *devices measure level in a closed space only.*

For more data about the order code, refer to Order code on page 162.

This level transmitter is approved to be used outside metallic tanks. If you use the device in the open air, read the device nameplate to make sure that the device can be used for your application. Only the antennas that follow are permitted for open-air applications:

Antenna type	Order code
316L / DN80 (3¨) Metallic Horn	VFDCxxxxxxxxxxxxx4xxx...
316L / DN100 (4¨) Metallic Horn	VFDCxxxxxxxxxxxxx5xxx...
316L / DN150 (6¨) Metallic Horn	VFDCxxxxxxxxxxxxx6xxx...
316L / DN200 (8¨) Metallic Horn	VFDCxxxxxxxxxxxxx7xxx...
PP / DN80 (3¨) Drop	VFDCxxxxxxxxxxxxxAxxx...
PP / DN100 (4¨) Drop	VFDCxxxxxxxxxxxxxBxxx...
PP / DN150 (6¨) Drop	VFDCxxxxxxxxxxxxxCxxx...
PTFE / DN80 (3¨) Drop	VFDCxxxxxxxxxxxxxExxx...
PTFE / DN100 (4¨) Drop	VFDCxxxxxxxxxxxxxFxxx...
PTFE / DN150 (6¨) Drop	VFDCxxxxxxxxxxxxxGxxx...

LEGAL NOTICE!
FCC
This device complies with Part 15 of the FCC Rules. Operation is subject to the following two conditions:

1. *This device may not cause harmful interference, and*
2. *this device must accept any interference received, including interference which may cause undesired operation.*

Changes or modifications made to this equipment not expressly approved by the manufacturer may void the FCC authorizations to operate this equipment.

This equipment has been tested and found to comply with the limits for a Class B digital device, pursuant to Part 15 of the FCC Rules. These limits are designed to provide reasonable protection against harmful interference in a residential installation. This equipment generates, uses and can radiate radio frequency energy and, if not installed and used in accordance with the instructions, may cause harmful interference to radio communications. However, there is no guarantee that interference will not occur in a particular installation. If this equipment does cause harmful interference to radio or television reception, which can be determined by turning the equipment off and on, the user is encouraged to try to correct the interference by one or more of the following measures:

- *Reorient or relocate the receiving antenna.*
- *Increase the separation between the equipment and receiver.*
- *Connect the equipment into an outlet on a circuit different from that to which the receiver is connected.*
- *Consult the dealer or an experienced radio/TV technician for help.*

§

LEGAL NOTICE!
IC
This device complies with Industry Canada licence-exempt RSS standard(s).
Operation is subject to the following conditions:
1. *This device may not cause harmful interference, and*
2. *this device must accept any interference received, including interference that may cause undesired operation.*

This device and the handbook complies with the requirements of RSS-Gen. Operation is subject to the conditions that follow:
1. *The installation of the LPR/TLPR device shall be done by trained installers, in strict compliance with the manufacturer's instructions.*
2. *The use of this device is on a "no-interference, no-protection" basis. That is, the user shall accept operations of high-powered radar in the same frequency band which may interfere with or damage this device. However, devices found to interfere with primary licensing operations will be required to be removed at the user's expense.*
3. *The TLPR device shall be installed and operated in a completely enclosed container to prevent RF emissions, which can otherwise interfere with aeronautical navigation.*
4. *LPR devices: Ensure a vertically downward orientation of the transmit antenna and an installation only at fixed locations.*
5. *The installer / user of this device shall ensure that it is at least 10 km from the Dominion Radio Astrophysical Observatory (DRAO) near Penticton, British Columbia. The coordinates of the DRAO are latitude 49° 19'15" N and longitude 119° 37'12" W. For devices not meeting this 10 km separation (e.g. those in the Okanagan Valley, British Columbia) the installer / user must coordinate with, and obtain the written concurrence of, the Director of the DRAO before the equipment can be installed or operated. The Director of the DRAO may be contacted at 250-497-2300 (tel.) or 250-497-2355 (fax). Alternatively, the Manager, Regulatory Standards, Industry Canada, may be contacted.*

The Product Marketing Name (PMN) of this device is "OPTIWAVE x400 series, OPTIWAVE x400 FF-PA series".

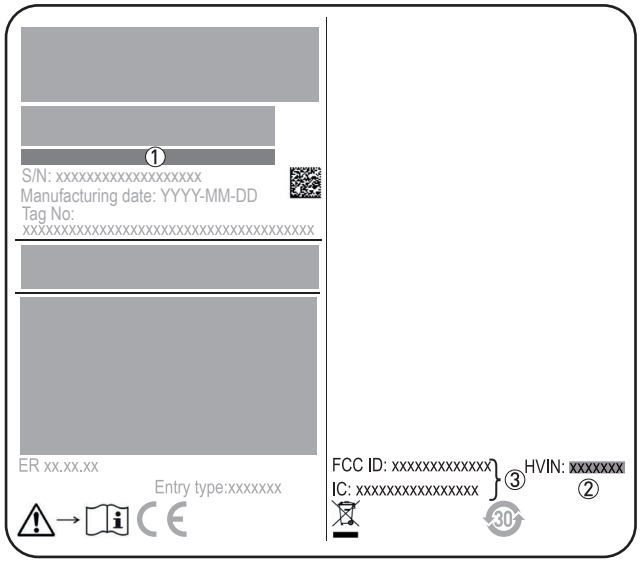

Figure 1-2: U.S.A. and Canada: radio approval information on the nameplate

① Type code (defined in order). For more data, refer to *Order code* on page 162.
② HVIN (Hardware Version Identification Number). This number gives the radar signal frequency (24GHZ = 24 GHz), the location of the device (T=TLPR or L=LPR) and the type of signal converter (compact (C))
TLPR device: HVIN: 24GHZ-T-C
LPR device: HVIN: 24GHZ-L-C
③ FCC ID and IC number
TLPR device: FCC-ID:Q6BFMCW24G74T, IC number: 1991D-FMCW24GX4T
LPR device: FCC-ID: Q6BFMCW24G74L, IC number: 1991D-FMCW24GX4L

1.5 Safety instructions from the manufacturer

1.5.1 Copyright and data protection

The contents of this document have been created with great care. Nevertheless, we provide no guarantee that the contents are correct, complete or up-to-date.

The contents and works in this document are subject to copyright. Contributions from third parties are identified as such. Reproduction, processing, dissemination and any type of use beyond what is permitted under copyright requires written authorisation from the respective author and/or the manufacturer.

The manufacturer tries always to observe the copyrights of others, and to draw on works created in-house or works in the public domain.

The collection of personal data (such as names, street addresses or e-mail addresses) in the manufacturer's documents is always on a voluntary basis whenever possible. Whenever feasible, it is always possible to make use of the offerings and services without providing any personal data.

We draw your attention to the fact that data transmission over the Internet (e.g. when communicating by e-mail) may involve gaps in security. It is not possible to protect such data completely against access by third parties.

We hereby expressly prohibit the use of the contact data published as part of our duty to publish an imprint for the purpose of sending us any advertising or informational materials that we have not expressly requested.

1.5.2 Disclaimer

The manufacturer will not be liable for any damage of any kind by using its product, including, but not limited to direct, indirect or incidental and consequential damages.

This disclaimer does not apply in case the manufacturer has acted on purpose or with gross negligence. In the event any applicable law does not allow such limitations on implied warranties or the exclusion of limitation of certain damages, you may, if such law applies to you, not be subject to some or all of the above disclaimer, exclusions or limitations.

Any product purchased from the manufacturer is warranted in accordance with the relevant product documentation and our Terms and Conditions of Sale.

The manufacturer reserves the right to alter the content of its documents, including this disclaimer in any way, at any time, for any reason, without prior notification, and will not be liable in any way for possible consequences of such changes.

1.5.3 Product liability and warranty

The operator shall bear responsibility for the suitability of the device for the specific purpose. The manufacturer accepts no liability for the consequences of misuse by the operator. Improper installation or operation of the devices (systems) will cause the warranty to be void. The respective "Standard Terms and Conditions" which form the basis for the sales contract shall also apply.

1.5.4 Information concerning the documentation

To prevent any injury to the user or damage to the device it is essential that you read the information in this document and observe applicable national standards, safety requirements and accident prevention regulations.

If this document is not in your native language and if you have any problems understanding the text, we advise you to contact your local office for assistance. The manufacturer can not accept responsibility for any damage or injury caused by misunderstanding of the information in this document.

This document is provided to help you establish operating conditions, which will permit safe and efficient use of this device. Special considerations and precautions are also described in the document, which appear in the form of icons as shown below.

1.5.5 Warnings and symbols used

Safety warnings are indicated by the following symbols.

DANGER!
This warning refers to the immediate danger when working with electricity.

DANGER!
This warning refers to the immediate danger of burns caused by heat or hot surfaces.

DANGER!
This warning refers to the immediate danger when using this device in a hazardous atmosphere.

DANGER!
These warnings must be observed without fail. Even partial disregard of this warning can lead to serious health problems and even death. There is also the risk of seriously damaging the device or parts of the operator's plant.

WARNING!
Disregarding this safety warning, even if only in part, poses the risk of serious health problems. There is also the risk of damaging the device or parts of the operator's plant.

CAUTION!
Disregarding these instructions can result in damage to the device or to parts of the operator's plant.

INFORMATION!
These instructions contain important information for the handling of the device.

LEGAL NOTICE!
This note contains information on statutory directives and standards.

- HANDLING
  This symbol designates all instructions for actions to be carried out by the operator in the specified sequence.

➲ RESULT
This symbol refers to all important consequences of the previous actions.

1.6 Safety instructions for the operator

WARNING!
In general, devices from the manufacturer may only be installed, commissioned, operated and maintained by properly trained and authorized personnel.
This document is provided to help you establish operating conditions, which will permit safe and efficient use of this device.

2.1 Scope of delivery

INFORMATION!
Do a check of the packing list to make sure that you have all the elements given in the order.

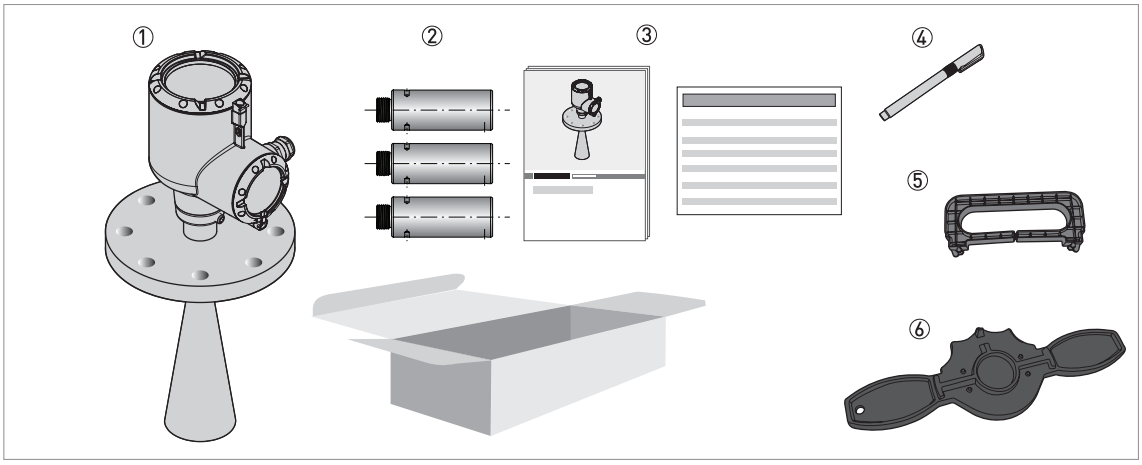

Figure 2-1: Scope of delivery

① Signal converter, process connection and antenna in the ordered version
② Antenna extensions (option). These are supplied attached to the device. If the antenna extensions are too long, the device will be supplied in two parts.
③ Quick Start and supplementary instructions (if the device has the appropriate options)
④ Bar magnet
⑤ Display extractor (for removal of the optional display module)
⑥ Cover wrench (for removal of the device covers)

INFORMATION!
Antenna extensions are available for this device. These are supplied attached to the device. If the antenna extensions are too long, the device will be supplied in two parts. For more data about the assembly procedure, refer to How to attach antenna extensions on page 35.

2.2 Device description

This device is a 24 GHz FMCW-radar level transmitter. It is a non-contact technology and is 2-wire loop-powered. It is designed to measure the distance, level, mass, volume and reflectivity of granulates and powders. For more data about the measuring principle, refer to *Measuring principle* on page 127.

Radar level transmitters use an antenna to emit a signal to the surface of the measured product. The device has many antennas available. Thus, it can measure most products even in difficult conditions. Also refer to *Technical data* on page 127.

If the device is ordered with the applicable options, it can be certified for use in hazardous areas.

The signal converter is attached directly to the process connection and the antenna. The illustration that follows shows the types of antenna.

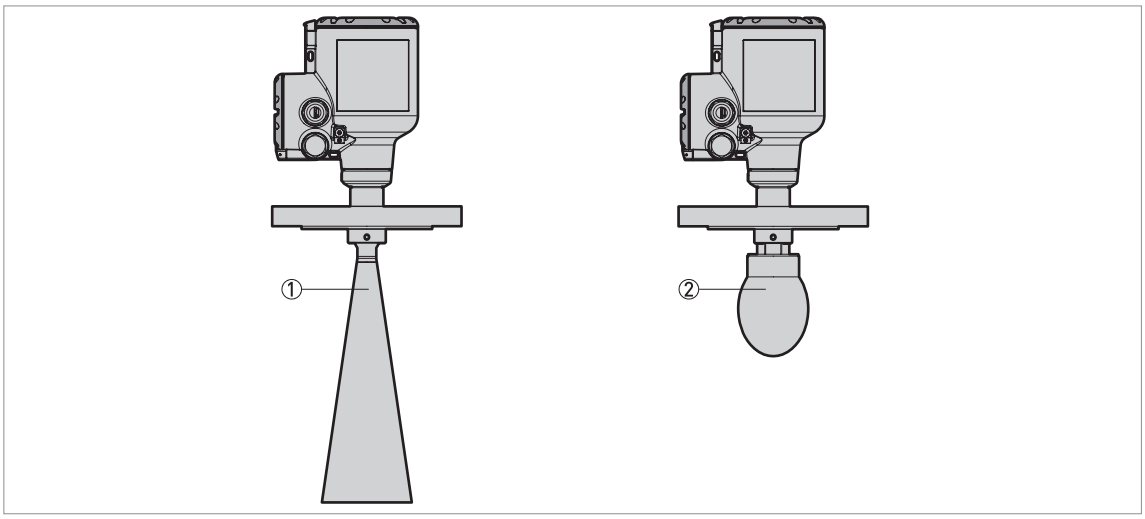

Figure 2-2: Types of antenna

① Metallic Horn antennas (available antenna sizes: DN80 (3"), DN100 (4"), DN150 (6") and DN200 (8")) made of 316L stainless steel. Antenna extensions are available for high nozzles.
② Drop antennas (available antenna sizes: DN80 (3") DN100 (4") and DN150 (6")) made of PTFE or PP. Antenna extensions are available for high nozzles.

INFORMATION!
Accessories:
For more data about general items, refer to Accessories: general items on page 173. For more data about process connections, refer to *Accessories: process connection kits on page 174.*

2.3 Visual Check

WARNING!
If the display screen glass is broken, do not touch.

INFORMATION!
Inspect the packaging carefully for damages or signs of rough handling. Report damage to the carrier and to the local office of the manufacturer.

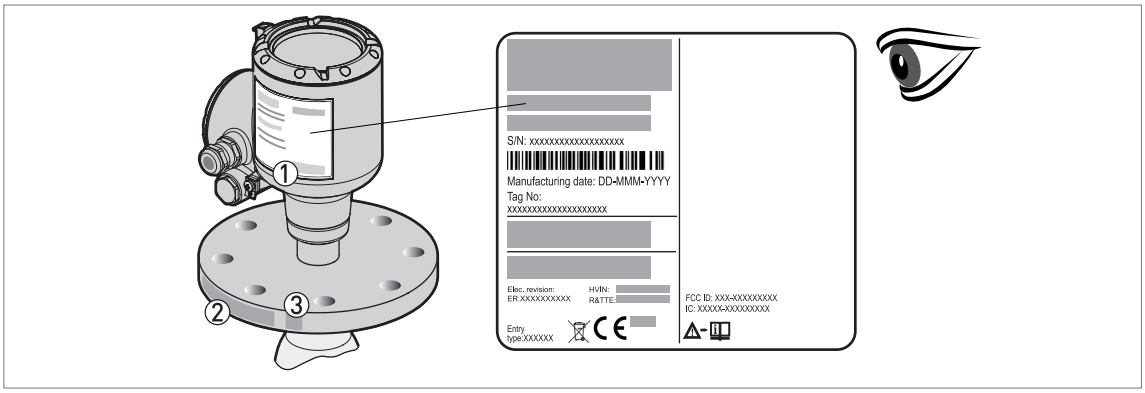

Figure 2-3: Visual check

① Device nameplate (for more data refer to *Nameplate (examples)* on page 21)
② Process connection data (size and pressure rating, material reference and heat number)
③ Gasket material data – refer to the illustration that follows

Figure 2-4: Symbols for the supplied gasket material (on the side of the process connection)

① EPDM
② Kalrez® 6375

If the device is supplied with an FKM/FPM gasket, there is no symbol on the side of the process connection.

INFORMATION!
Look at the device nameplate to ensure that the device is delivered according to your order. Check for the correct supply voltage printed on the nameplate.

INFORMATION!
Compare the material references on the side of the process connection with the order.

2.4 Nameplates

INFORMATION!
Look at the device nameplate to ensure that the device is delivered according to your order. Check for the correct supply voltage printed on the nameplate.

2.4.1 Nameplate (examples)

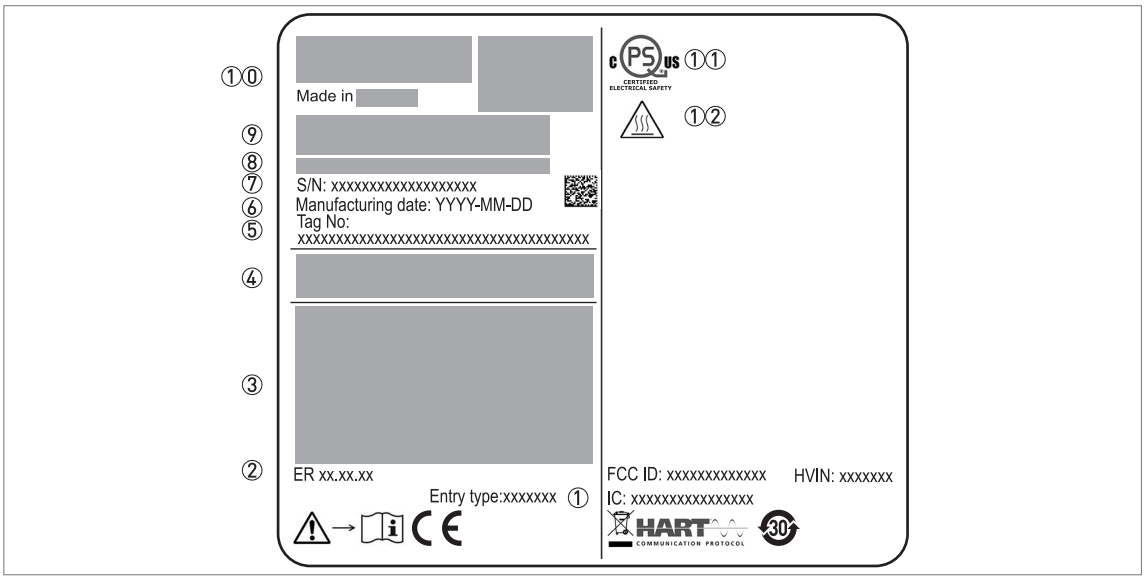

Figure 2-5: Non-Ex nameplate attached to the housing

① Cable entry size
② Electronic revision (according to NAMUR NE 53)
③ Signal output (analog, HART®, fieldbus, etc.), input voltage and maximum current (fieldbus options: basic current)
④ Degree of ingress protection (according to EN 60529 / IEC 60529)
⑤ Customer tag number
⑥ Date of manufacture
⑦ Serial number
⑧ Type code (defined in order). For more data, refer to *Order code* on page 162.
⑨ Model name and number. C = compact version.
①⓪ Company logo, name and postal address
Country of manufacture / Company web address
①① cQPSus electrical safety certification for the USA and Canada. Agrees with NEC and CEC requirements for installation in ordinary locations.
①② WARNING! Hot surface. If the device is connected to tank that operates at high temperature, there is a risk of injury.

3.1 General notes on installation

INFORMATION!
Inspect the packaging carefully for damages or signs of rough handling. Report damage to the carrier and to the local office of the manufacturer.

INFORMATION!
Do a check of the packing list to make sure that you have all the elements given in the order.

INFORMATION!
Look at the device nameplate to ensure that the device is delivered according to your order. Check for the correct supply voltage printed on the nameplate.

3.2 Storage

WARNING!
Do not keep the device in a vertical position. This will damage the antenna and the device will not measure correctly.

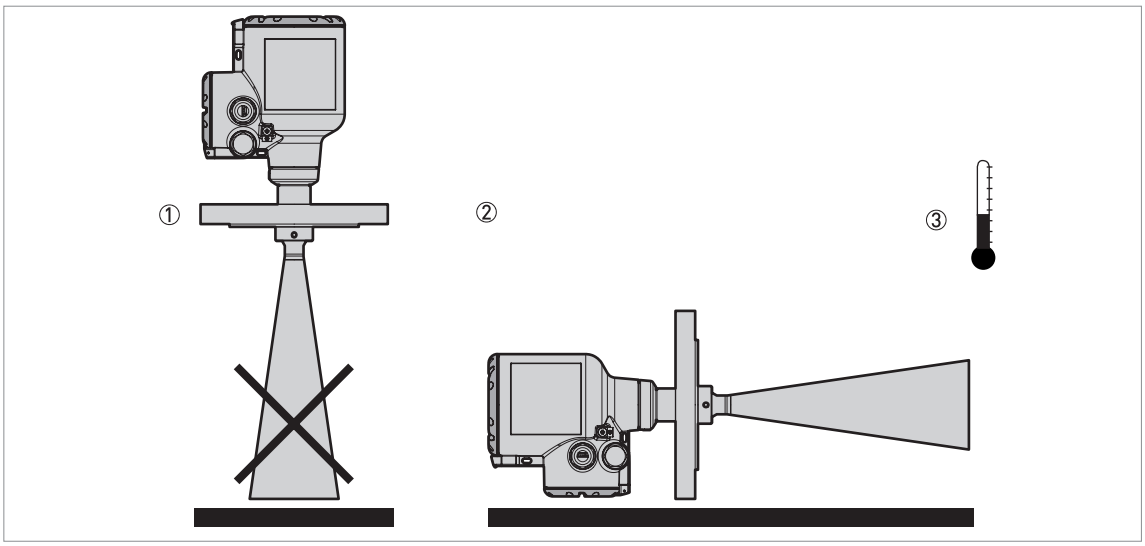

Figure 3-1: Storage conditions

① When you put the device into storage, do not keep it in a vertical position.
② Put the device on its side. We recommend that you use the packaging in which it was delivered.
③ Storage temperature range: -40...+85°C / -40...+185°F

- Store the device in a dry and dust-free location.
- Keep the converter out of the sunlight.
- Store the device in its original packing.

3.3 Transport

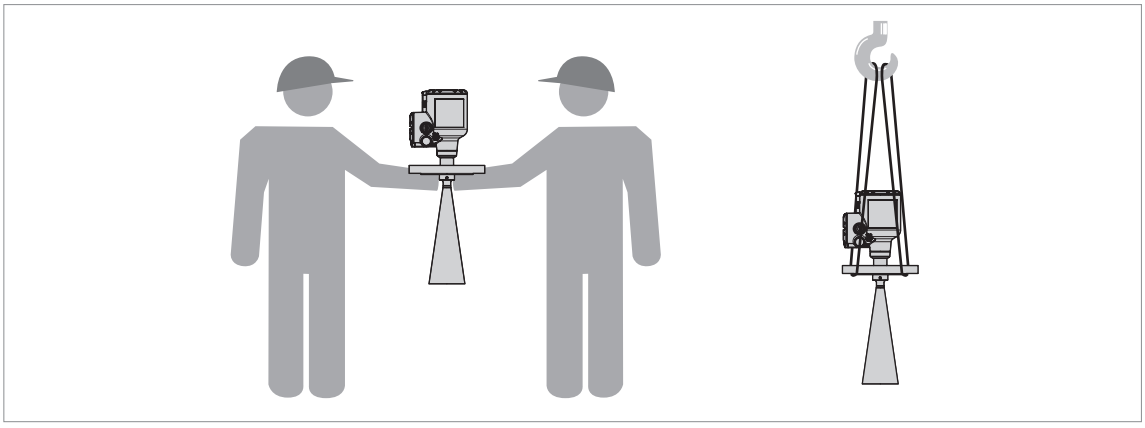

Figure 3-2: How to lift the device

WARNING!
Lift the device carefully to prevent damage to the antenna. If you remove the signal converter to lift the device, do not interchange this part with a different signal converter. This can have an effect on the performance of the device.

3.4 Pre-installation requirements

INFORMATION!
Obey the precautions that follow to make sure that the device is correctly installed.

- Make sure that there is sufficient space on all sides.
- Protect the signal converter from direct sunlight. If necessary, install the weather protection accessory.
- Do not subject the signal converter to heavy vibrations. The devices are tested for vibration and agree with EN 50178 and IEC 60068-2-6.

3.5 Pressure and temperature ranges

WARNING!
The process connection temperature range must agree with the temperature limits of the gasket material. The operating pressure range is subject to the process connection used and the flange temperature.

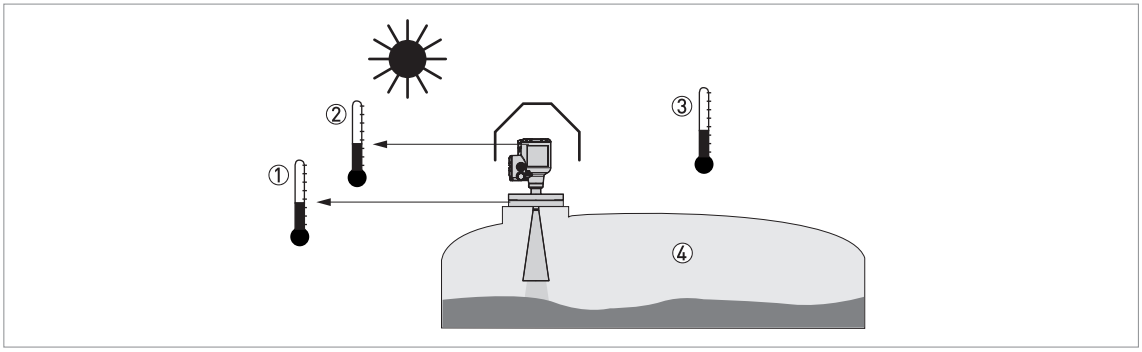

Figure 3-3: Pressure and temperature ranges

① Temperature at the process connection
Non-Ex devices: The temperature range depends on the type of antenna, process connection and the seal material. Refer to the table that follows.
Devices with Hazardous Location approvals: see supplementary instructions

② Ambient temperature for operation of the display
-20...+70°C / -4...+158°F
If the ambient temperature is not between these limits, then it is possible that the display screen will not operate temporarily. The device continues to measure level and send an output signal.

③ Ambient temperature
Non-Ex devices: -40...+80°C / -40...+176°F
Devices with Hazardous Location approvals: see supplementary instructions

④ Process pressure
Depends on the type of antenna and process connection. Refer to the table that follows.

Maximum process connection temperature and operating pressure

Antenna type	Maximum process connection temperature		Maximum operating pressure	
	[°C]	[°F]	[barg]	[psig]
PP Drop	+100	+212	16	232
PTFE Drop	+130	+266	16	232
Metallic Horn	+130 ①	+266 ①	16	232

① The maximum process connection temperature must agree with the temperature limits of the gasket material

For more data on pressure ratings, refer to *Guidelines for maximum operating pressure* on page 137.

3.6 Recommended mounting position

CAUTION!
Follow these recommendations to make sure that the device measures correctly. They have an effect on the performance of the device.

We recommend that you prepare the installation when the tank is empty.

3.6.1 General notes

Recommended nozzle position for solids

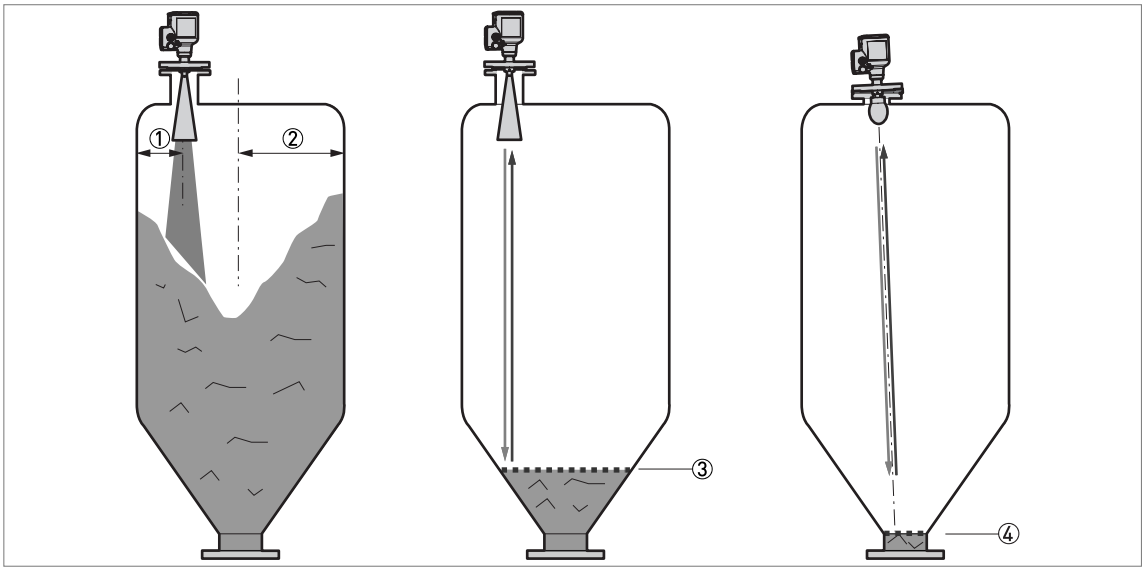

Figure 3-4: Recommended nozzle position for solids

① Position of the process fitting from the silo wall, r/2 (for DN80, DN100, DN150 or DN200 horn antennas, and DN80, DN100 or DN150 Drop antennas)
② Radius of the silo, r
③ The minimum measured level for a device without a 2° slanted PP flange option or orientation system (max. 30°)
④ The minimum measured level for a device with a 2° slanted PP flange option or orientation system (max. 30°)

INFORMATION!
If there is a nozzle on the tank before installation, the nozzle must be a minimum of 200 mm / 7.9" from the tank wall. The tank wall must be flat and there must not be obstacles adjacent to the nozzle or on the tank wall.

Point the device in the correct direction to get the best performance

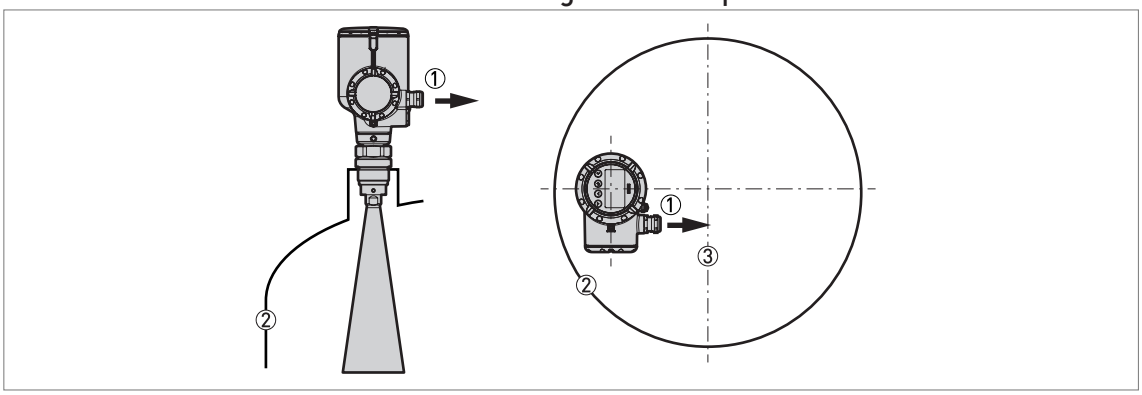

Figure 3-5: Point the device in the correct direction to get the best performance

① Cable entry
② Nearest tank wall
③ Tank centerline

Point the cable entries on the housing in the direction of the tank centerline.

Number of devices that can be operated in a silo

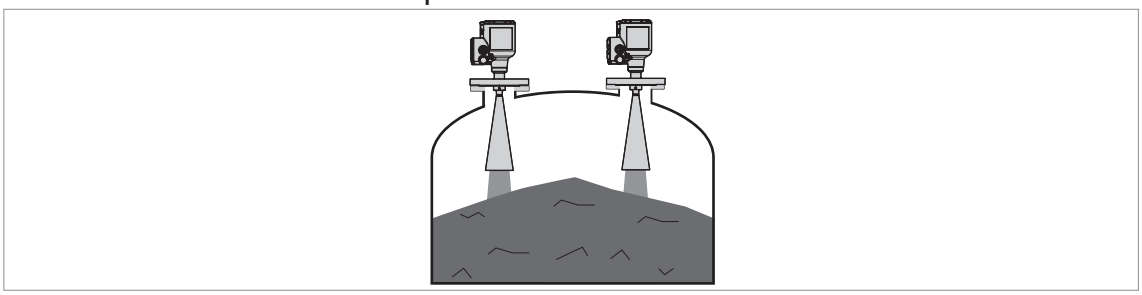

Figure 3-6: There is no maximum limit to the number of devices that can be operated in the same silo

There is no maximum limit to the number of devices that can be operated in the same silo. They can be installed adjacent to other radar level transmitters.

3.6.2 Tanks with dish-shaped and conical bottoms

Dish-shaped or conical bottoms have an effect on the measuring range. The device cannot measure to the bottom of the tank. If possible, install the device as shown in the illustration that follows:

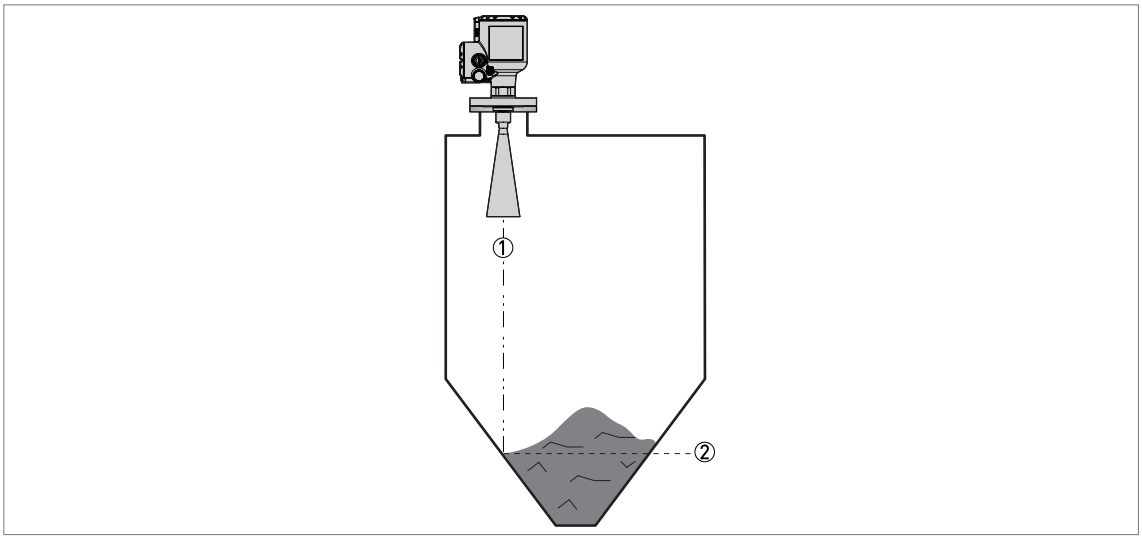

Figure 3-7: Tanks with dish-shaped or conical bottoms

① Axis of radar beam
② Minimum level reading

3.7 Mounting restrictions

CAUTION!
Follow these recommendations to make sure that the device measures correctly. They have an effect on the performance of the device.

We recommend that you prepare the installation when the tank is empty.

3.7.1 General notes

LPR and TLPR devices

WARNING!
LPR (Level Probing Radar) *devices measure level in the open air or in a closed space (a metallic tank etc.).* ***TLPR (Tank Level Probing Radar)*** *devices measure level in a closed space only. You can use LPR devices for TLPR applications. For more data, refer to Radio approvals on page 9.*

Causes of interference signals

- Objects in the tank or silo.
- Sharp corners that are perpendicular to the path of the radar beam.
- Sudden changes in tank diameter in the path of the radar beam.

CAUTION!
Do not install the device above objects in the silo (ladder, supports etc.) or pit. Objects in the silo or pit can cause interference signals. If there are interference signals, the device will not measure correctly.
If it is not possible to install the device on another part of the silo or pit, do an empty spectrum scan.

Equipment and obstacles: how to prevent measurement of interference signals

Do not put the device immediately above equipment and obstacles in a silo or pit. This can have an effect on the performance of the device.

INFORMATION!
If possible, do not install a nozzle on the silo centerline.

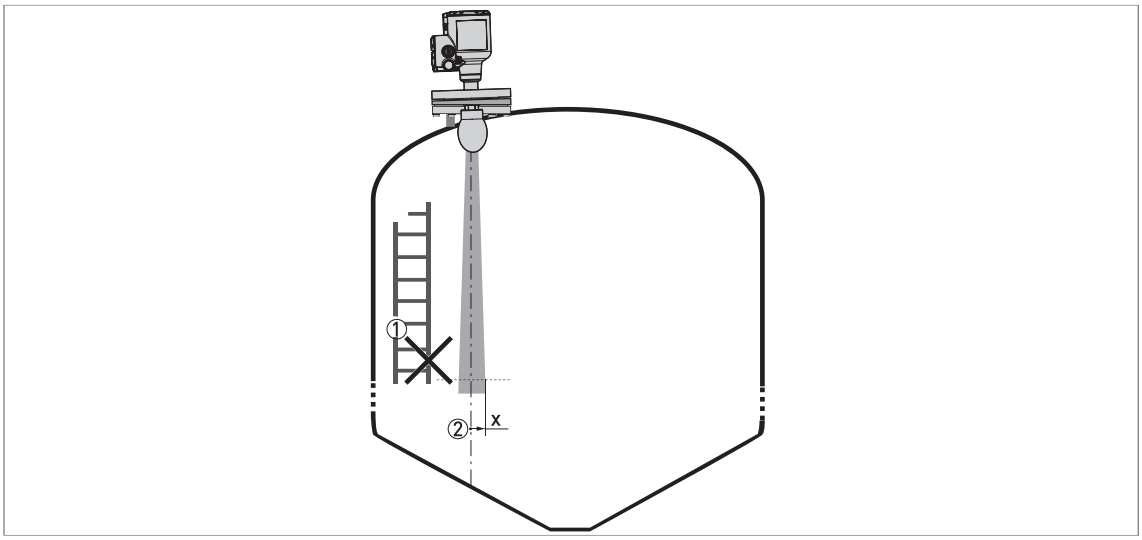

Figure 3-8: Equipment and obstacles: how to prevent measurement of interference signals

① We recommend that you do an empty spectrum recording if there are too many obstacles in the radar beam (for more data, refer to *Empty spectrum recording* on page 101).

② Beam radius of the antenna: refer to the table below. The beam radius increases by increments of "x" mm for each metre of distance from the antenna.

Beam radius of the antenna

Antenna type	Beam angle	Beam radius, x	
		[mm/m]	[in/ft]
Metallic Horn, DN80 (3¨)	9°	79	0.9
Metallic Horn, DN100 (4¨)	8°	70	0.8
Metallic Horn, DN150 (6¨)	6°	53	0.6
Metallic Horn, DN200 (8¨)	5°	44	0.5
PTFE Drop, DN80 (3¨)	8°	70	0.8
PTFE Drop, DN100 (4¨)	7°	61	0.7
PTFE Drop, DN150 (6¨)	4°	35	0.4
PP Drop DN80 (3¨)	9°	79	0.9
PP Drop, DN100 (4¨)	7°	61	0.7
PP Drop, DN150 (6¨)	5°	44	0.5

Product inlets

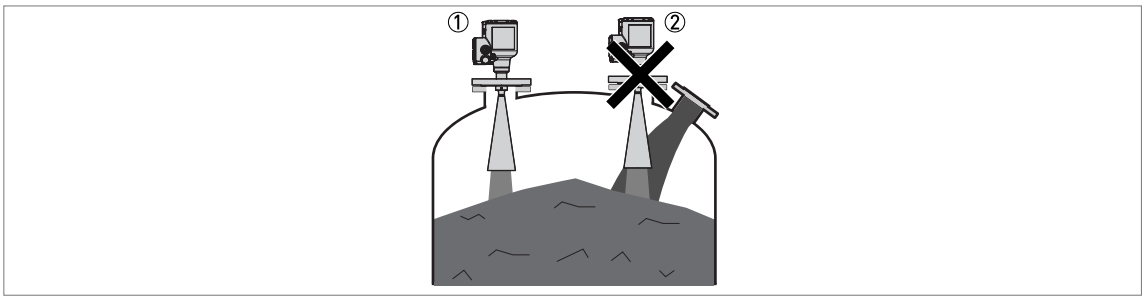

Figure 3-9: Product inlets

① The device is in the correct position.
② The device is too near to the product inlet.

CAUTION!
Do not put the device near to the product inlet. If the product that enters the silo touches the antenna, the device will measure incorrectly. If the product fills the silo directly below the antenna, the device will also measure incorrectly.

INFORMATION!
For more data about the measuring range of each type of antenna, refer to Measuring accuracy on page 135.

3.7.2 Process connections

INFORMATION!
All the procedures that follow are applicable to Metallic Horn and Drop antennas.

Flange connections: installation procedure

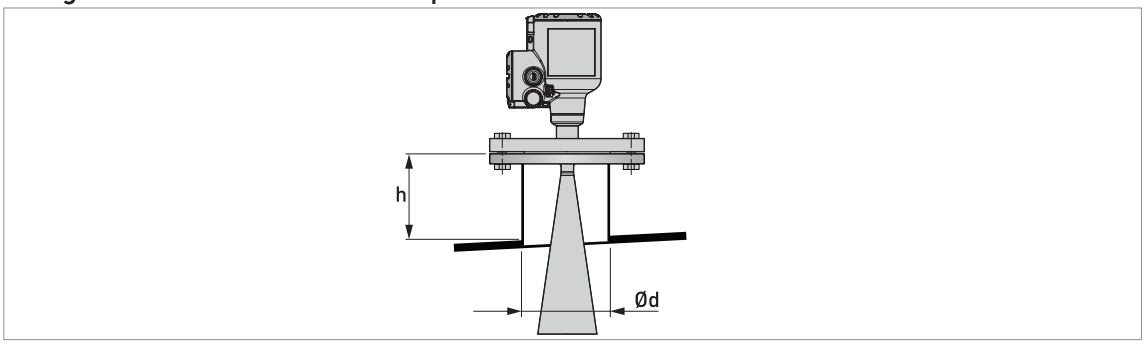

Figure 3-10: Flange connections: installation procedure

Ød = nozzle diameter
h = nozzle height

Recommended nozzle size for flange connections

The nozzle must be as short as possible. Refer to the table below for the maximum height of the nozzle:

Nozzle and antenna diameter, Ød		Maximum nozzle height, h			
		Metallic Horn antenna		Drop antenna	
[mm]	[inch]	[mm]	[inch]	[mm]	[inch]
80	3	260 ①	10.24 ①	60	2.36
100	4	330 ①	12.99 ①	70	2.76
150	6	490 ①	19.29 ①	100	3.94
200	8	660 ①	25.98 ①	—	—

① If the device has antenna extensions, this option extends the maximum nozzle height. Add the length of the antenna extensions attached to the device to this value.

Equipment needed:

- Device
- Flange gasket (not supplied)
- Wrench (not supplied)

If the antenna diameter is smaller than the process connection size (flange):

- Make sure the flange on the nozzle is level.
- Make sure that you use the applicable gasket for the flange dimensions and the process.
- Align the gasket correctly with the flange facing of the nozzle.
- Put the device carefully on the silo flange. Do not attach the device flange to the silo yet
- Make sure that you point the device in the correct direction. For more data, refer to *General notes* on page 25 ("Point the device in the correct direction").
- Tighten the flange bolts. Refer to local rules and regulations for the correct torque to apply to the bolts.

➲ End of the procedure.

If the antenna diameter is larger than the process connection size (flange)

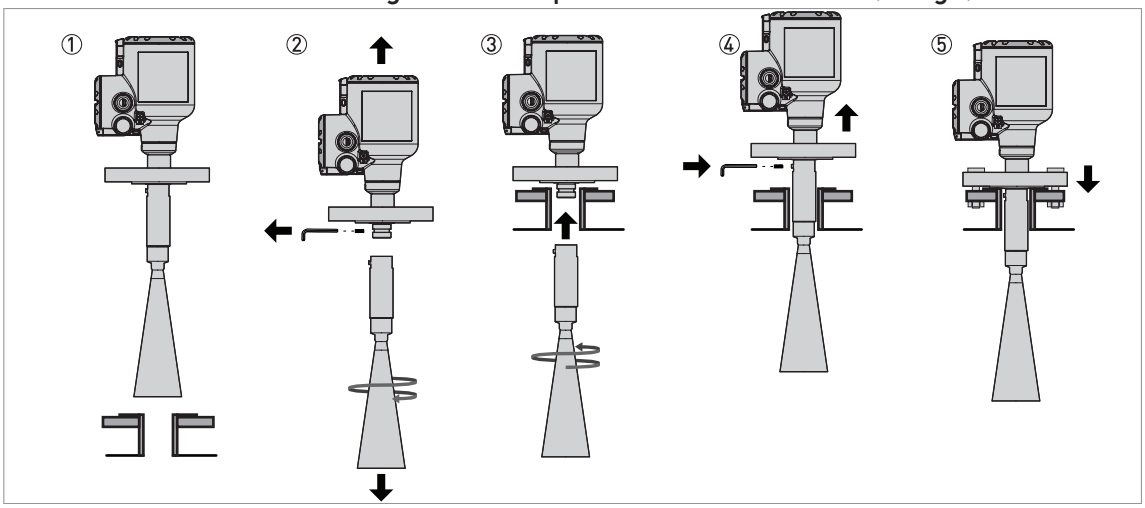

Figure 3-11: How to attach the device if the antenna diameter is larger than the process connection size

Special equipment needed:

- 3 mm Allen wrench (not supplied)

WARNING!
If you attach the antenna in a closed space, make sure that there is a good airflow in the area. Make sure that a person not in the silo can always hear you.

INFORMATION!
If the antenna is larger than the process connection, we recommend that you use an antenna extension. It is possible that there is not sufficient space to tighten the antenna locking screw.

- Make sure the flange on the nozzle is level.
- **Drop antennas without an antenna extension:** Remove the three locking screws with a 3 mm Allen wrench.
- Remove the antenna from the part below the flange (if there are no antenna extensions). If the device has one or more antenna extensions, remove the locking screw from the top antenna extension and remove the antenna and the antenna extensions from the part below the flange.

➲ The antenna is not attached to the device. If the device has a Drop antenna, make sure that the O-ring stays in the groove on the antenna or antenna extension.

- Align the gasket correctly with the flange facing of the nozzle.
- Put the device carefully on the silo flange. Do not attach the device flange to the silo yet.
- Go inside the tank. If you attach the antenna in a closed space, make sure that there is a good airflow in the area.
- Attach the antenna to the part below the flange. We recommend that a person holds the device on the top of the tank.
- Go to the top of the tank. Lift the device a small distance.
- **Drop antennas without an antenna extension:** Attach the three locking screws to the antenna with a 3 mm Allen wrench.
- **Metallic Horn antennas without an antenna extension:** Attach the locking screw to the antenna with a 3 mm Allen wrench.
- **All antennas with one or more antenna extensions:** Attach the locking screw to the top antenna extension with a 3 mm Allen wrench.
- Put the device carefully on the silo flange.
- Make sure that you point the device in the correct direction. For more data, refer to *General notes* on page 25 ("Point the device in the correct direction")..
- Tighten the flange bolts. Refer to local rules and regulations for the correct torque to apply to the bolts.

➲ End of the procedure.

INFORMATION!
Antenna extensions for devices with flanges
If the device has antenna extensions, this option extends the maximum nozzle height. Each antenna extension has a length of 105 mm / 4.1". The maximum number of antenna extensions that can be attached to the device are:

- *Metallic Horn antenna: 10*
- *PP Drop antenna: 5*
- *PTFE Drop antenna: 5*

Threaded connections: installation procedure

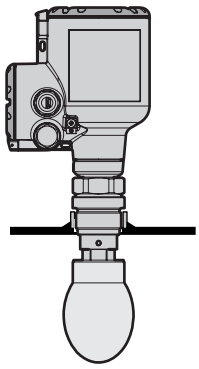

Figure 3-12: Threaded connections: installation procedure

Recommended socket size for threaded connections

The socket must be as short as possible. If the socket is in a recess, then use the maximum limits for nozzle dimensions (flange connections) in this section.

If the device has antenna extensions, this option extends the maximum socket height. Add the length of the antenna extensions attached to the device to this value.

Equipment needed:

- Device
- Gasket for G 1½ connection (not supplied)
- Thread seal tape (PTFE) for 1½ NPT connection (not supplied)
- 50 mm open-end wrench (not supplied)

WARNING!
Do not tighten the process connection to a torque more than 40 N·m / 29.5 lbf·ft. If the connection is too tight, this will damage the thread.
To prevent damage to the antenna, make sure that the minimum diameter of the hole for a 1½ NPT thread connection is not less than 43.4 mm / 1.71¨.

If the antenna is smaller than the process connection (threaded):

- Make sure the tank connection is level.
- **ISO 228-1 (G) connection:** Make sure that you use the applicable gasket for the connection dimensions and the process.
- **ISO 228-1 (G) connection:** Align the gasket correctly.
- **NPT connection:** Wind the thread seal tape around the process connection in agreement with good engineering practice.
- Put the device carefully on the silo process connection.
- Turn the threaded connection on the antenna to attach the device to the process connection.
- Make sure that you point the device in the correct direction. For more data, refer to *General notes* on page 25 ("Point the device in the correct direction")..
- Tighten the connection to the correct torque (not more than 40 N·m / 29.5 lbf·ft).

➲ End of the procedure.

If the antenna is larger than the process connection (threaded)

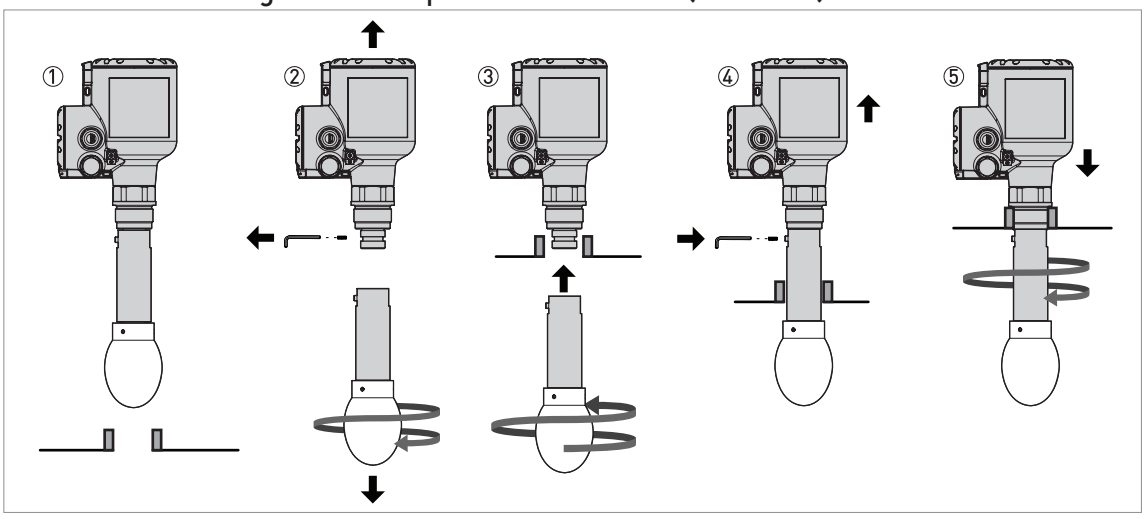

Figure 3-13: How to attach the device if the antenna is larger than the process connection

Special equipment needed:

- 3 mm Allen wrench (not supplied)

WARNING!
If you attach the antenna in a closed space, make sure that there is a good airflow in the area. Make sure that a person not in the silo can always hear you.

INFORMATION!
If the antenna is larger than the process connection, we recommend that you use an antenna extension. It is possible that there is not sufficient space to tighten the antenna locking screw.

- Make sure the silo connection is level.
- **Drop antennas without an extension:** Remove the three locking screws with a 3 mm Allen wrench.
- Remove the antenna from the part below the flange (if there are no antenna extensions). If the device has one or more antenna extensions, remove the locking screw from the top antenna extension and remove the antenna and the antenna extensions from the part below the flange.

➲ The antenna is not attached to the device. If the device has a Drop antenna, make sure that the O-ring stays in the groove on the antenna or antenna extension.

- **ISO 228-1 (G) connection:** Make sure that you use the applicable gasket for the connection dimensions and the process.
- **ISO 228-1 (G) connection:** Align the gasket correctly.
- **NPT connection:** Wind the thread seal tape around the process connection in agreement with good engineering practice.
- Put the device carefully on the silo process connection. Do not attach the threaded connection to the silo yet.
- Go inside the tank. If you attach the antenna in a closed space, make sure that there is good airflow in the area.
- Attach the antenna to the part below the threaded connection. We recommend that a person holds the device on top of the silo.
- Go to the top of the tank. Lift the device a small distance.
- **Drop antennas without an antenna extension:** Attach the three locking screws to the antenna with a 3 mm Allen wrench.

- **Metallic Horn antennas without an antenna extension:** Attach the locking screw to the antenna with a 3 mm Allen wrench.
- **All antennas with one or more antenna extensions:** Attach the locking screw to the top antenna extension with a 3 mm Allen wrench.
- Attach the antenna locking screw to the antenna extension. Tighten the antenna locking screw.
- Attach the device to the silo process connection.
- Tighten the connection to the correct torque (not more than 40 N·m / 29.5 lbf·ft).
- Make sure that you point the device in the correct direction. For more data, refer to *General notes* on page 25 ("Point the device in the correct direction").

➲ End of the procedure.

INFORMATION!
Antenna extensions for devices with threaded connections
If the device has antenna extensions, this option extends the maximum nozzle height. Each antenna extension has a length of 105 mm / 4.1". The maximum number of antenna extensions that can be attached to the device are:

- *Metallic Horn antenna: 10*
- *PP Drop antenna: 5*
- *PTFE Drop antenna: 5*

3.8 How to attach antenna extensions

If the device is not supplied with the antenna attached to the signal converter or antenna extensions are supplied as an accessory after delivery of the device, do the procedures that follow.

Metallic Horn antenna – antenna extensions

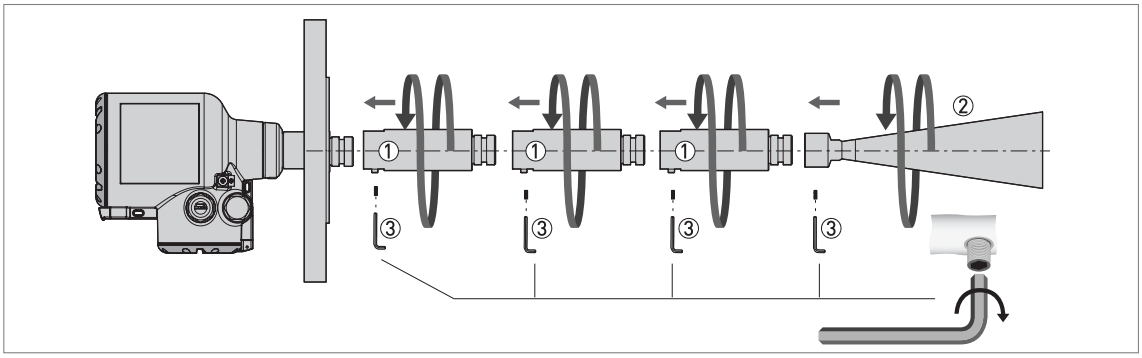

Figure 3-14: Metallic Horn antenna – how to attach antenna extensions

Equipment needed:

- 3 mm Allen wrench (not supplied)
- 36 mm open-end or box-end wrench (not supplied)

CAUTION!
Metallic Horn antennas: *Make sure that there are not more than 10 antenna extensions attached to a device with a Metallic Horn antenna. If there are more than 10 antenna extensions, the device will not measure correctly.*

Procedure 1: How to attach an antenna extension

- Attach the antenna extensions ① below the flange. Use a 36 mm open-end wrench to tighten each antenna extension. Make sure that the antenna extensions ① fully engaged.
- Tighten the locking screw ③ on each antenna extension with a 3 mm Allen wrench.
- Attach the antenna ②. Make sure the antenna is fully engaged.
- Tighten the locking screw ③ on each antenna extension with a 3 mm Allen wrench.
- Use a 3 mm Allen wrench to tighten the locking screws ③.

➲ If the antenna extension is supplied with the device, it is not necessary to change the device settings. End of the procedure.

- If the antenna extension is supplied after delivery of the device, it is necessary to change the device settings. Do the procedure that follows.

Procedure 2: Device settings for a device with an antenna extension

- Push 2 × [>], 2 × [▼] and [>] to go to menu item **Login**.
- Enter the hexadecimal password (default password: 0058).
- Push 2 × [↵], 2 × [▼], 2 × [>], 5 × [▼] and [>] to go to menu item **C1.8 Antenna Extension**.
- Push [>] to change the value. Push [>] to change the position of the cursor. Push [▼] to decrease the value or [▲] to increase the value.

➲ Each antenna extension is 105 mm long. If the device has 3 antenna extensions, they have a total length of 315 mm. In this example, enter the value "315".

- If you changed the antenna extension value, also change the blocking distance value. Push [↵], 3 × [▲], [>] to go to menu item **C1.5 Blocking Distance**.
- Push [>] to change the value. Push [>] to change the position of the cursor. Push [▼] to decrease the value or [▲] to increase the value. Minimum recommended blocking distance = antenna length + (antenna extension length × number of extensions) +0.3 m / 12".
- Push 3 × [↵] to go back to the "Save Configuration?" screen.
- Push [▲] or [▼] to set the screen to **Yes** and push [↵] to store and use the changed settings.

➲ End of the procedure.

Drop antenna – antenna extensions

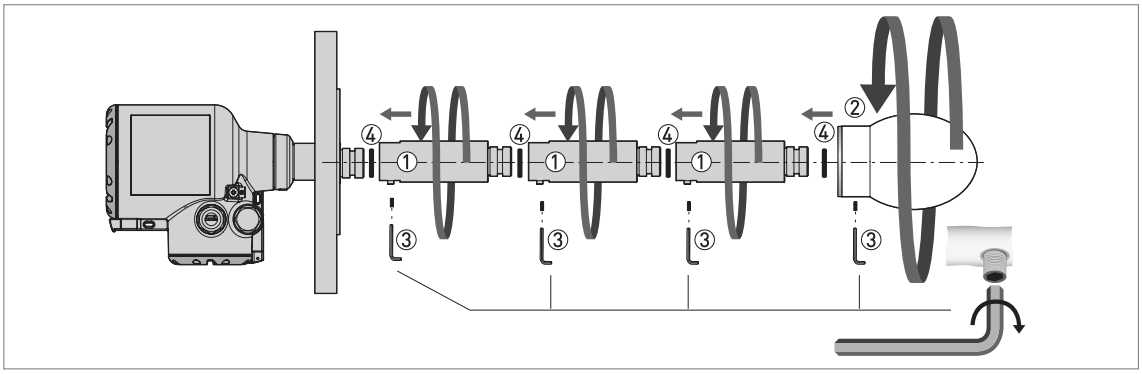

Figure 3-15: Drop antenna – how to attach antenna extensions

CAUTION!
Drop antenna: *Make sure that there are not more than 5 antenna extensions attached to a device with a Drop antenna. If there are more than 5 antenna extensions, the device will not measure correctly.*
Make sure that you put an O-ring ④ into the groove at the top of each antenna extension.

Equipment needed (not supplied):

- 3 mm Allen wrench

- 36 mm open-end or box-end wrench

CAUTION!
Locking screws
The lengths of the locking screws for the antenna extensions and the Drop antenna are different. Make sure that you use the correct screw when you assemble the device. For more data, refer to the list that follows.

Locking screw lengths

- Antenna extension: M6 × 10 (quantity: 1 per each segment of the antenna extension)
- DN80 (3¨) Drop antenna: M6 × 16 (quantity: 3)
- DN100 (4¨) Drop antenna: M6 × 20 (quantity: 3)
- DN150 (6¨) Drop antenna: M6 × 40 (quantity: 3)

Procedure 1: How to attach an antenna extension

① Remove the O-rings from the plastic sachet supplied with the device. Put an O-ring ④ into the groove at the top of each antenna extension.
② Attach the antenna extensions ① below the flange. Use a 36 mm open-end wrench to tighten each antenna extension. Make sure that the antenna extensions ① fully engaged.
③ Tighten the locking screw ③ on each antenna extension with a 3 mm Allen wrench.
④ Attach the antenna ②. Tighten the antenna.
⑤ Make sure the antenna extensions ① and the antenna ② are fully engaged.
⑥ Use a 3 mm Allen wrench to tighten the locking screws ③. NOTE: The antenna has 3 locking screws.
➲ If the antenna extension is supplied with the device, it is not necessary to change the device settings. End of the procedure.

⑦ If the antenna extension is supplied after delivery of the device, it is necessary to change the device settings. Do the procedure that follows.

Procedure 2: Device settings for a device with an antenna extension

- Push 2 × [>], 2 × [▼] and [>] to go to menu item **Login**.
- Enter the hexadecimal password (default password: 0058)
- Push 2 × [↵], 2 × [▼], 2 × [>], 5 × [▼] and [>] to go to menu item **C 1.8 Antenna Extension**.
- Push [>] to change the value. Push [>] to change the position of the cursor. Push [▼] to decrease the value or [▲] to increase the value.

➲ Each antenna extension is 105 mm long. If the device has 3 antenna extensions, they have a total length of 315 mm. In this example, enter the value "315".

- If you changed the antenna extension value, also change the blocking distance value. Push [↵], 3 × [▲], [>] to go to menu item **C1.5 Blocking Distance**.
- Push [>] to change the value. Push [>] to change the position of the cursor. Push [▼] to decrease the value or [▲] to increase the value. Minimum recommended blocking distance = antenna length + (antenna extension length × number of extensions) + 0.3 m / 12¨.
- Push 3 × [↵] to go back to the "Save Configuration?" screen.
- Push [▲] or [▼] to set the screen to **Yes** and push [↵] to store and use the changed settings.

➲ End of the procedure.

3.9 Orientation system (accessory)

3.9.1 How to attach the orientation system to the device

If it is necessary to tilt the antenna at the product with angle more than 2° from the vertical axis, attach an orientation system to the device. This part is available as an accessory for devices with threaded connections. The orientation system has a low pressure flange to attach the device to silo.

WARNING!
If the orientation system is attached to the device, do not pressurize the silo. Use only at atmospheric pressure.

Device with a metallic horn antenna

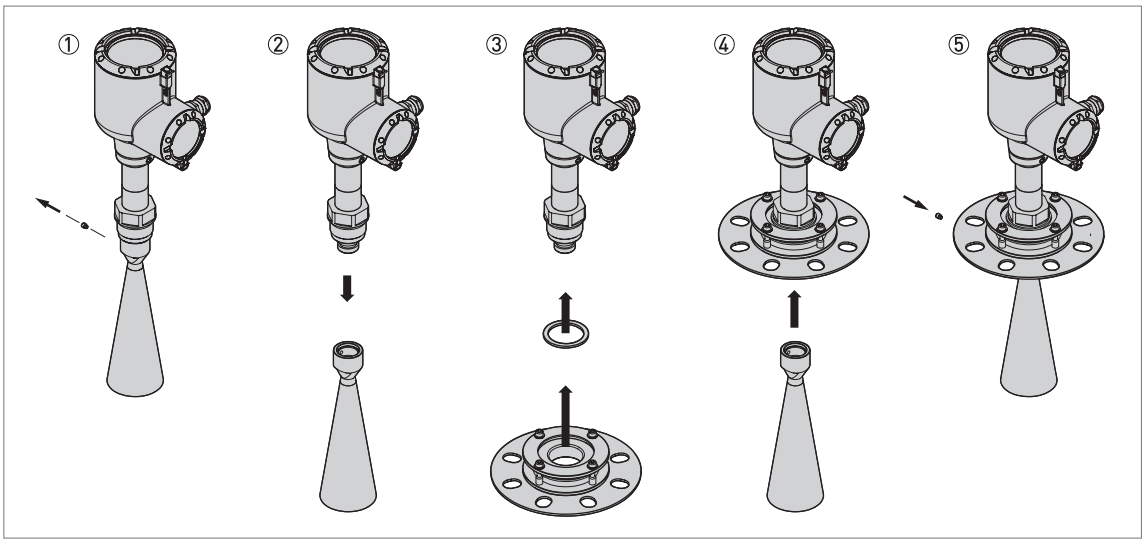

Figure 3-16: Device with a metallic horn antenna

Equipment needed:

- Device
- Orientation system (accessory)
- **ISO 228-1 (G) connection:** Gasket (not supplied)
- **NPT connection:** PTFE threaded seal tape (not supplied)
- **G 1½ or 1½ NPT connection:** 50 mm open-end wrench (not supplied)
- **G 3 or 3 NPT connection:** 65 mm open-end wrench (not supplied)
- 3 mm Allen wrench (not supplied)

WARNING!
Do not tighten the process connection to a torque more than 40 N·m / 29.5 lbf·ft. If the connection is too tight, this will damage the thread.

- If the device does not have an antenna extension, remove the locking screw from the top of the antenna with a 3 mm Allen wrench. If the device has one or more antenna extensions, remove the locking screw from the top antenna extension and remove the antenna and the antenna extensions from the part below the flange.
- Remove the antenna from the part below the flange (if there are no antenna extensions).

➲ The antenna is not attached to the device.

- **ISO 228-1 (G) connection:** Make sure that you use the applicable gasket for the connection dimensions and the process. Align the gasket correctly. Put the device carefully on the orientation system. Turn the threaded connection to attach the device to the orientation system. Tighten the connection to the correct torque (not more than 40 N·m / 29.5 lbf·ft) with a 50 mm (G 1½) or 65 mm (G 3) open-end wrench.
- **NPT connection:** Wind the thread seal tape around the process connection of the device in agreement with good engineering practice. Put the device carefully on the orientation system. Turn the threaded connection to attach the device to the orientation system. Tighten the connection to the correct torque (not more than 40 N·m / 29.5 lbf·ft) with a 50 mm (1?½ NPT) or 65 mm (3 NPT) open-end wrench.
- Attach the antenna.
- Attach and tighten the locking screw.

➲ End of the procedure.

Device with a Drop antenna

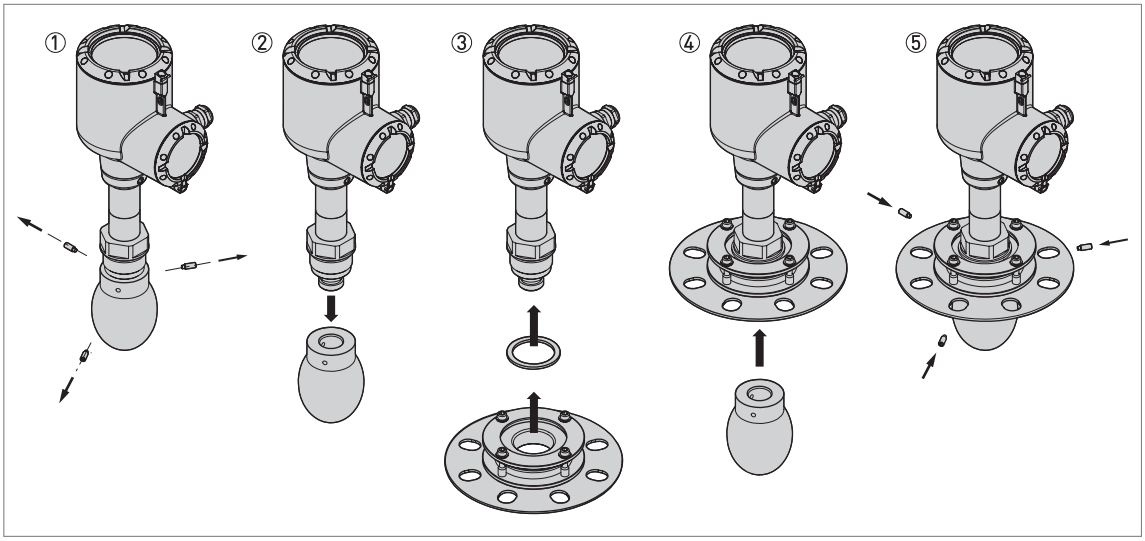

Figure 3-17: Device with a Drop antenna

Equipment needed:

- Device
- Orientation system (accessory)
- **ISO 228-1 (G) connection:** Gasket (not supplied)
- **NPT connection:** PTFE threaded seal tape (not supplied)
- **G 1½ or 1½ NPT connection:** 50 mm open-end wrench (not supplied)
- **G 3 or 3 NPT connection:** 65 mm open-end wrench (not supplied)
- 3 mm Allen wrench (not supplied)

WARNING!
Do not tighten the process connection to a torque more than 40 N·m / 29.5 lbf·ft. If the connection is too tight, this will damage the thread.

- If the device does not have an antenna extension, remove the three locking screws from the top of the antenna with a 3 mm Allen wrench. If the device has one or more antenna extensions, remove the locking screw from the top antenna extension and remove the antenna and the antenna extensions from the part below the flange.
- Remove the antenna from the part below the flange (if there are no antenna extensions).

➲ The antenna is not attached to the device. Make sure that the O-ring stays in the groove on the process connection.

- **ISO 228-1 (G) connection:** Make sure that you use the applicable gasket for the connection dimensions and the process. Align the gasket correctly. Put the device carefully on the orientation system. Turn the threaded connection to attach the device to the orientation system. Tighten the connection to the correct torque (not more than 40 N·m / 29.5 lbf·ft) with a 50 mm (G 1½) or 65 mm (G 3) open-end wrench.
- **NPT connection:** Wind the thread seal tape around the process connection of the device in agreement with good engineering practice. Put the device carefully on the orientation system. Turn the threaded connection to attach the device to the orientation system. Tighten the connection to the correct torque (not more than 40 N·m / 29.5 lbf·ft) with a 50 mm (1½ NPT) or 65 mm (3 NPT) open-end wrench.
- Attach the antenna. Make sure that the O-ring stays in the groove on the process connection.
- Attach and tighten the locking screw.

➲ End of the procedure.

INFORMATION!
If the antenna diameter is larger than the process connection, refer to Process connections on page 30.

INFORMATION!
If it is necessary to send an order for the orientation system, refer to Accessories: process connection kits on page 174.

3.9.2 How to tilt the device

If you must measure a product which does not have a level surface then attach an orientation system and tilt the device to get a good measurement signal. You can tilt the device to a maximum angle of 30° from the vertical axis.

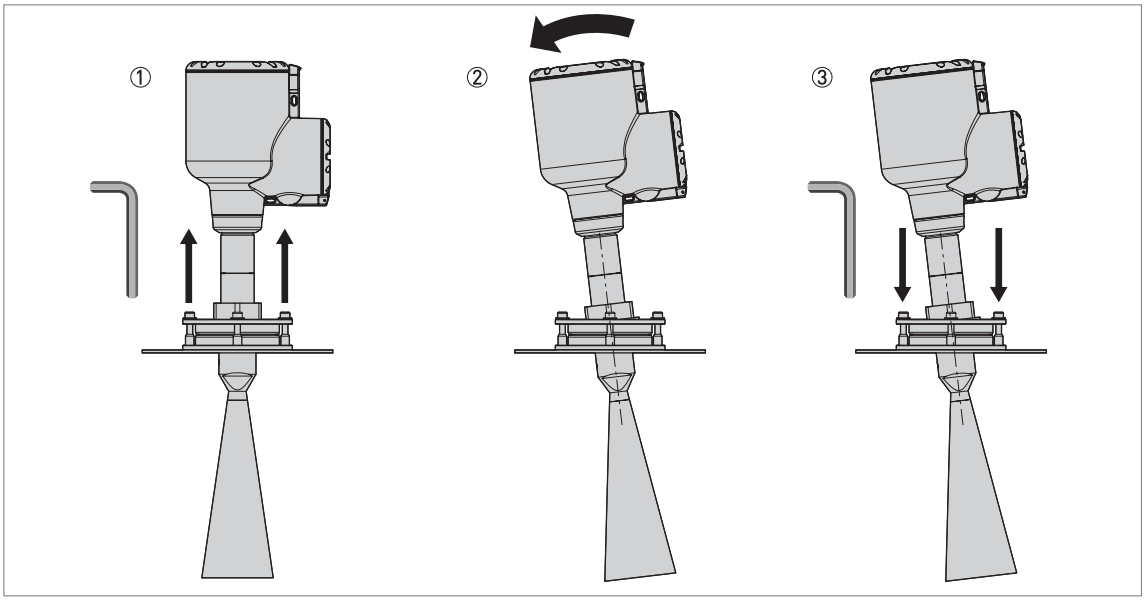

Figure 3-18: How to tilt the device

Equipment needed:

- 5 mm Allen wrench (not supplied)

- Loosen the 4 socket head screws around the orientation system with a 5 mm Allen wrench.
- Tilt the device to the correct angle.
- Tighten the 4 socket head screws. This step locks the orientation system to prevent movement.

3.10 How to turn or remove the display module (option)

If there is an object adjacent to the device that makes it difficult to read the display, you can rotate the display in increments of 90°.

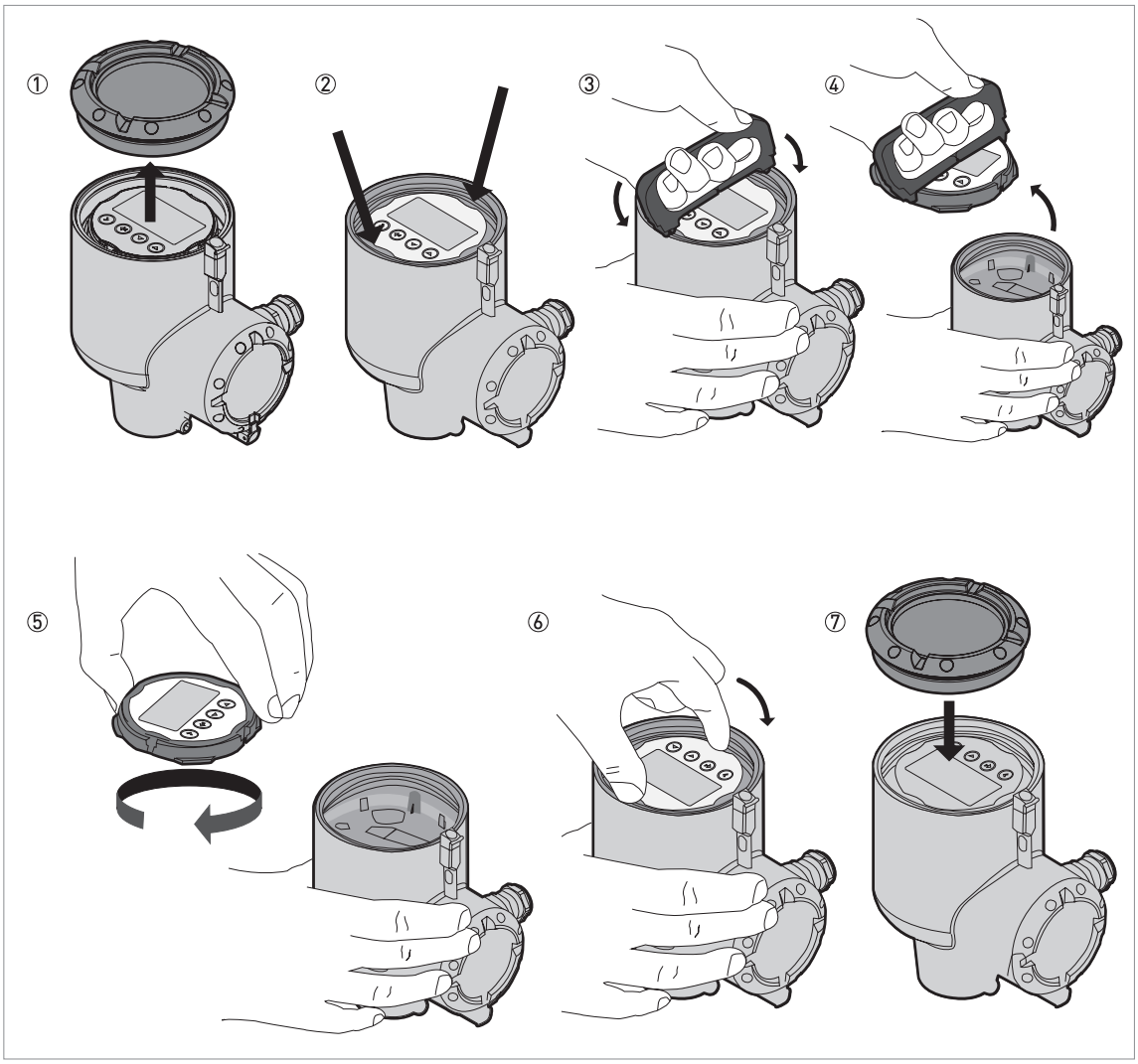

Figure 3-19: How to turn or remove the display module (option)

Equipment needed:

- Cover wrench
- Display extractor

CAUTION!
Disconnect the power supply.

Follow this procedure:

- Remove the housing cover with the cover wrench.
- Find the two clips that hold the display module in the housing.

- Use the display extractor to remove the display module from the housing. Put the display extractor in the slots on the module for these clips.
- Carefully remove the display module from housing and then remove the display extractor from the display module.
- Turn the display module until it points to the user.
- Put the display module back on the electronics block. If the clips make a click, then the display module is correctly attached to the electronics block.
- Make sure that the housing cover has a gasket. Attach the cover to the housing and tighten it by hand.

➲ End of the procedure.

INFORMATION!
The cover wrench and display extractor are supplied with the device. If it is necessary to send an order for the cover wrench or the display extractor, refer to Accessories: general items on page 173.

3.11 Weather protection

3.11.1 How to attach the weather protection to the device

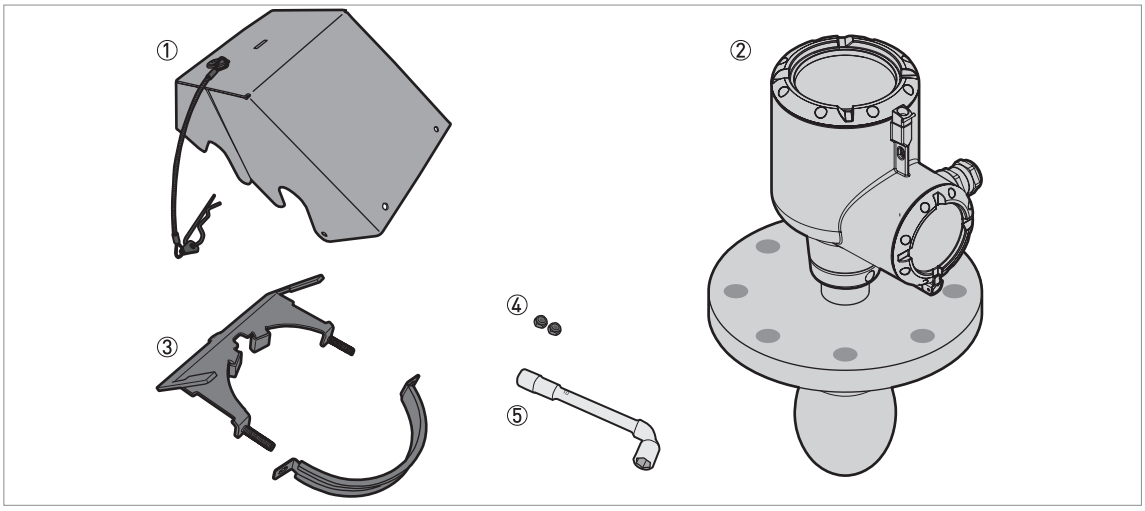

Figure 3-20: Equipment needed to assemble the weather protection

① Weather protection cover (with an R-clip to hold the cover on the clamp)
② Device
③ Weather protection clamp (2 parts)
④ 2 locking nuts
⑤ 10 mm socket wrench (not supplied)

The overall dimensions of the weather protection are on page 139.

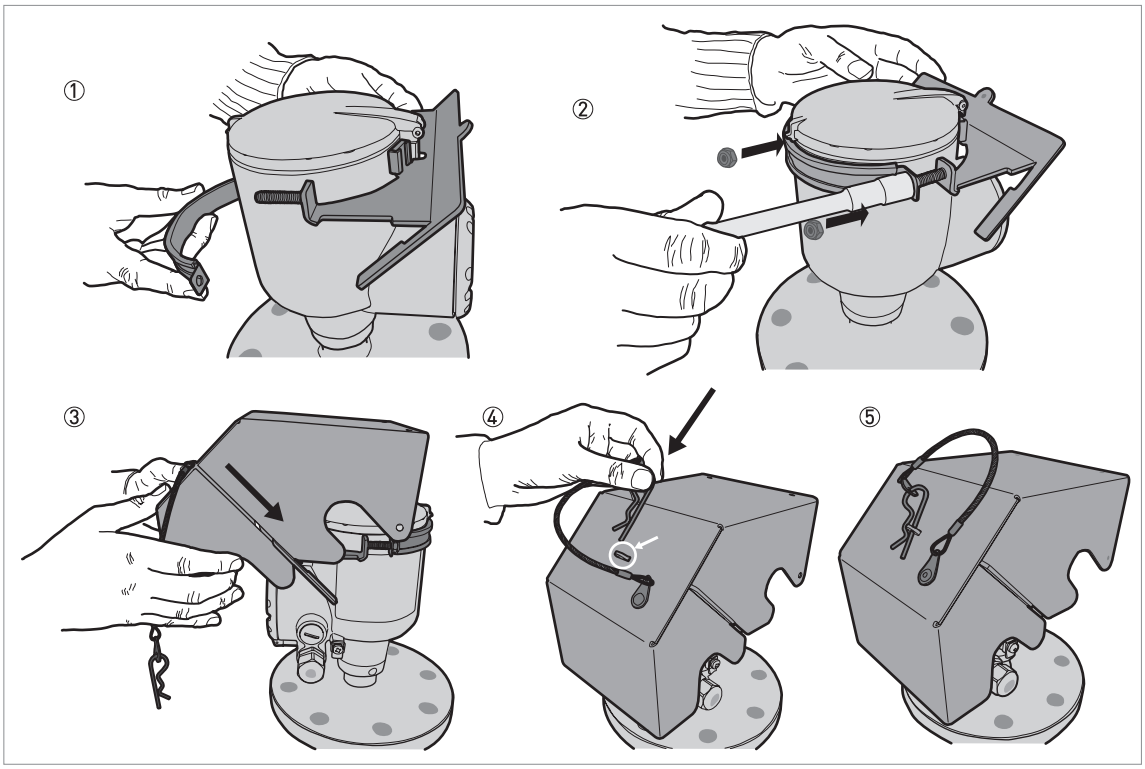

Figure 3-21: Installation of the weather protection

① Put the weather protection clamp around the top of the device.
② Attach the two locking nuts to the threads on the weather protection clamp. Tighten the locking nuts with a 10 mm socket wrench.
③ Lower the weather protection cover onto weather protection clamp until the hole for the lock is in the slot at the front of the cover.
④ Put the R-clip into the hole at the front of the weather protection cover.
⑤ End of the procedure.

3.11.2 How to open the weather protection

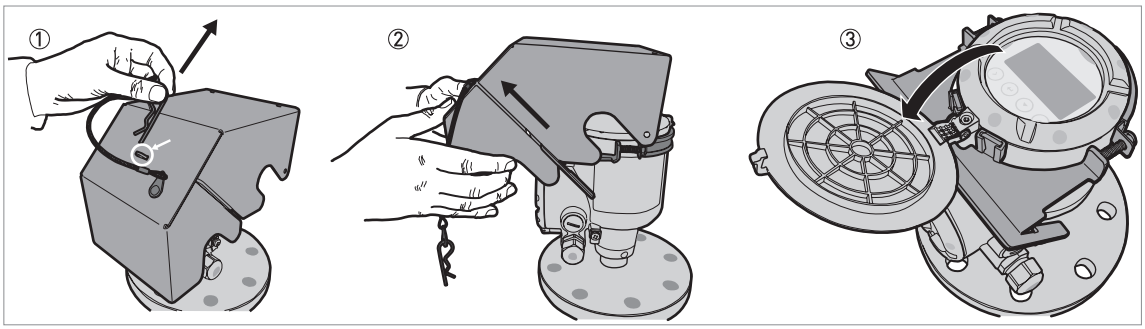

Figure 3-22: How to open the weather protection

① Remove the R-clip from the hole at the front of the weather protection cover.
② Remove the weather protection cover.
③ Lift the display screen cover. End of the procedure.

4.1 Safety instructions

DANGER!
All work on the electrical connections may only be carried out with the power disconnected. Take note of the voltage data on the nameplate!

DANGER!
Observe the national regulations for electrical installations!

DANGER!
For devices used in hazardous areas, additional safety notes apply; please refer to the Ex documentation.

WARNING!
Observe without fail the local occupational health and safety regulations. Any work done on the electrical components of the measuring device may only be carried out by properly trained specialists.

INFORMATION!
Look at the device nameplate to ensure that the device is delivered according to your order. Check for the correct supply voltage printed on the nameplate.

4.2 General notes

This chapter includes electrical connection data about devices with the 4...20 mA output and HART® communication options. These are 2-wire, loop-powered devices.

INFORMATION!
Devices with the FOUNDATION™ fieldbus output option:
For electrical connection data, refer to the "Description of FOUNDATION™ fieldbus interface" supplementary instructions.

INFORMATION!
Devices with the PROFIBUS PA output option:
For electrical connection data, refer to the "Description of PROFIBUS PA interface" supplementary instructions.

4.3 Electrical installation: output options with cable gland

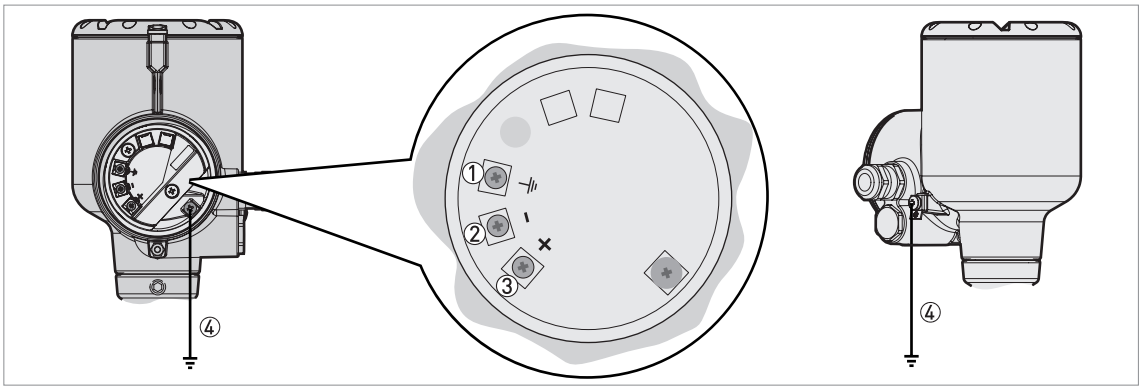

Figure 4-1: Terminals for electrical installation: standard cable gland

① Grounding terminal in the housing (if the electrical cable is shielded)
② Current output -
③ Current output +
④ Location of the external grounding terminal (at the bottom of the converter)

INFORMATION!
Electrical power to the output terminal energizes the device. The output terminal is also used for HART® communication.

CAUTION!
- *Use the applicable electrical cables with the cable glands.*
- *Make sure that the current is not more than 5 A or that there is 5 A-rated fuse in the electrical circuit that energizes the device.*

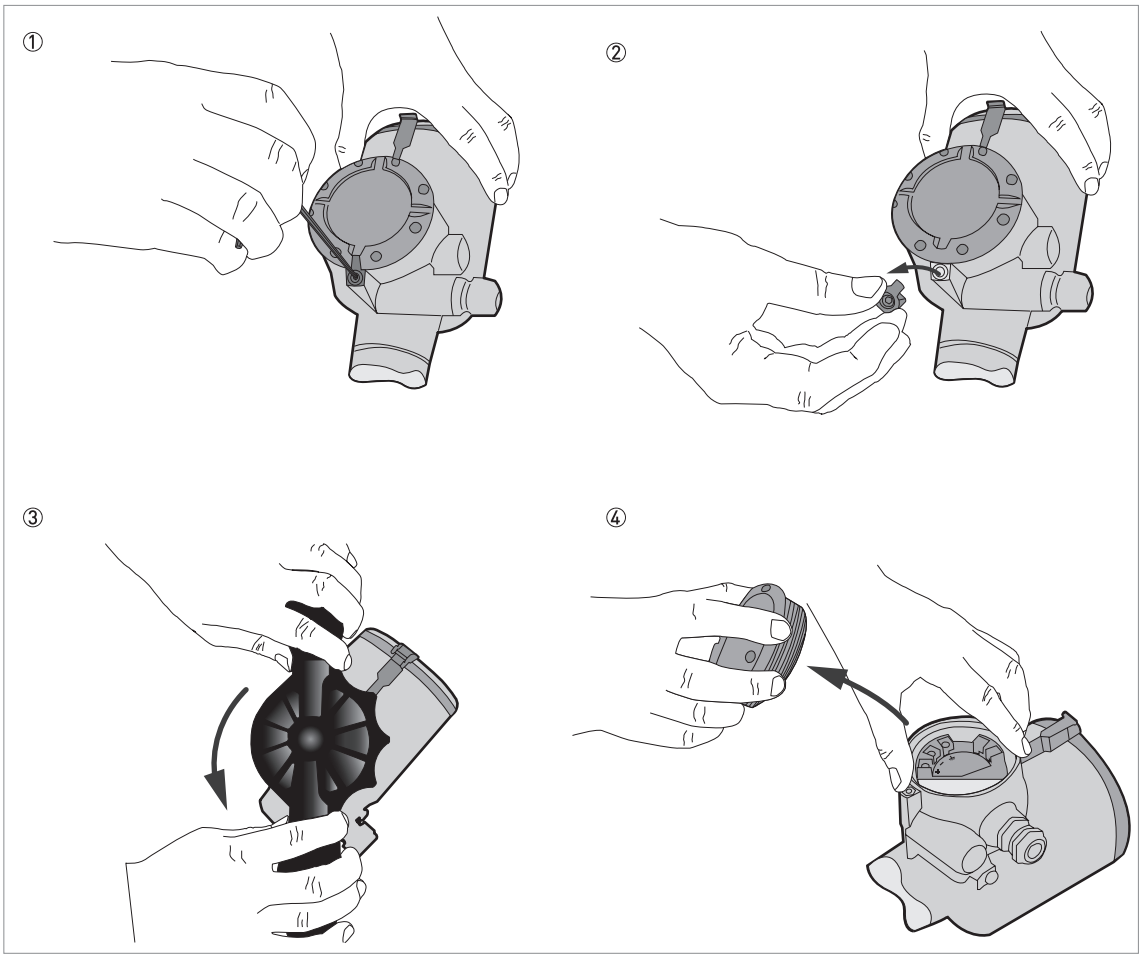

Figure 4-2: How to open the terminal compartment cover

Equipment needed:

- 3 mm Allen wrench (not supplied)
- Cover wrench

Procedure

① Loosen the lock screw with a 3 mm Allen wrench.
② Remove the cover stop.
③ Turn the cover counterclockwise with the cover wrench.
④ Remove the cover.

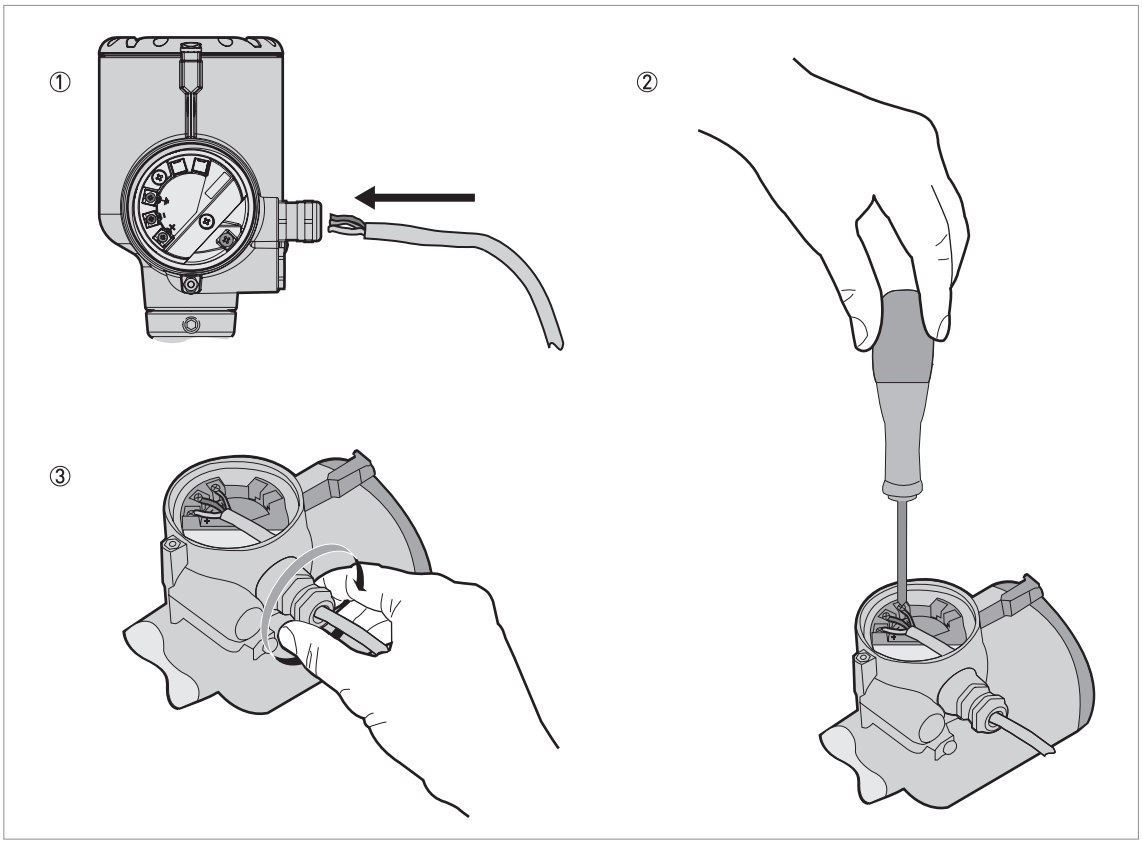

Figure 4-3: Procedure for electrical installation

Equipment needed:

- POZIDRIV® PZ1 screwdriver (not supplied)

Procedure

① Loosen the cable gland. Put the electrical wires into the cable entry. Loosen the terminal screws with a POZIDRIV® PZ1 screwdriver. Connect the electrical wires to the connector.
② Tighten the terminal screws with a POZIDRIV® PZ1 screwdriver.
③ Tighten the cable gland.

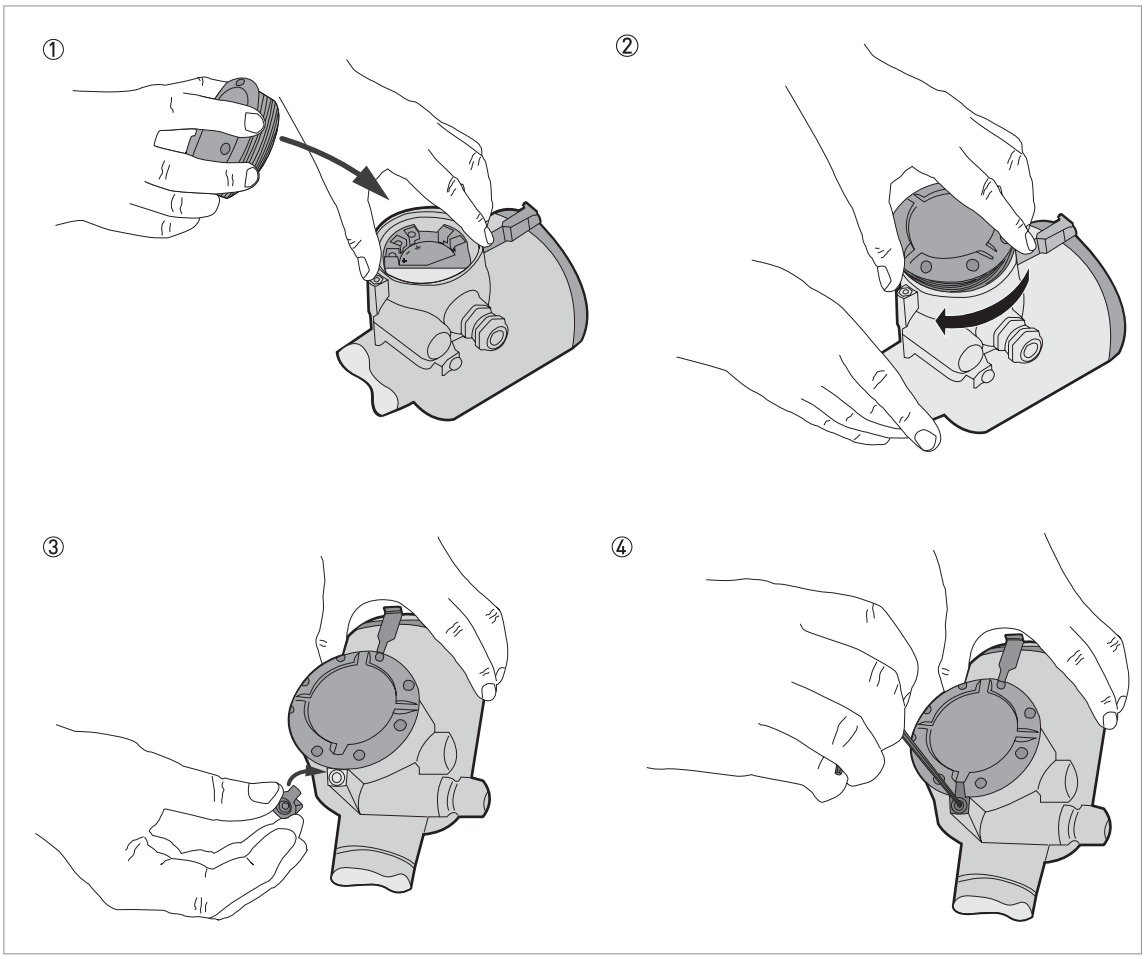

Figure 4-4: How to close the terminal compartment cover

Equipment needed:

- 3 mm Allen wrench (not supplied)

① Put the cover on the housing
② Turn the cover clockwise until it is fully engaged.
③ Attach the cover stop and lock screw.
④ Tighten the lock screw with a 3 mm Allen wrench.

4.4 Electrical installation: output options with an M12 male connector

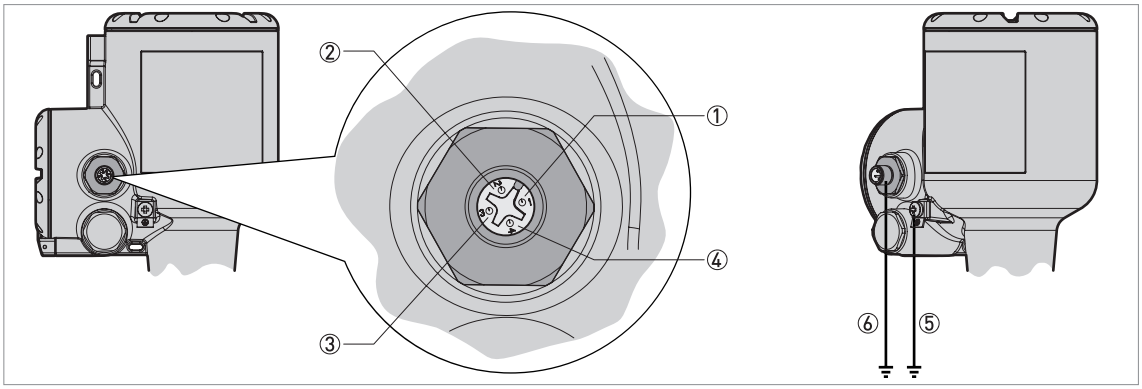

Figure 4-5: Terminals for electrical installation: 4-pin male M12 connector

① Pin 1: current output +
② Pin 2: not connected
③ Pin 3: current output -
④ Pin 4: not connected
⑤ Grounding terminal (external thread of the connector)
⑥ Location of the external grounding terminal (at the bottom of the converter)

INFORMATION!
Electrical power to the output terminal energizes the device. The output terminal is also used for HART® communication.

CAUTION!
- *Use the applicable electrical cables and a 4-pin female M12 connector.*
- *Make sure that the current is not more than 5 A or that there is 5 A-rated fuse in the electrical circuit that energizes the device.*

4.5 Electrical connection for current output

4.5.1 Non-Ex devices

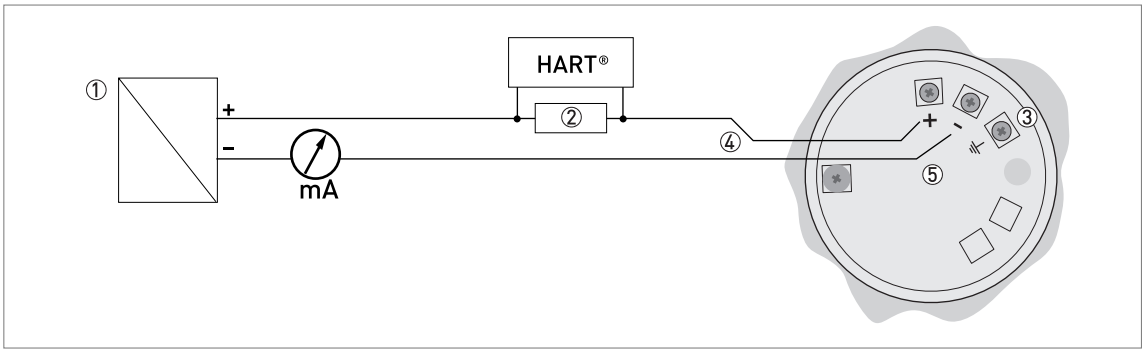

Figure 4-6: Electrical connections for non-Ex devices

① Power supply
② Resistor for HART® communication (typically 250 ohms)
③ Optional connection to the grounding terminal
④ Output: 12...30 VDC for an output of 21.5 mA at the terminal
⑤ Device

4.5.2 Devices for hazardous locations

DANGER!
For electrical data for device operation in hazardous locations, refer to the related certificates of compliance and supplementary instructions (ATEX, IECEx etc.). This documentation can be downloaded from the website (Download Center).

4.6 Ingress protection

INFORMATION!
The ingress protection of the device agrees with the conditions that are necessary for IP66 / IP68 (0.1 barg / 1.45 psig), as given in International Standard IEC 60529.

DANGER!
Make sure that the cable gland is watertight.

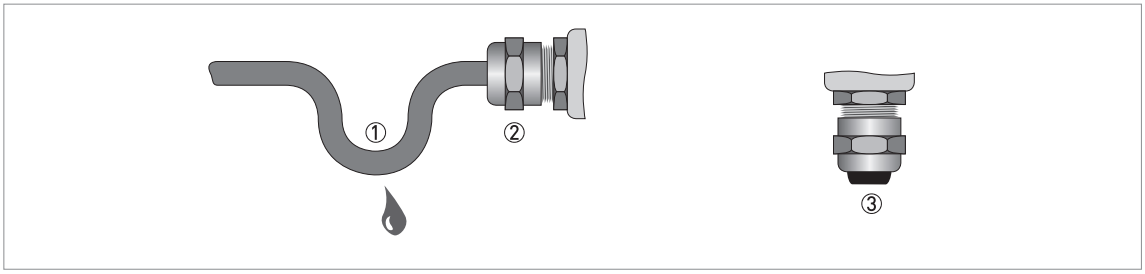

Figure 4-7: How to make the installation agree with protection category IP68

- Make sure that the gaskets are not damaged.
- Make sure that the electrical cables are not damaged.
- Make sure that the electrical cables agree with the national electrical code.
- The cables are in a loop in front of the device ① so water does not go into the housing.
- Tighten the cable glands ②.
- Close unused cable glands with dummy plugs ③.

The diameter of the outer sheath of the electrical cable (for the power supply and current output) must be 6…10 mm or 0.24…0.39¨.

4.7 Networks

4.7.1 General information

The device uses the HART® communication protocol. This protocol agrees with the HART® Communication Foundation standard. The device can be connected point-to-point. It can also have a polling address of 1 to 63 in a multi-drop network.

The device output is factory-set to communicate point-to-point. To change the communication mode from **point-to-point** to **multi-drop**, refer to *HART®* network configuration on page 103.

4.7.2 Point-to-point connection

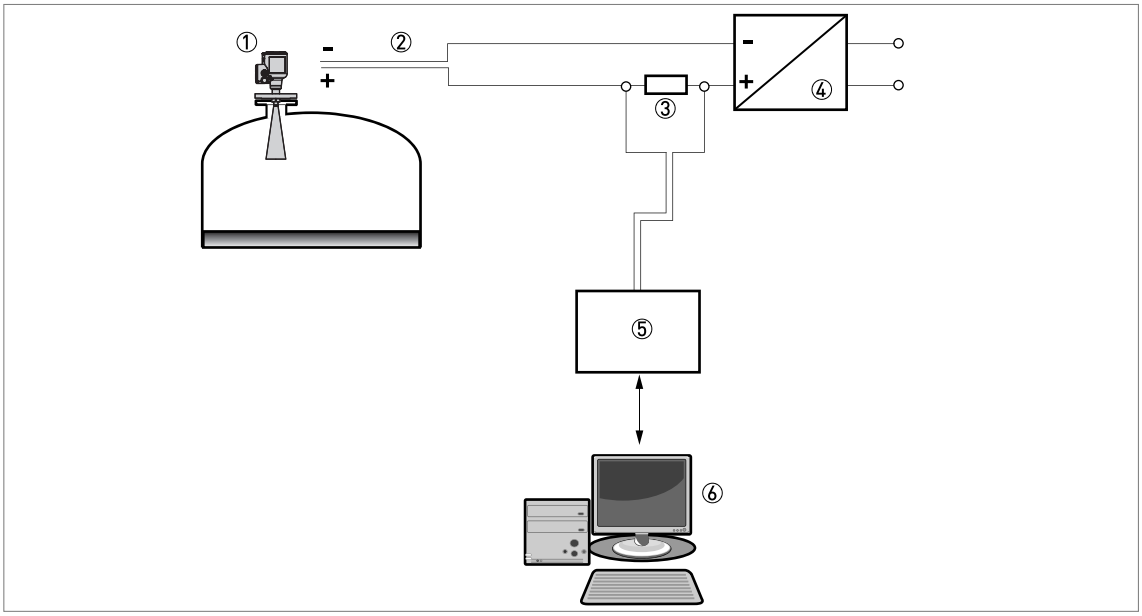

Figure 4-8: Point-to-point connection (non-Ex)

① Address of the device (0 for point-to-point connection)
② 4...20 mA + HART®
③ Resistor for HART® communication (typically 250 ohms)
④ Power supply
⑤ HART® converter
⑥ HART® communication software

4.7.3 Multi-drop networks

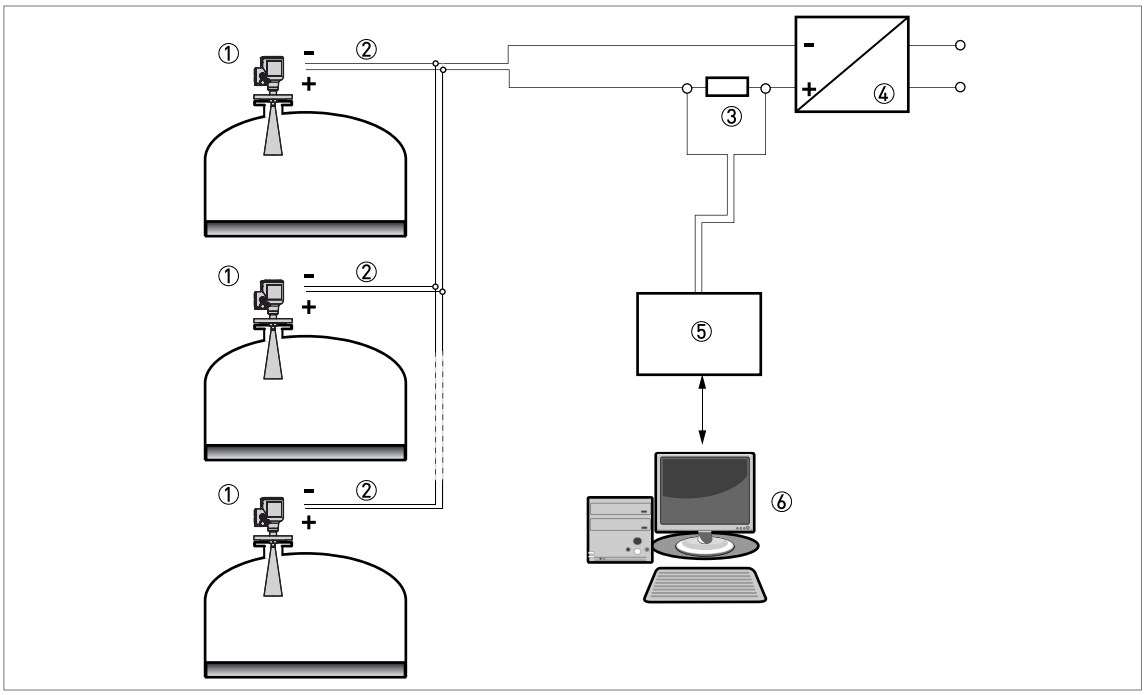

Figure 4-9: Multi-drop network (non-Ex)

① Address of the device (each device must have a different address in multidrop networks)
② 4 mA + HART®
③ Resistor for HART® communication (typically 250 ohms)
④ Power supply
⑤ HART® converter
⑥ HART® communication software

5.1 Start-up checklist

Check these points before you energize the device:

- Are all the wetted components (antenna, flange and gaskets) chemically resistant to the product in the silo?
- Does the information on the signal converter nameplate agree with the operating data?
- Did you correctly install the device on the silo?
- Do the electrical connections agree with the national electrical codes? Use the applicable electrical cables with the cable glands.

DANGER!
Before you energize the device, make sure that the supply voltage and polarity are correct.

DANGER!
If the device has a Hazardous Locations approval, make sure that the device and the installation agrees with the requirements of the certificate of compliance.

5.2 How to start the device

- Connect the converter to the power supply.
- Energize the converter.

➲ **Devices with the LCD display option only:** After 10 seconds the screen will display "Optiwave 6400" and the logo of the supplier. After 40 seconds the default screen will appear. The device will show measurement data. Measurements agree with specifications given in the customer order.

CAUTION!
*If the manufacturer received data about the installation, the device will display readings correctly. If not, go to sub-menu **A.4 Application Assistant** in the configuration menu to select the correct settings.*

5.3 Operating concept

You can read measurements and configure the device with:

- A digital display screen (optional).
- A connection to a system or PC with PACTware™. You can download the Device Type Manager (DTM) file from the website.
- A connection to a system or PC with AMS™. You can download the Device Description (DD) file from the website.
- A connection to a HART® Field Communicator. You can download the Device Description (DD) file from the website.

5.4 Digital display screen

If you remove the housing cover, you can push the buttons on the keypad. If you cannot remove the housing cover, you can operate the keypad with a bar magnet. For more data, refer to *Keypad buttons* on page 57.

5.4.1 Display screen layout

Display in Normal mode

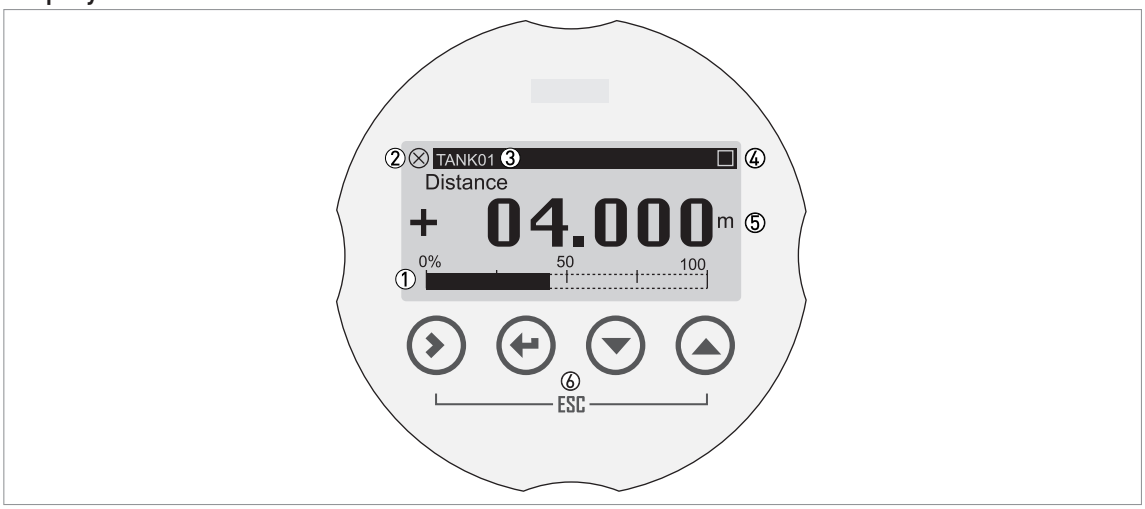

Figure 5-1: Display screen layout in Normal mode (measurement data)

① Current output percentage (bar graph)
② Device status (NAMUR NE 107 symbols)
③ Device tag name
④ Keypad operation indicator (shown when you push a button or operate the keypad with a bar magnet)
⑤ Measurement value and units
⑥ Keypad buttons with Hall effect sensors (sensors sensitive to large changes in magnetic field strength)

The output percentage bar graph is only shown if you set "One Value and Bar" or "Two Values and Bar" in menu items C6.4.1 **Function** (1st Meas. page) or C6.5.1 **Function** (2nd Meas. Page). If menu item C6.4.2 1st Value Variable (1st Meas. page) is set to "Level", then the device shows "Level" as the current output percentage in Normal mode (refer to item ① in the illustration).

Display in Program mode

Figure 5-2: Display screen layout in Program mode

① Menu number or menu item number
② Location (menu) of sub-menu or menu item
③ Menu item name

5.4.2 Keypad buttons

Functions of keypad buttons

Keypad button	Symbol	Function
[Right]	[>]	**Normal mode:** Enter Program mode
		Program mode: **Menu:** Enter the sub-menu or menu item **Menu item:** Move cursor one digit to the right (this includes the decimal point). If the cursor is on the last digit, a push of this button will move the cursor to the first digit.
[Return]	[↵]	**Normal mode:** None
		Program mode: **Menu:** Exit the menu. If you are in the top level menu, the device goes back to Normal mode. **Menu item:** Confirm change and exit the menu item.
+ [Escape]	[>]+[▲]	**Normal mode:** None
		Program mode: **Menu:** Exit the menu. **Menu item:** Exit the menu item. This step also cancels the change made to the setting in the menu item.
[Down]	[▼]	**Normal mode:** Change screen (measurement pages 1 and 2 and the status message page)
		Program mode: Decrease value or change parameter
[Up]	[▲]	**Normal mode:** Change screen (measurement pages 1 and 2 and the status message page)
		Program mode: Increase value or change parameter

For more data on keypad functions, refer to *Keypad functions* on page 69.

How to push the keypad buttons with your hand

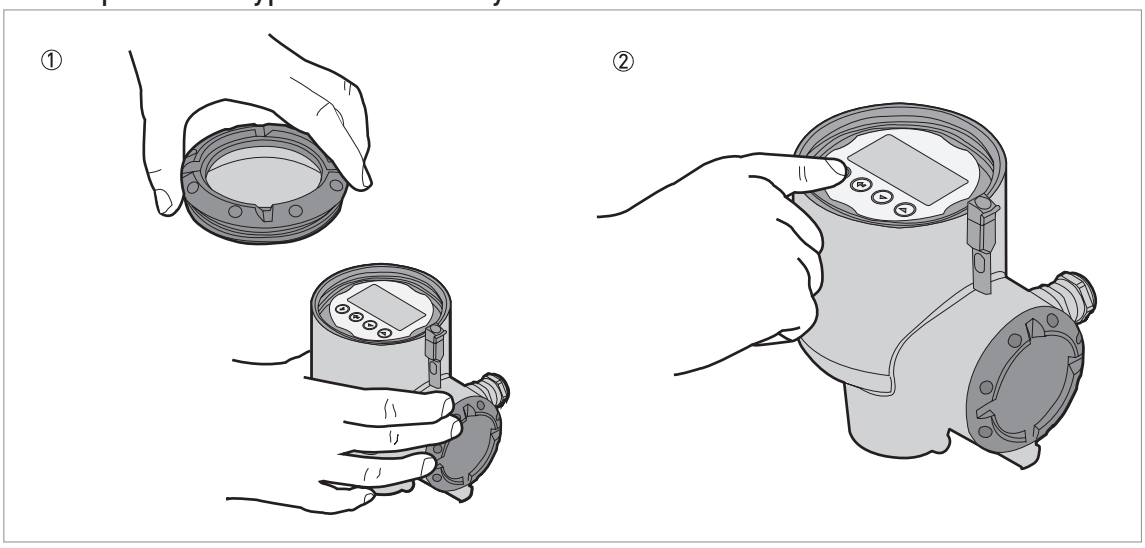

Figure 5-3: How to push the keypad buttons with your hand

Equipment needed

- Cover wrench

① Remove the housing cover with the cover wrench supplied with the device.
② Push the buttons on the keypad.
➲ This will operate the device.

How to operate the keypad buttons with a bar magnet

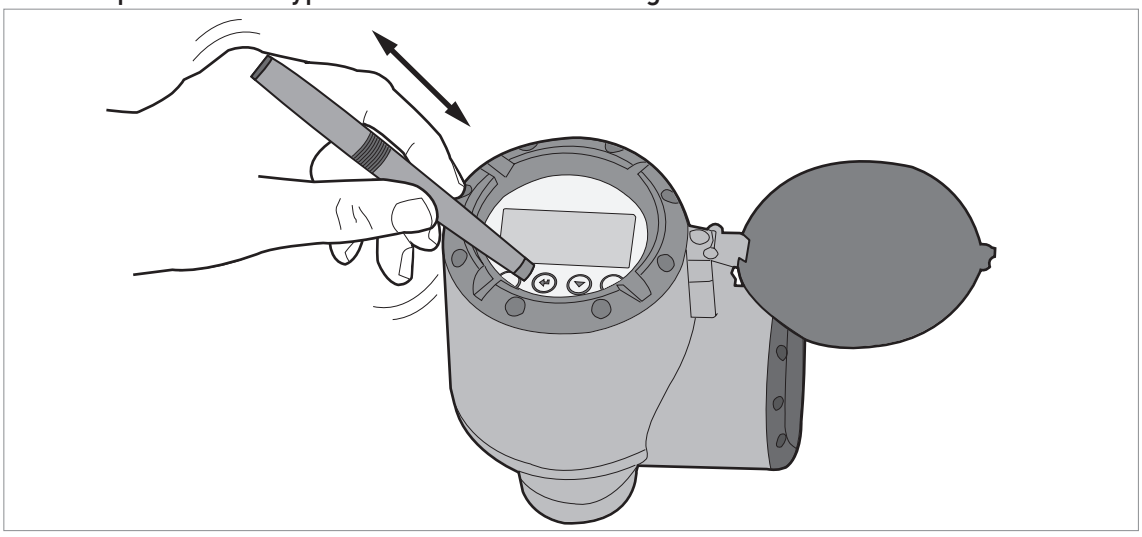

Figure 5-4: How to operate the keypad buttons with a bar magnet

Equipment needed

- Bar magnet

INFORMATION!
It is not necessary to remove the display housing cover to do this procedure.

- Hold the bar magnet near to a keypad button.

➲ The keypad button will operate. If you must operate the button more than one time, remove the bar magnet and then hold it near to the button again.

5.5 Remote communication with PACTware™

PACTware™ displays measurement information clearly and lets you configure the device from a remote location. It is an Open Source, open configuration software for all field devices. It uses Field Device Tool (FDT) technology. FDT is a communication standard for sending information between the system and the field device. This standard agrees with IEC 62453. Field devices are easily integrated. Installation is supported by a user-friendly Wizard.

Install these software programs and equipment:

- Microsoft® .NET Framework version 2.0 or later.
- PACTware.
- HART® converter (USB, RS232...).
- The Device Type Manager (DTM) for the device.

You can download the latest version of PACTware™ and the DTM from our website.

Refer also to the PACTware Consortium site at http://www.pactware.com.

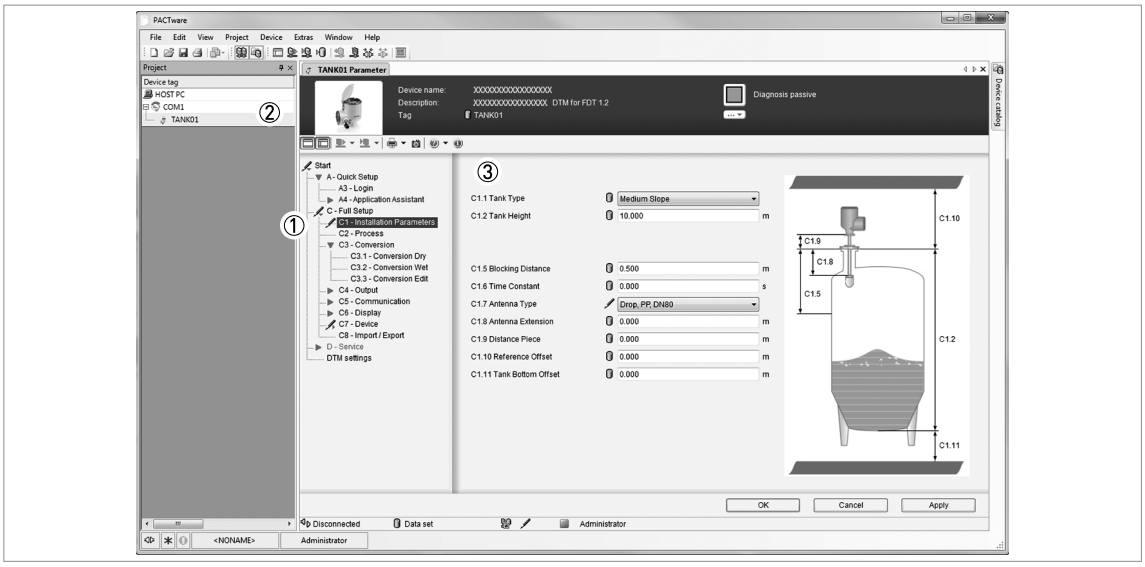

Figure 5-5: Screen from the PACTware™ user interface

① DTM menu
② Information for device identification
③ Installation parameters menu and menu items

5.6 Remote communication with the AMS™ Device Manager

The AMS™ Device Manager is an industrial Plant Asset Management (PAM) software tool. Its role is to:

- Store configuration information for each device.
- Store and read process data.
- Store and read diagnostic status information.
- Help plan preventive maintenance to reduce a plant's downtime to a minimum.

You can download the DD file from our website.

6.1 User modes

Normal mode

This mode shows measurement data and status messages. For more data about measurements, refer to *Normal mode* on page 61. For more data about status messages, refer to *Status messages and diagnostic data* on page 112.

Program mode

Use this mode to read and change parameters, commission the device, create tables for volume or mass measurement, and change critical values to measure in difficult process conditions. To change settings in Program mode, you must use the device with the correct access level (user, operator or expert). For more data about menu items, refer to *Function description* on page 78.

All users can read the settings in Program mode, but only users with "Operator" and "Expert" access levels can change settings. For more data about access levels, refer to *Protection of the device settings (access levels)* on page 66.

6.2 Normal mode

This mode shows measurement data. Use the display keypad to change the type of measurement data shown on the screen and to read the device status messages.

There are 5 options to show the measurement data on the display screen. Refer to the illustration that follows:

Measurement data options

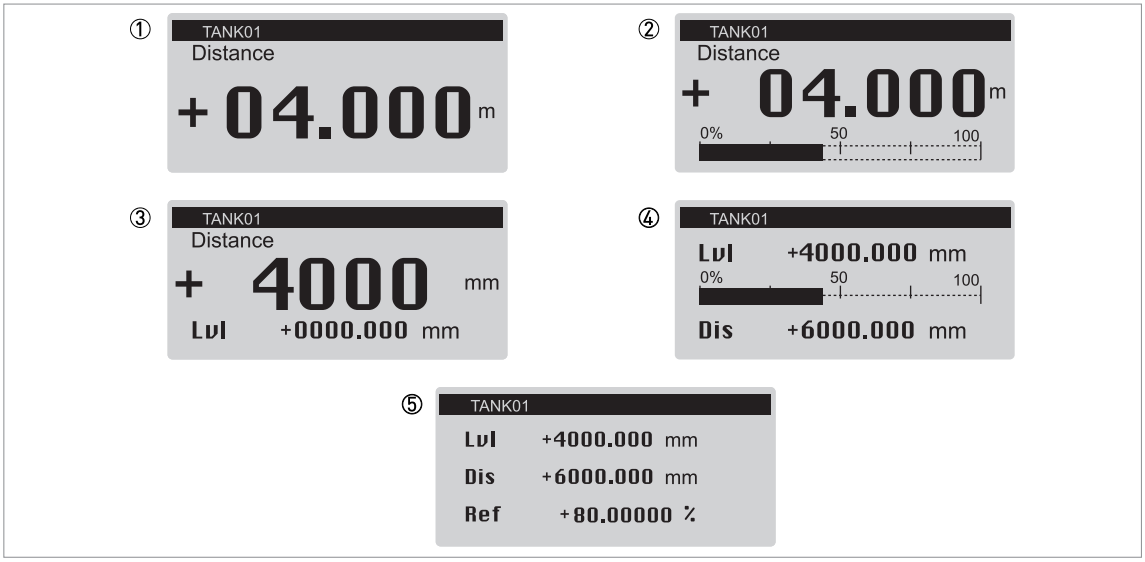

Figure 6-1: Measurement data options in Normal mode

① One value
② One value and % bar graph of the scale for the measurement value
③ Two values
④ Two values and % bar graph of the scale for the top measurement value
⑤ Three values

INFORMATION!
Current output and LCD display settings
*When you do the **Standard setup** procedure, the measurement value on the first measurement page of the LCD display (in Normal mode) automatically uses settings with the same parameters and values as the current output settings (measurement variable, 0% range and 100% range). The first measurement page shows "one value and bar" by default. If you must show one or more measurement values that are different to the transmitted output signal, change the settings in the C6.4 1st Meas. Page and C6.5 2nd Meas. Page menus. For more data, refer to Function description on page 78 – table C. Full Setup menu (C6 Display).*

Measurement data includes different measurement types (level, distance, volume, ullage volume, mass etc.). Some measurement types will only be available in Normal mode if you entered the correct parameters in Program mode. Normal mode shows abbreviations of measurement types if the measurement page is configured to show more than one measurement value. For a list of the abbreviations used in Normal mode, refer to the table that follows:

Abbreviations of measurement types used in Normal mode

Measurement type	Abbreviation
Distance	Dis
Level	Lvl
Reflection	Ref
Sensor value	SV
Volume	Vol
Ullage volume	Ull
Mass	M
Ullage mass	UllM
Linearized distance	Ldis or Distance Lin.
Linearized level	LLvl or Level Lin.

Measurement data format errors

Figure 6-2: Error symbol: the number of digits and decimal places is not sufficient for the measurement data

① Error symbol: the number of digits and decimal places is not sufficient for the measurement data. It is possible that the length units must be changed from "mm" to "m".

In this example, the device measures a distance of 10.001 m, but C7.5.1 Length is set to "mm" and C6.4.5 Format 1st Value is set to "X.XXX" (four digits with three decimal places). This is not sufficient to show a measurement value of 10.001 m. If the measurement value is equal to or more than 10 m, set C6.4.5 Format 1st Value to "Automatic".

You can change the number of digits and decimal places in the measurement values shown in Normal mode.

INFORMATION!
How to change the number of digits and decimal places in the measurement values shown in Normal mode
1st Measurement Page: *Go to menu C6.4* ***1st Measur. Page*** *and then change the number of digits and decimal places in C6.4.5* ***Format 1st value****, C6.4.7* ***Format 2nd value*** *or C6.4.9* ***Format 3rd value****.*
2nd Measurement Page: *Go to menu C6.5* ***2nd Measur. Page*** *and then change the number of digits and decimal places in C6.5.5* ***Format 1st value****, C6.5.7* ***Format 2nd value*** *or C6.5.9* ***Format 3rd value****.*

If there is a large change in a measurement value, set the related menu item to "Automatic".

Volume or mass measurement

You must make a conversion table (strapping table) to show measurement data as a volume or a mass. Go to C3.2 Input table (**Full Setup > Conversion**) to make the strapping table. For more data, refer to *How to configure the device to measure volume or mass* on page 108.

Functions of keypad buttons (Normal mode)

Keypad button	Symbol	Function
☞ ⊙ [Right]	[>]	Enter Program mode
☞ ⊙ [Return]	[↵]	—
☞ ⊙ + ⊙ [Escape]	[>]+[▲]	—
☞ ⊙ [Down]	[▼]	Change screen (measurement pages 1 and 2, and the status message page)
☞ ⊙ [Up]	[▲]	Change screen (measurement pages 1 and 2 and the status message page)

Measurement type definitions

Measurement type	Description	Available units
Level	This is a display and an output function option. It is the height from the bottom of the tank to the surface of the liquid (Tank height - Distance). If menu item C1.11 Tank Bottom Offset in Program mode is not zero, then this value will be (Tank Height + Tank Bottom Offset) - Sensor value.	m, cm, mm, in (inches), ft (feet), custom length unit
Distance	This is a display and an output function option. It is the distance from the face of the process connection (flange face or thread stop) to the surface of the liquid. If menu item C1.10 Reference Offset in Program mode is not zero, then this value will be Sensor value + Reference Offset. If menu item C1.10 Reference Offset is zero (0), then Distance = Sensor value. Refer also to "Sensor value" in this table.	m, cm, mm, in (inches), ft (feet), custom length unit
Volume	This is a display and an output function option. It gives the volume or mass of the tank contents. This data is available if you prepare a volume table in Program mode (**Full Setup > Conversion**). For data on how to prepare the conversion table, refer to *How to configure the device to measure volume or mass* on page 108.	m³, L, hL (hectolitre), in³, ft³, gal (US gallons), ImpGal (Imperial gallons), yd³, bbl (oil), bbl (beer), custom volume unit
Ullage volume	This is a display and an output function option. It gives the empty volume that can be put in the tank. This data is available if you prepare a volume table in Program mode (**Full Setup > Conversion**). For data on how to prepare the conversion table, refer to *How to configure the device to measure volume or mass* on page 108.	m³, L, hL (hectolitre), in³, ft³, gal (US gallons), ImpGal (Imperial gallons), yd³, bbl (oil), bbl (beer), custom volume unit
Mass	This is a display and an output function option. It gives the mass of the tank contents. This data is available if you prepare a volume or mass table in Program mode (**Full Setup > Conversion**). For data on how to prepare the conversion table, refer to *How to configure the device to measure volume or mass* on page 108.	kg, tn.l. (long ton), tn.sh. (short ton), lb, t (tonne), Cst. Mass (custom mass unit)
Ullage mass	This is a display and an output function option. It gives the remaining mass that can be put in the tank. This data is available if you prepare a volume or mass table in Program mode (**Full Setup > Conversion**). For data on how to prepare the conversion table, refer to *How to configure the device to measure volume or mass* on page 108.	kg, tn.l. (long ton), tn.sh. (short ton), lb, t (tonne), Cst. Mass (custom mass unit)
Reflection	This is a display and an output function option. It is the percentage of the emitted radar signal which makes a reflection on the surface of the liquid and is received by the device. If the distance measured is less than 1 metre, then the reflection value is 0%.	%
Sensor value	This is a display and an output function option. It is the distance from the face of the process connection (flange face or thread stop) to the surface of the liquid. You cannot change this value in Program mode. Refer also to "Distance" in this table.	m, cm, mm, in (inches), ft (feet), custom length unit

6.3 Program mode

6.3.1 General notes

Change the settings of your device in **Program Mode**. Data about the menus is given on page 78. You can:

- Use the **A Quick Setup** menu to change the display language, change the tag name, log in to change settings, do standard setup and empty spectrum recording procedures.
- Use the **B Test** menu to run diagnostic tests, read measurement and spectrum data.
- Use the **C Full Setup** menu to change settings. You can set up a conversion table for volume or mass measurement, change current output values, change HART® settings, change how the measurement data is shown in Normal mode, read device identification data, change critical parameters for difficult process conditions, change the password, change measurement units or reset the device to factory default settings.

CAUTION!
If you did not supply all installation data to the supplier before the delivery, the standard setup procedure in the Quick Setup menu is mandatory.

INFORMATION!
*It is not possible to enter the **D Service** menu. This menu is for factory calibration and approved personnel only.*

6.3.2 Protection of the device settings (access levels)

The settings of this device have three different access levels: "User", "Operator" and "Expert". "Expert" is the highest access level. The highest access level lets you change all available functions.

Access levels and applicable functions in Program mode

Access level	Default password	Applicable functions in Program mode (overview)
Expert	0058	• Read: Measurement data and error messages available at the "User" access level (Normal mode and menu items B2 Actual Values and C7.3.1 Message View) • Change: All sub-menus in menus A Quick Setup, B Test and C Full Setup **NOTE:** You can change the password for the "Expert" access level in menu item C7.2.2 Change Password. Refer to the INFORMATION! note that follows.
Operator	0009	• Read: Measurement data and error messages available at the "User" access level (Normal mode and menu items B2 Actual Values and C7.3.1 Message View) • Change: All HART® settings (C5) – but not C5.1.1 Current Loop Mode **NOTE:** You can change the password for the "Operator" access level in menu item C7.2.2 Change Password. Refer to the INFORMATION! note that follows.
User	—	• Read: Measurement data and error messages (Normal mode and men items B2 Actual Values and C7.3.1 Message View) • Read: All settings in menus A Quick Setup, B Test and C Full Setup • Change: All settings in menu C6 Display (language, backlight on/off, screen contrast and measurement data display options (Normal mode, pages 1 and 2)) and C7.5 Units (length, volume, mass and custom units) • Change: Access level. Go to menu item A3 Login or C7.2.1 Login to change from "User" to "Operator" or "Expert" access levels

If your access level is too low, the display will show a "lock" symbol adjacent to menu items in Program mode. If it is necessary to change a setting, move the cursor to the menu item, push [>] and enter the password used at this time for that menu item.

Figure 6-3: Lock symbol

① Lock symbol. If the display shows this symbol, you cannot change the setting.

How to change the password

- Push [>] to enter Program mode.
- Push 2 × [▼], [>], 5 × [▼], [>], [▼] and [>] to go to the menu C7.2 Security.
- Push [>] to enter menu item C7.2.1 Login.
- Enter the password used at this time for a given access level ("Operator" or "Expert"). If it is the default password, refer to the value given in the "Access levels and applicable functions in Program mode" table in this section.
- Push [↵] and [▼] to go to the menu item C7.2.2 Change Password.
- Push [>] to enter the menu item.
- Enter the password used at this time for the access level set at the start of this procedure. If it is the default password, refer to the value given in the "Access levels and applicable functions in Program mode" table in this section.
- Enter the new password.

➲ If you change the password for the "Operator" access level, then the first three digits must be zero (000x). The last digit can be a number (1...9) or a letter (A...F). If you change the password for the "Expert" access level, then the first two digits must be zero (00xx). The last two digits can be a number (1...9) or a letter (A...F).

- Enter the new password again.
- Push 6 × [↵] to go back to Normal mode.

➲ End of the procedure.

INFORMATION!
Each access level has a four-digit hexadecimal password.

The first three digits of the password for the "Operator" access level must be zero (000x). The last digit can be a number (1...9) or a letter (A...F).

The first two digits of the password for the "Expert" access level must be zero (00xx). The last two digits can be a number (1...9) or a letter (A...F).

INFORMATION!
Make a note of the password and keep it in a safe place. If you lose the password, please speak or write to your supplier.

INFORMATION!
If you de-energize the device and then energize it again, the access level will go back to "User". If you do not touch the keypad for 5 minutes, the device goes back to Normal mode and the access level will go back to "User".

6.3.3 How to get access to the Quick Setup menu

The Quick Setup menu contains the menu items that are necessary for most configurations of the device. The menu items are divided into 2 groups: "Standard Setup" and "Empty Spectrum". The "Standard Setup" group lets the user (with "Expert" access level) set the tank height, tank type (process, storage etc.), output variable, output current range, 0% range, 100% range, error function and error delay. "Empty Spectrum" is a procedure that finds interference signals in the tank and uses a filter to remove them from the measurement data.

CAUTION!
If you did not supply all installation data to the supplier before the delivery, the standard setup procedure in the Quick Setup menu is mandatory.

Do the steps that follow:

- Push [>] to enter Program mode.
- Push [>], 2 × [▼] to go to the menu item A3 Login.
- Push [>]. Enter the password used at this time for the "Expert" access level. If it is the default password, enter "0058".
- Push [↵], [▼] and [>] to go to the menu item A4.1 Standard Setup.
- Push [>]. Do the basic configuration of the device in the "Standard Setup" menu. For more data on the procedure, refer to *Standard setup* on page 98. Push [↵] at the end of each step of the procedure to continue to the next step.
- Push [▼] and [>] to go to the menu item A4.2.1 Record Spectrum.
- Push [>] to start the empty spectrum recording procedure. For more data, refer to *Empty spectrum recording* on page 101. Push [↵] at the end of each step of the procedure to continue to the next step.
- End of the procedure.

6.3.4 Keypad functions

Menu navigation

Figure 6-4: Menu navigation

① Menu number or menu item number
② Location (menu) of sub-menu or menu item
③ Menu item name

This is what you see when you are in Program mode. The functions of the buttons are given in the table that follows:

Functions of buttons for menu navigation

Button	Description	Function
☞ ⊙	Right	• Go down a menu level (for example, from menu C1 to sub-menu C1.1). • Enter the menu item.
☞ ⊙	Enter	• Go up a menu level (for example, from sub-menu C1.1 to menu C1). • Go to Normal mode. If you changed settings in Program mode, you must save or cancel your new settings. For more data, refer to *How to save settings changed in Program mode* on page 72.
☞ ⊙ + ⊙	Esc (Escape)	• Go up a menu level (for example, from sub-menu C1.1 to menu C1).
☞ ⊙	Down	• Scroll down the menu list (for example, from menu C1 to menu C2. • Scroll down the sub-menu list (for example, from sub-menu C2.1 to sub-menu C2.2).
☞ ⊙	Up	• Scroll up the menu list (for example, from menu C2 to menu C1). • Scroll up the sub-menu list (for example, from sub-menu C2.2 to sub-menu C2.1).

Lists of parameters in menu items

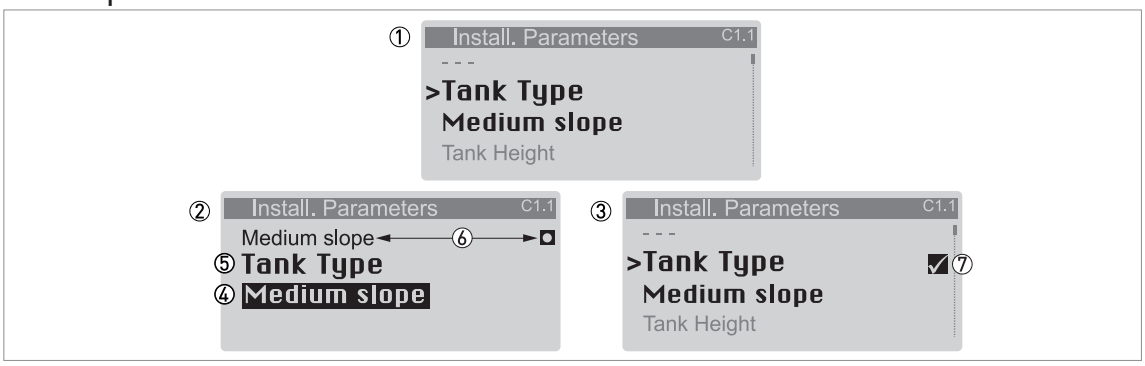

Figure 6-5: Lists of parameters in menu items

① Menu item with parameter stored at this time (first screen). Push [>] to enter the menu item.
② Push [▲] or [▼] to change the parameter
③ Push [↵] to set the new parameter and go back to the menu level
④ Parameter
⑤ Menu item name
⑥ The factory default value (left side) and factory default symbol (right side)
⑦ A "tick" symbol shows that there is a new setting (the new setting is not saved at this time)

This is what you see when you select a menu item that has a list of parameters. The functions of the buttons are given in the table that follows:

Function of buttons in menu items that have a list of parameters

Button	Description	Function
☞ (>)	Right	—
☞ (↵)	Enter	Select the parameter and go back to the menu
☞ (>) + (▲)	Esc (Escape)	If you push these buttons immediately after you change a parameter, the device also ignores this change and goes back to the menu.
☞ (▼)	Down	Scroll down the list
☞ (▲)	Up	Scroll up the list

Values in menu items

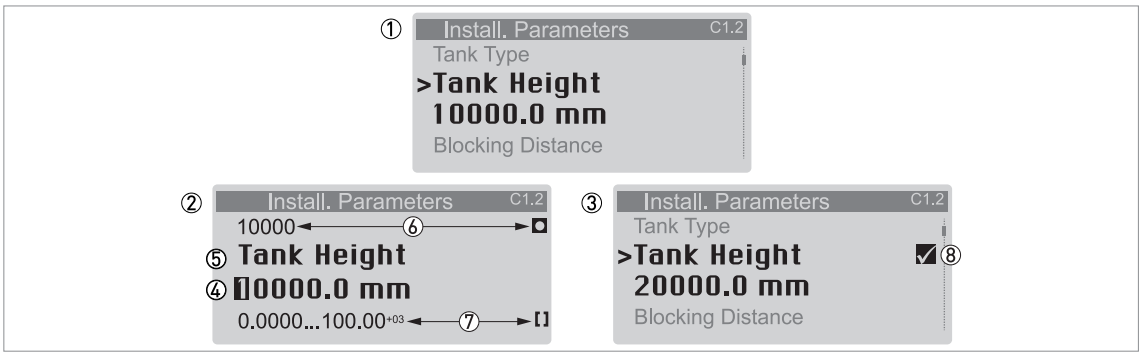

Figure 6-6: Values in menu items

① Menu item with values stored at this time (first screen). Push [>] to enter the menu item. A cursor shows on the first digit.
② Push [>] again and again to move the cursor. Push [▲] or [▼] to change the value of the digit. If the digit is part of a number, then make a selection from 0...9. If the digit is part of a custom unit name, then refer to the tables at the end of this section for a list of the available characters. If the cursor is on the decimal point, you can change the position of the decimal point.
③ Push [↵] to set the new parameter and go back to the menu level
④ Make a selection: put the cursor on a digit or the decimal point.
⑤ Menu item name
⑥ The factory default value (left side) and factory default symbol (right side)
⑦ The minimum and maximum values (min./max.) for this menu item (left side) and min./max. symbol (right side)
⑧ A "tick" symbol shows that there is a new setting (the new setting is not saved at this time)

This is what you see when you select a menu item that has a value.

INFORMATION!
If menu items have values that you can change, very large and very small values can be written as a value with an exponent (b^n). For example, if the value shown on the display is 100.00^{+03}, this value is equal to 100×10^3 or 100000.

The functions of the buttons are given in the table that follows:

Function of buttons in menu items that have values

Button	Description	Function
☞ (>)	Right	• Enter the menu item and see the value stored at this time. • Enter the menu item configuration level to change the value. • Move the cursor to the next digit on the right. If the cursor is on the last digit, push [>] again to go back to the first digit. You can also put the cursor on the decimal point.
☞ (↵)	Enter	Accept the value and go back to the sub-menu.
☞ (>) + (▲)	Esc (Escape)	If you push these buttons immediately after you change a value, the device also ignores this change and goes back to the menu.
☞ (▼)	Down	If the cursor is on a number, this button decreases the digit value. If the cursor is on the decimal point, this button moves the decimal point to the left (this decreases the value by a factor of 10).
☞ (▲)	Up	If the cursor is on a number, this button increases the digit value. If the cursor is on the decimal point, this button moves the decimal point to the right (this increases the value by a factor of 10).

INFORMATION!
Values in menu items
If the digit is part of a custom unit name, then refer to the list of available characters that follows:

Numbers

0	1	2	3	4	5	6	7	8	9

Lower case letters

a	b	c	d	e	f	g	h	i	j
k	l	m	n	o	p	q	r	s	t
u	v	w	x	y	z				

Upper case letters

A	B	C	D	E	F	G	H	I	J
K	L	M	N	O	P	Q	R	S	T
U	V	W	X	Y	Z				

Special characters

2	3	_	-	/	.	

6.3.5 How to save settings changed in Program mode

- When you have changed parameters in all the necessary menu items, push [↵] to accept the new parameter.
- Push [↵] again and again to go back to the "Save Configuration?" screen.
- The device will ask you to save or cancel your settings. Push [▲] or [▼] to make a selection from **Yes**, **No** or **Back**. **Back** makes the display go back to Program mode. If this screen is set to "Yes" or No", push [↵] to accept (Yes) or reject (No) the new settings.

➲ If you push [↵] when the screen is set to "Yes" or No", the display goes back to Normal mode.

6.3.6 Menu overview

Menu overview: A – Quick Setup

Normal	Program						
	Menu A		Submenus				
> ↵	↓↑	> ↵	↓↑	> ↵	↓↑	> ↵	
	A Quick Setup		A1 Language				
			A2Tag				
			A3 Login				
			A4 Application Assistant		**A4.1 Standard Setup**		A4.1.1.1 Length Unit
							A4.1.2.1 Tank Type
							A4.1.2.2 Tank Height
							A4.1.3.1 Current Out. 1 Var.
							A4.1.3.2 0% Range
							A4.1.3.3 100% Range
							A4.1.3.4 Current Out. Range
							A4.1.3.5 Error Function
					A4.2 Empty Spectrum / A4.2.1 Record Spectrum		A4.2.1.2 Empty Spectrum Type
							A4.2.1.3 Partial Distance ①
							A4.2.1.4 Check Tank Internals and Contents
							A4.2.1.5 Start Recording?
							A4.2.1.6 Recording Empty Spectrum Data
							A4.2.1.10 Empty Spectrum Graph
							A4.2.1.11 Save Spectrum?
							A4.2.1.12 Empty Spectrum Enable

① The device shows this menu item if you set the menu item A4.2.1.1 to "Partial, Average" or "Partial, Max"

Menu overview: B – Test

Normal	Program						
	Menu B		Submenus				
> ↵	↓↑	> ↵	↓↑	> ↵	↓↑	> ↵	↓↑ >
	B Test		**B1 Simulation** ①		**B1.1 Set Value**		B1.1.2 Level
							B1.1.3 Distance
							B1.1.4 Reflection
							B1.1.5 Level Lin. ②
							B1.1.6 Volume ②
							B1.1.7 Mass ②
							B1.1.8 Distance Lin. ②
							B1.1.9 Ullage Volume ②
							B1.1.10 Ullage Mass ②
					B1.2 Output		B1.2.1 Current Output 1
			B2 Actual Values		B2.1 Operating Time		
					B2.3 Sensor Value		
					B2.4 Level		
					B2.5 Distance		
					B2.6 Reflection		
					B2.7 Level Lin. ②		
					B2.8 Volume ②		
					B2.9 Mass ②		
					B2.10 Distance Lin. ②		
					B2.11 Ullage Volume ②		
					B2.12 Ullage Mass ②		
					B2.13 Sensor Temp.		
					B2.14 Converter Temp.		
			B3 Power Spectrum		B3.2 Power Spectrum		
			B4 Corrected Spectrum		B4.2 Corrected Spectrum		
			B5 Empty Spectrum		B5.2 Empty Spectrum		

① You must enter the "Expert" password in A3 Login or C7.2.1 Login to find and use this menu
② The device shows this menu item if you make a strapping table in menu C.3 Conversion

Menu overview: C – Full Setup

Normal	Program						
	Menu C		Submenus				
> ↵	↓↑	> ↵	↓↑	> ↵	↓↑	> ↵	↓↑ >
			C1 Install Parameters		C1.1 Tank Type		
					C1.2 Tank Height		
					C1.5 Blocking Distance		
					C1.6 Time Constant		
					C1.7 Antenna Type		
					C1.8 Antenna Extension		
					C1.9 Distance Piece		
					C1.10 Reference Offset		
					C1.11 Tank Bottom Offset		
			C2 Process		C2.1 Tracking Velocity		
					C2.2 Epsilon R Product		
					C2.3 Epsilon R Gas		
					C2.4 Measuring Mode		
					C2.5 Overfill Detection		
					C2.6 Overfill Threshold		
					C2.7 Mult. Refl. Enable		
					C2.8 Empty Spectrum Enable		
			C3 Conversion ①		**C3.1 Edit Table**		C3.1.1 Erase Table? ②
							C3.1.3 Select Conversion? ③
					C3.2 Input Table		C3.2.2 Point
							C3.2.4 Level
							C3.2.5 Conv. Value
			C4 Output		**C4.1 Current Output 1**		C4.1.1 Current Out. 1 Var.
							C4.1.2 0% Range
							C4.1.3 100% Range
							C4.1.4 Current Out. Range
							C4.1.5 Error Function
							C4.1.7 Low Error Current ④
							C4.1.8 High Error Current ④
							C4.1.9.2 Trimming / 4mA Trimming
							C4.1.9.5 Trimming / 20mA Trimming

Normal	Program						
	Menu C		Submenus				
> ↵	↓↑	> ↵	↓↑	> ↵	↓↑	> ↵	↓↑ >
			C5 Communication		**C5.1. HART**		C5.1.1 Current Loop Mode
							C5.1.2.1 Identification / Polling Address
							C5.1.2.2 Identification / Tag
							C5.1.2.3 Identification / Long Tag
							C5.1.2.4 Identification / Manufacturer ID
							C5.1.2.5 Identification / Device Type
							C5.1.2.6 Identification / Device ID
							C5.1.2.7 Identification / Universal Revision
							C5.1.2.8 Identification / Device Revision
							C5.1.2.9 Identification / Software Revision
							C5.1.2.10 Identification / Hardware Revision
							C5.1.3.1 Device Information / Descriptor
							C5.1.3.2 Device Information / Message
							C5.1.3.3 Device Information / Date
							C5.1.3.4 Device Information / Cfg. Change Counter
							C5.1.4.1 HART Variables / Current Out. 1 Var.
							C5.1.4.2 HART Variables / HART sec./CO2 Var.
							C5.1.4.3 HART Variables / Tertiary Var.
							C5.1.4.4 HART Variables / Quaternary Var.
			C6 Display		C6.1 Language		
					C6.2 Backlight		
					C6.3 Contrast		

Normal	Program						
	Menu C		Submenus				
> ↵	↓↑	> ↵	↓↑	> ↵	↓↑	> ↵	↓↑ >
			C6 Display		**C6.4 1st Meas. page**		C6.4.1 Function
							C6.4.2 1st Value Variable
							C6.4.3 0% Range
							C6.4.4 100% Range
							C6.4.5 Format 1st Value
							C6.4.6 2nd Value Variable ⑤
							C6.4.7 Format 2nd Value ⑤
							C6.4.8 3rd Value Variable ⑤
							C6.4.9 Format 3rd Value ⑤
					C6.5 2nd Meas. page		C6.5.1 Function
							C6.5.2 1st Value Variable
							C6.5.3 0% Range
							C6.5.4 100% Range
							C6.5.5 Format 1st Value
							C6.5.6 2nd Value Variable ⑥
							C6.5.7 Format 2nd Value ⑥
							C6.5.8 3rd Value Variable ⑥
							C6.5.9 Format 3rd Value ⑥
			C7 Device		**C7.1 Information**		C7.1.1 Tag
							C7.1.2 Serial Number
							C7.1.3 Device Name
							C7.1.4 V Number
							C7.1.5 Electronic Revision
							C7.1.6 Software Version
							C7.1.7 Electronic Serial No.
							C7.1.8 Production Date
							C7.1.9 Calibration Date
					C7.2 Security		C7.2.1 Login
							C7.2.2 Change Password
							C7.2.3 Reset Passwords
							C7.2.4 Unlock Extended Range ⑦
							C7.2.5 Unlock SIL ⑦
					C7.3 Errors		C7.3.1 Message View
							C7.3.2.1 Error-Mapping / Sensor: Information

Normal	Program						
	Menu C		Submenus				
> ↵	↓↑	> ↵	↓↑	> ↵	↓↑	> ↵	↓↑ >
					C7.5 Units		C7.5.1 Length
							C7.5.2.1 Cst. Length / Text
							C7.5.2.2 Cst. Length / Offset
							C7.5.2.3 Cst. Length / Factor
							C7.5.3 Volume
							C7.5.4.1 Cst. Volume / Text
							C7.5.4.2 Cst. Volume / Offset
							C7.5.4.1 Cst. Volume / Factor
							C7.5.5 Mass
							C7.5.6.1 Cst. Mass / Text
							C7.5.6.2 Cst. Mass / Offset
							C7.5.6.3 Cst. Mass / Factor
					C7.6 Factory Default		C7.6.1 Reset to Fact. Def.? ①

① You must enter the "Expert" password in A3 Login or C7.2.1 Login to find and use this menu
② This menu item is available if the device has a strapping table
③ This menu item is available if the device does not have a strapping table
④ Menu item C4.1.7 is available if you set menu item C4.15 to "Low". Menu item C4.1.8 is available if you set menu item C4.15 to "High".
⑤ This menu item is available if the correct parameter is set in C6.4.1 Function. For more data, refer to table C. Full Setup menu (C6.4 1st Meas. Page) in the section that follows.
⑥ This menu item is available if the correct parameter is set in C6.5.1 Function. For more data, refer to table C. Full Setup menu (C6.5 2nd Meas. Page) in the section that follows.
⑦ This menu item can only be unlocked at the factory

6.3.7 Function description

A – Quick Setup menu

Menu No.	Function	Function description	Selection list	Default
A1	Language	Make a selection to show the measurement data and settings in one of the languages stored in the device. **Minimum access level to change the setting:** User	English, French, German, Italian, Japanese, Chinese (simplified), Portuguese, Russian, Spanish, Czech, Polish, Turkish	English
A2	Tag	You can see the TAG name here. The tag name can be a maximum of 8 characters long and it can have numbers, upper-case and lower-case letters and special characters. For more data, refer to *Keypad functions* on page 69 (values in menu items). **Minimum access level to change the setting:** Operator	Refer to "Function description"	TANK01

Menu No.	Function	Function description	Selection list	Default
A3	Login	Enter the appropriate password here to change settings. If you do not enter the password, you can only change settings for the "user" access level. For more data, refer to *Protection of the device settings (access levels)* on page 66.	4-digit hexadecimal password	Refer to "Function description"
A4 Application Assistant				
A4.1	Standard Setup	This starts a quick set-up procedure applicable to most applications. You can set the length unit, installation specifications (tank type, tank height etc.) and current output specifications (0% range, 100% range, error function etc.). For more data about the functions, refer to Table C – Full Setup, in this section. For more data about the procedure, refer to *Standard setup* on page 98. **Minimum access level to do the procedure:** Expert		
A4.2	Empty Spectrum	Fixed and moving objects in the tank cause interference signals. Put them through this filter to correctly measure the tank contents. This menu item starts a quick set-up procedure. We recommend that the tank is empty or only filled to the minimum level before you do the procedure. We also recommend that if you installed the device on a tank that has equipment with parts that move (e.g. agitators), start the equipment. Set the **Save Spectrum?** step to "Yes", **Empty Spectrum Enable** step to "Enable" at the end the procedure and set the Save Configuration? screen to "Yes" to use the data. For more data about the procedure, refer to *Empty spectrum recording* on page 101. Refer also to "How to make a filter to remove radar signal interference" on page 111. **Minimum access level to do the procedure:** Expert		

B – Test menu

Menu No.	Function	Function description	Selection list	Default

B1 Simulation

B1.1 Set Value				
B1.1.2	Level	This sets the device to a given test level value. Make sure that menu item C4.1.1 Current Out. 1 Var. is set to "Level" before the device simulates a level value. This procedure sends an output signal that agrees with the test reading. Output will change to the selected value, independent of the measurement data. When you push [↵] to confirm the value, the display shows the question "Start Simulation?" Push [▼] or [▲] to set the display to "Yes". Push [↵] again to start the test. The device goes to back to Normal mode after 1 hour. **Minimum access level to do the procedure:** Expert	min-max: -4900.0...+5100.0 m / -192.91^{+03}...$+200.79^{+03}$ in / -16076...+16732 ft	①
B1.1.3	Distance	This sets the device to a given test distance value. Make sure that menu item C4.1.1 Current Out. 1 Var. is set to "Distance" before the device simulates a distance value. This procedure sends an output signal that agrees with the test reading. Output will change to the selected value, independent of the measurement data. When you push [↵] to confirm the value, the display shows the question "Start Simulation?" Push [▼] or [▲] to set the display to "Yes". Push [↵] again to start the test. The device goes to back to Normal mode after 1 hour. **Minimum access level to do the procedure:** Expert	min-max: -4900.0...+5100.0 m / -192.91^{+03}...$+200.79^{+03}$ in / -16076...+16732 ft	①
B1.1.4	Reflection	This sets the device to a given test reflection value. Make sure that menu item C4.1.1 Current Out. 1 Var. is set to "Reflection" before the device simulates a level value. This procedure sends an output signal that agrees with the test reading. Output will change to the selected value, independent of the measurement data. When you push [↵] to confirm the value, the display shows the question "Start Simulation?" Push [▼] or [▲] to set the display to "Yes". Push [↵] again to start the test. The device goes to back to Normal mode after 1 hour. **Minimum access level to do the procedure:** Expert	min-max: 0...100%	①

Menu No.	Function	Function description	Selection list	Default
B1.1.5	Level Lin.	This sets the device to a given test level value (linearized). This menu item is only available if you set up a linearization table in menu item **C3.1 Edit Table**. Make sure that menu item C4.1.1 Current Out. 1 Var. is set to "Lin. Level" before the device simulates a level value. This procedure sends an output signal that agrees with the test reading. Output will change to the selected value, independent of the measurement data. When you push [↵] to confirm the value, the display shows the question "Start Simulation?" Push [▼] or [▲] to set the display to "Yes". Push [↵] again to start the test. The device goes to back to Normal mode after 1 hour. **Minimum access level to do the procedure:** Expert	min-max: -5000.0...+5000.0 m / -196.85^{+03}...$+196.85^{+03}$ in / -16404...+16404 ft	①
B1.1.6	Volume	This sets the device to a given test volume value. This menu item is only available if you set up a conversion (volume) table in menu item **C3.1 Edit Table**. Make sure that menu item C4.1.1 Current Out. 1 Var. is set to "Volume" before the device simulates a volume value. This procedure sends an output signal that agrees with the test reading. Output will change to the selected value, independent of the measurement data. When you push [↵] to confirm the value, the display shows the question "Start Simulation?" Push [▼] or [▲] to set the display to "Yes". Push [↵] again to start the test. The device goes to back to Normal mode after 1 hour. **Minimum access level to do the procedure:** Expert	min-max: $0...1.00^{+06}$ m³	①
B1.1.7	Mass	This sets the device to a given test mass value. This menu item is only available if you set up a conversion (mass) table in menu item **C3.1 Edit Table**. Make sure that menu item C4.1.1 Current Out. 1 Var. is set to "Mass" before the device simulates a mass value. This procedure sends an output signal that agrees with the test reading. Output will change to the selected value, independent of the measurement data. When you push [↵] to confirm the value, the display shows the question "Start Simulation?" Push [▼] or [▲] to set the display to "Yes". Push [↵] again to start the test. The device goes to back to Normal mode after 1 hour. **Minimum access level to do the procedure:** Expert	min-max: $0...10.000^{+09}$ kg	①

Menu No.	Function	Function description	Selection list	Default
B1.1.8	Distance Lin.	This sets the device to a given test distance value (linearized). This menu item is only available if you set up a linearization table in menu item **C3.1 Edit Table**. Make sure that menu item C4.1.1 Current Out. 1 Var. is set to "Lin. Distance" before the device simulates a linearized distance value. This procedure sends an output signal that agrees with the test reading. Output will change to the selected value, independent of the measurement data. When you push [↵] to confirm the value, the display shows the question "Start Simulation?" Push [▼] or [▲] to set the display to "Yes". Push [↵] again to start the test. The device goes to back to Normal mode after 1 hour. **Minimum access level to do the procedure:** Expert	min-max: -5000.0...+5000.0 m / -196.85^{+03}...$+196.85^{+03}$ in / -16404...+16404 ft	①
B1.1.9	Ullage Volume	This sets the device to a given test ullage volume value. This menu item is only available if you set up a conversion (volume) table in menu item **C3.1 Edit Table**. Make sure that menu item C4.1.1 Current Out. 1 Var. is set to "Ullage Volume" before the device simulates an ullage volume value. This procedure sends an output signal that agrees with the test reading. Output will change to the selected value, independent of the measurement data. When you push [↵], the display shows the question "Start Simulation?" Push [▼] or [▲] to set the display to "Yes". Push [↵] again to start the test. The device goes to back to Normal mode after 1 hour. **Minimum access level to do the procedure:** Expert	min-max: $0...1.00^{+06}$ m³	①
B1.1.10	Ullage Mass	This sets the device to a given test ullage mass value. This menu item is only available if you set up a conversion (mass) table in menu item **C3.1 Edit Table**. Make sure that menu item C4.1.1 Current Out. 1 Var. is set to "Ullage Mass" before the device simulates a mass value. This procedure sends an output signal that agrees with the test reading. Output will change to the selected value, independent of the measurement data. When you push [↵] to confirm the value, the display shows the question "Start Simulation?" Push [▼] or [▲] to set the display to "Yes". Push [↵] again to start the test. The device goes to back to Normal mode after 1 hour. **Minimum access level to do the procedure:** Expert	min-max: $0...10.000^{+09}$ kg	①

Menu No.	Function	Function description	Selection list	Default
B1.2 Output				
B1.2.1	Current Output 1	This sets analogue output 1 to a test value [mA]. Output will change to the selected value, independent of the measured value. When you push [↵] to confirm the value, the display shows the question "Start Simulation?" Push [▼] or [▲] to set the display to "Yes". Push [↵] again to start the test. The device goes to back to Normal mode after 1 hour. **Minimum access level to do the procedure:** Expert	3.6...21.5 mA	①

B2 Actual Values

B2.1	Operating Time [s]	This is the total time that the device is energized in seconds.	Read only	—
B2.4	Level	This menu item shows the level readings measured at this time. This measurement data is shown with the units set in menu **C7.5 Units**.	Read only	—
B2.5	Distance	This menu item shows the distance readings measured at this time. This measurement data is shown with the units set in menu **C7.5 Units**.	Read only	—
B2.6	Reflection	This menu item shows the percentage of the emitted radar signal which makes a reflection on the surface of the silo contents and is received by the device. If the distance measured is less than 1 metre, then the reflection value is 0%.	Read only	—
B2.7	Level Lin.	This menu item shows the level readings (linearized) measured at this time. This measurement data is shown with the units set in menu **C7.5 Units**. This menu item is only available if you set up a linearization table in menu item **C3.1 Edit Table**.	Read only	—
B2.8	Volume	This menu item shows the volume readings measured at this time. This measurement data is shown with the units set in menu **C7.5 Units**. This menu item is only available if you set up a conversion (volume) table in menu item **C3.1 Edit Table**.	Read only	—
B2.9	Mass	This menu item shows the mass readings measured at this time. This measurement data is shown with the units set in menu **C7.5 Units**. This menu item is only available if you set up a conversion (mass) table in menu item **C3.1 Edit Table**.	Read only	—
B2.10	Distance Lin.	This menu item shows the distance readings (linearized) measured at this time. This measurement data is shown with the units set in menu **C7.5 Units**. This menu item is only available if you set up a linearization table in menu item **C3.1 Edit Table**.	Read only	—

Menu No.	Function	Function description	Selection list	Default
B2.11	Ullage Volume	This menu item shows the ullage volume readings measured at this time. This measurement data is shown with the units set in menu **C7.5 Units**. This menu item is only available if you set up a conversion (volume) table in menu item **C3.1 Edit Table**.	Read only	—
B2.12	Ullage Mass	This menu item shows the ullage mass readings measured at this time. This measurement data is shown with the units set in menu **C7.5 Units**. This menu item is only available if you set up a conversion (mass) table in menu item **C3.1 Edit Table**.	Read only	—
B2.13	Sensor Temp.	Temperature of the sensor electronics block.	Read only	—
B2.14	Converter Temp.	Temperature of the converter electronics block. Operation of display can stop if the temperature is below -20°C / -4°F or above +70°C / +158°F.	Read only	—

B3 Power Spectrum

B3.2	Power Spectrum	This menu item shows the raw spectra data of the radar signal which makes a reflection on the surface of the silo contents and is received by the device. This data is shown as a graph of the percentage of the full-scale signal against distance.	Read only	—
B4 Corrected Spectrum				
B4.2	Corrected Spectrum	This menu item shows the corrected spectra data of the radar signal which makes a reflection on the surface of the silo contents and is received by the device. This is the result of the spectra data from an empty silo subtracted from the power spectra data. This data is shown as a graph of the percentage of the full-scale signal against distance.	Read only	—
B5 Empty Spectrum				
B5.2	Empty Spectrum	This menu item shows the spectra of the radar signal which makes a reflection on objects inside an empty tank (interference signals). This data is shown as a graph of the percentage of the full-scale signal against distance. It is also possible to do an empty spectrum scan in a partially full tank, if it is not possible to remove all the tank contents.	Read only	—

① The default value is the measured value at the time that you start the simulation

C – Full Setup menu

Menu No.	Function	Function description	Selection list	Default

C1 Install. Parameters

C1.1	Tank Type	The conditions in which the device is used. If the surface of the product is flat, select "Flat surface". If there is a slightly uneven surface, select "Medium slope". If the surface has a steep slope, select "Steep slope". **Minimum access level to change the setting:** Expert	Flat Surface, Medium Slope, Steep Slope	Steep Slope ①
C1.2	Tank Height	Tank height is the distance from the flange face/thread stop of the process connection to the tank bottom. If you use the device for an LPR (open-air) application, this value is the maximum distance that the device must measure (the measuring range). **Minimum access level to change the setting:** Operator	min-max: 0.0...100.00^{+03} mm / 0.0...2362.2¨ / 0.0...196.85 ft	20000 mm / 787.402¨ / 65.617 ft ①
C1.5	Blocking Distance	The distance from the flange facing or the thread stop to the top limit of the measuring range (a zone given by the user where it is not possible to measure). We recommend a minimum blocking distance of 300 mm / 12¨ below the bottom of the antenna. If the distance is less than the blocking distance, the device continues to show the blocking distance on the display screen. **Minimum access level to change the setting:** Expert	min-max: 0.0...5000.0 mm / 0.0...196.85¨ / 0.0...16.404 ft	Antenna length + antenna extension length + 300 mm / 12¨
C1.6	Time Constant	Using this function, the device processes several measurement readings to filter out disturbances. Increasing the time constant will smoothen the integrated readings, decreasing will roughen the readings. s = seconds. **Minimum access level to change the setting:** Expert	min-max: 0....100.0 sec (seconds)	30 s
C1.7	Antenna Type	The type of antenna attached to the device. If you change the antenna, this setting will have an effect on C1.2 Tank Height and C1.5 Blocking Distance. **Minimum access level to change the setting:** Expert	Metallic Horn (DN80), Metallic Horn (DN100), Metallic Horn (DN200), Drop (PP, DN80), Drop (PP, DN100), Drop (PP, DN150); Drop (PTFE, DN80), Drop (PTFE, DN100), Drop (PTFE, DN150)	As specified in the customer order
C1.8	Antenna Extension	Optional antenna extension. These are attached between the flange and the antenna. Each segment is 105 mm / 4.1¨ long. **Minimum access level to change the setting:** Expert	min-max: 0.0…1050 mm / 0.0...41.339¨ / 0.0...3.4449 ft	0 mm /0¨ ①

Menu No.	Function	Function description	Selection list	Default
C1.9	Distance piece	Optional distance piece between the converter and the process connection. This is for the high-temperature version of the device. Each segment is 105 mm / 4.1" long. **Minimum access level to change the setting:** Expert	min-max: 0.0…2000 mm / 0.0...78.740" / 0.0...6.5617 ft	0 mm / 0" ①
C1.10	Reference Offset	Offset relating to a reference location (distance). This value is positive when the reference location is above the device flange face and negative if below. For more data, refer to *Distance measurement* on page 104. **Minimum access level to change the setting:** Expert	min-max: -5000.0+0…+5000.0 m / -196.85^{+03}...$+196.85^{+03}$" / -16404...+16404 ft	0 m / 0 ft
C1.11	Tank Bottom Offset	Offset relating to a reference location (level). The device reference point for this parameter is the bottom of the tank (set in menu item C1.2 Tank Height). This value is positive when the reference location is below the tank bottom and negative if above. For more data, refer to *Level measurement* on page 106. **Minimum access level to change the setting:** Expert	min-max: -5000.0+0…+5000.0 m / -196.85^{+03}...$+196.85^{+03}$" / -16404...+16404 ft	0 m / 0 ft

C2 Process

C2.1	Tracking Velocity	This menu item sets the maximum rate of change of level in metres per minute or feet per minute. The measured value cannot change faster than the tracking velocity. **Minimum access level to change the setting:** Expert	min-max: 1.2^{-03}…60.0 m/min / 3.94^{-03}...196.85 ft/min	500^{-03} m/min / 1.64042 ft/min
C2.2	Epsilon R Product	The device automatically calculates the level based on the product ε_r. If you select "TBF Full" or "TBF Auto" in menu item C2.4 Measuring Mode, you can change this value manually to adjust readings. **Minimum access level to change the setting:** Expert	1.1...20	2.0
C2.3	Epsilon R Gas	A major parameter for radar level measurement devices. This can be applicable to high pressure applications or tanks that contain a specified gas. If the gas is not 1.0, set the $\varepsilon_r$value to the ε_r value of the gas. **Minimum access level to change the setting:** Expert	1.0...20	1.0

Menu No.	Function	Function description	Selection list	Default
C2.4	Measuring Mode	This menu item is set by default to "Direct Measuring" to measure the level of most tank contents. The device uses the largest radar signal to monitor level. If it is possible there will be an interference signal in the measurement zone that is larger than the level signal, select "Direct Plus" mode. If you select "Direct Plus" mode, the device locks on the level signal and monitors changes in level. If the device then finds larger reflections in the silo, it will only monitor the largest signal in a small search zone around the first reflection found and ignore all other reflections. The interference signal must not be near to the level signal. Refer also to "Measuring principle" on page 127. **Minimum access level to change the setting:** Expert	Direct, Direct Plus	Direct
C2.5	Overfill Detection	If this function is in operation, the device will monitor the level even if it is in the blocking distance. The output shown on the display screen stays fixed at the blocking distance, but an error message will warn the user that the tank is too full. **Minimum access level to change the setting:** Expert	Disabled, Enabled	Disabled ①
C2.6	Overfill Threshold	If you have set menu item C2.5 Overfill Detection to "Enabled", this menu item will be available. If the device cannot easily measure in the blocking distance (see menu item C1.5), then you can change the overfill threshold. This value is a percentage of the radar signal amplitude. To enter the correct value, we recommend that you speak or write to your supplier. **Minimum access level to change the setting:** Expert	min-max: 0.0...100.0%	10%
C2.7	Mult. Refl. Enable	Multiple reflections will cause the device to display smaller level readings. Installation of the device on a manhole or at the centre of a dome roof, and high dielectric products (εr >5) can cause multiple reflections. A very calm surface or a tank with a small convex or flat roof can also cause multiple reflections. If this function is in operation, the device looks for the first signal peak below the process connection. This signal peak is then used to measure the level of the tank contents. If this function is not in operation, the device looks for the largest signal below the process connection. **Minimum access level to change the setting:** Expert	Disabled, Enabled	Disabled ①

Menu No.	Function	Function description	Selection list	Default
C2.8	Empty Spectrum Enable	This function starts and stops the interference signal filter. Interference signals are the result of fixed and moving obstacles inside the tank. If you must do a spectrum analysis, record an empty spectrum first. Do the "Empty Spectrum" procedure (menu A4.2) in the Quick Setup menu. **Minimum access level to change the setting:** Expert	Disabled, Enabled	Disabled

C3 Conversion

C3.1 Edit Table				
C3.1.1	Erase Table?	Before you can make a conversion table, you must delete the data that is stored in the device at this time. If you set this menu item to "No" you will go back to menu C3.1. If you set it to "Yes", you will go to menu item C3.1.3 Select Conversion. **Minimum access level to change the setting:** Expert	Yes, No	No
C3.1.3	Select Conversion	If you must make a volume conversion table, set this menu item to "Volume". If you must make a mass conversion table, set this menu item to "Mass". If you must make a linearization table to make sure that the readings always agree with reference measurements, set this menu item to "Linearization". **Minimum access level to change the setting:** Expert	Volume, Mass, Linearization	Volume
C3.2 Input Table				
C3.2.2	Point	This adds a point on the conversion table. Each time you enter this menu item, this number will automatically increment by 1 point. If it is necessary to change the data for a point, change the point number. When you push [↵], you go to menu item C3.2.4 Level. **Minimum access level to do the procedure:** Expert	min-max: 001...050	001
C3.2.4	Level	Enter the level value for the point given in C3.2.2. Push [↵] to confirm the level value and go to C3.2.5 Conv. Value. **Minimum access level to do the procedure:** Expert	min-max: $0.0...100.0^{+03}$ mm / 0.0...3937.0¨	0.0 mm / 0.0¨
C3.2.5	Conv. Value	Enter the conversion value (volume, mass or linearization) for the point given in C3.2.2. Push [↵] to confirm the conversion value and go back to menu C3.2. **Minimum access level to do the procedure:** Expert	min-max: Volume: $0.0...100.0^{+09}$ m³ / $0.0...26.417^{+12}$ gal Mass: $0.0...100.0^{+09}$ kg / $0.0...220.46^{+09}$ lb Linearization: $0.0...100.0^{+12}$ mm / $0.0...3.937^{+12}$¨	Volume: 0.0 m³ / 0.0 gal Mass: 0.0 kg / 0.0 lb Linearization: 0.0 mm / 0.0¨

Menu No.	Function	Function description	Selection list	Default

C4 Output

C4.1 Current Output 1				
C4.1.1	Current Out. 1 Var.	Make a selection from the available output functions to scale the current output values. This is not shown in the Normal mode. **Minimum access level to change the setting:** Expert	Level, Distance, Sensor Value, Reflection ②	Level ①
C4.1.2	0% Range	Give a measurement value to 0% output (refer also to menu item **C4.1.1 Current Out. 1 Var** for the output function). 0% output = 4 mA. It is possible to have an output less than 4 mA (<0%) if you set C4.1.4 Current Out. Range to "3.8-20.5 mA". **Minimum access level to change the setting:** Expert	min-max: -4.9^{+06}...$+5.1^{+06}$ mm / -192.91^{+03}...$+200.79^{+03}$/ -16076...+16732 ft	0.0 mm ①
C4.1.3	100% Range	Give a measurement value to 100% output (refer also to menu item **C4.1.1 Current Out. 1 Var** for the output function). 100% output = 20 mA. It is possible to have an output more than 20 mA (>100%) if you set C4.1.4 Current Out. Range to "3.8-20.5 mA". **Minimum access level to change the setting:** Expert	min-max: -4.9^{+06}...$+5.1^{+06}$ mm / -192.91^{+03}...$+200.79^{+03}$/ -16076...+16732 ft	C1.2 Tank Height - C1.5 Blocking Distance ①
C4.1.4	Current Out. Range	This menu item sets the limits of the output current range to 1 of 4 available options: standard limits (4...20 mA), NAMUR NE 43-compliant limits (3.8...20.5 mA), reversed standard limits and reversed NAMUR NE 43-compliant limits. You use standard limits when you want the 0% output to be 4 mA and the 100% output to be 20 mA. You use reversed limits when you want the 0% output to be to be 20 mA and 100% output to be 4 mA. **Minimum access level to change the setting:** Expert	4-20 mA, 3.8-20.5 mA (NAMUR), 4-20 mA (reversed), 3.8-20.5 mA (reversed)	4-20 mA ①

Menu No.	Function	Function description	Selection list	Default
C4.1.5	Error Function	This sets the behaviour of current output 1 if an error occurs. If this menu item is set to "Off", no signal is given (this parameter is not available if menu item C4.1.4 is set to "3.8-20.5 mA" (NAMUR) or "3.8-20.5 mA (reversed)"). If this menu item is set to "Hold", the output current stays at the value where the error occurred (this parameter is not available if menu item C4.1.4 is set to "3.8-20.5 mA" (NAMUR) or "3.8-20.5 mA (reversed)"). If this menu item is set to "Low", the output current changes to 3.5 mA (default value) if an error occurs. If this menu item is set to "High", the output current changes to 21.5 mA (default value) if an error occurs. You can change the low error current value in menu item C4.1.7. You can change the high error current value in menu item C4.1.8. **Minimum access level to change the setting:** Expert	Off, Low, High, Hold	Hold ①
C4.1.7	Low Error Current	This menu item is available if C4.1.5 Error Function is set to "Low". You can change the value to which the current output will change if an error occurs. **Minimum access level to change the setting:** Expert	min-max: 3.5...3.6 mA	3.5 mA
C4.1.8	High Error Current	This menu item is available if C4.1.5 Error Function is set to "High". You can change the value to which the current output will change if an error occurs. **Minimum access level to change the setting:** Expert	min-max: 21.0...21.5 mA	21.5 mA
C4.1.9 Trimming				
C4.1.9.2	4mA Trimming	Use this menu item if the current output of the device is set to 4 mA, but the measured loop current is not 4 mA. Enter the measured value. **Minimum access level to change the setting:** Expert	min-max: 0.0...25.0 mA	4 mA
C4.1.9.5	20mA Trimming	Use this menu item if the current output of the device is set to 20 mA, but the measured loop current is not 20 mA. Enter the measured value. **Minimum access level to change the setting:** Expert	min-max: 0.0...25.0 mA	20 mA

C5 Communication

C5.1 HART				
C5.1.1	Current Loop Mode	Set this menu item to "On" if the "Primary Variable" for current output 1 must also be transmitted as a 4…20 mA signal. If this menu item is set to "Off', this stops the 4…20 mA signal and starts HART® multi-drop mode. **Minimum access level to change the setting:** Expert	On, Off	On

Menu No.	Function	Function description	Selection list	Default
C5.1.2 Identification				
C5.1.2.1	Polling Address	A polling address more than 0 will start HART® multi-drop mode. If you start HART® multi-drop mode, the current output stays constant at 4 mA. **Minimum access level to change the setting:** Operator	000...063	0
C5.1.2.2	Tag	Use this menu item to change the Tag name. It can have a maximum of 8 characters. For more data about the characters available, refer to *Keypad functions* on page 69 (values in menu items). **Minimum access level to change the setting:** Operator	—	TANK01
C5.1.2.3	Long Tag	Use this menu item to change the long Tag name. It can have a maximum of 32 characters. For more data about the characters available, refer to *Keypad functions* on page 69 (values in menu items). **Minimum access level to change the setting:** Operator	—	—
C5.1.2.4	Manufacturer ID	This is the manufacturer ID number given to the supplier by the HART Foundation.	Read only	—
C5.1.2.5	Device Type	This is the device type number given to the supplier by the HART Foundation.	Read only	—
C5.1.2.6	Device ID	This is the device ID number given to the supplier by the HART Foundation. This shows that the HART Foundation registered the HART® device description (DD) file.	Read only	—
C5.1.2.7	Universal Revision	This is the version of the HART protocol used by the device.	Read only	—
C5.1.2.8	Device Revision	This is the revision number for the HART® device description.	Read only	—
C5.1.2.9	Software Revision	This is the revision number for the device software.	Read only	—
C5.1.2.10	Hardware Revision	This is the revision number for the device hardware.	Read only	—
C5.1.3 Device Information				
C5.1.3.1	Descriptor	You can give a short description (16 characters maximum) of the device in this menu item. **Minimum access level to change the setting:** Operator	—	—
C5.1.3.2	Message	You can give more data in this menu item (32 characters maximum). **Minimum access level to change the setting:** Operator	—	—
C5.1.3.3	Date	You can enter the date in this menu item (Format: Year-Month-Day / YYYY-MM-DD) **Minimum access level to change the setting:** Operator	—	2014-01-01

Menu No.	Function	Function description	Selection list	Default
C5.1.3.4	Cfg. Change Counter	This function counts the number of changes to the HART® device settings	Read only	—
C5.1.4 HART Variables				
C5.1.4.1	Current Out. 1 Var.	This is the first measurement type shown on HART® controllers. Make a selection from the list. **Minimum access level to change the setting:** Expert	Level, Distance, Sensor Value, Reflection ②	Level
C5.1.4.2	HART/sec./CO2 Var.	This is the second measurement type shown on HART® controllers. Make a selection from the list. **Minimum access level to change the setting:** Expert	Level, Distance, Sensor Value, Reflection ②	Level
C5.1.4.3	Tertiary Var.	This is the third measurement type shown on HART® controllers. Make a selection from the list. **Minimum access level to change the setting:** User	Level, Distance, Sensor Value, Reflection ②	Reflection
C5.1.4.4	Quaternary Var.	This is the fourth measurement type shown on HART® controllers. Make a selection from the list. **Minimum access level to change the setting:** User	Level, Distance, Sensor Value, Reflection ②	Sensor Value

C6 Display

C6.1	Language	Data can be shown in one of the languages stored in the device. Make a selection from the list. **Minimum access level to change the setting:** User	English, German, French, Italian, Portuguese, Spanish, Czech, Polish, Chinese (simplified), Japanese, Russian, Turkish	English
C6.2	Backlight	If you set this menu item to "Enabled", a light comes on when you push a button on the display keypad and if the loop current is more than 6 mA. **Minimum access level to change the setting:** User	Disabled, Enabled	Enabled
C6.3	Contrast	The contrast control for the display screen. You can select a shade of grey between light grey (-10) and black (+10). **Minimum access level to change the setting:** User	min-max: -10...+10	0
C6.4 1st Meas. Page				
C6.4.1	Function	This menu item changes the configuration of data shown on the display screen in Normal mode. There are two measurement pages available to show readings in Normal mode. This setting is for the first page. **Minimum access level to change the setting:** User	One Value, One Value & Bar, Two Values, Two Values & Bar, Three Values	One Value & Bar

Menu No.	Function	Function description	Selection list	Default
C6.4.2	1st Value Variable	This changes the measurement type of the first value on the measurement page. **Minimum access level to change the setting:** User	Level, Distance, Sensor Value, Reflection ②	Distance
C6.4.3	0% Range	This is the 0% value given to the bar graph indicator in Normal mode. The range is related to the measurement type set in C6.4.2 1st Value Variable. This menu item is only available if you set C6.4.1 Function to "One Value & Bar" or "Two Values & Bar". **Minimum access level to change the setting:** User	Refer to "Function description".	Refer to "Function description".
C6.4.4	100% Range	This is the 100% value given to the bar graph indicator in Normal mode. The range is related to the measurement type set in C6.4.2 1st Value Variable. This menu item is only available if you set C6.4.1 Function to "One Value & Bar" or "Two Values & Bar". **Minimum access level to change the setting:** User	Refer to "Function description".	Refer to "Function description".
C6.4.5	Format 1st Value	You can change the number of decimal places that are shown for the first value on the measurement page in Normal mode. For example, if you set this menu item to "X.XX", the value shown will be corrected to 2 decimal places. If you set this menu item to "Automatic", the device will adjust the number of decimal places automatically. **Minimum access level to change the setting:** User	X, X.X, X.XX, X.XXX, X.XXXX, X.XXXXX, X.XXXXXXX, Automatic	X.XXX
C6.4.6	2nd Value Variable	This changes the measurement type of the second value on the measurement page. This menu item is only available if you set C6.4.1 Function to "Two Values", "Two Values & Bar" or "Three Values". **Minimum access level to change the setting:** User	Level, Distance, Sensor Value, Reflection ②	Level
C6.4.7	Format 2nd Value	You can change the number of decimal places that are shown for the second value on the measurement page in Normal mode. For example, if you set this menu item to "X.XX", the value shown will be corrected to 2 decimal places. If you set this menu item to "Automatic", the device will adjust the number of decimal places automatically. **Minimum access level to change the setting:** User	X, X.X, X.XX, X.XXX, X.XXXX, X.XXXXX, X.XXXXXXX, Automatic	X.XXX
C6.4.8	3rd Value Variable	This changes the measurement type of the third value on the measurement page. This menu item is only available if you set C6.4.1 Function to "Three Values". **Minimum access level to change the setting:** User	Level, Distance, Sensor Value, Reflection ②	Reflection

Menu No.	Function	Function description	Selection list	Default
C6.4.9	Format 3rd Value	You can change the number of decimal places that are shown for the second value on the measurement page in Normal mode. For example, if you set this menu item to "X.XX", the value shown will be corrected to 2 decimal places. If you set this menu item to "Automatic", the device will adjust the number of decimal places automatically. **Minimum access level to change the setting:** User	X, X.X, X.XX, X.XXX, X.XXXX, X.XXXXX, X.XXXXXXX, Automatic	Automatic
C6.5 2nd Meas. Page				
C6.5.1	Function	This menu item changes the configuration of data shown on the display screen in Normal mode. There are two measurement pages available to show readings in Normal mode. This setting is for the second page. **Minimum access level to change the setting:** User	One Value, One Value & Bar, Two Values, Two Values & Bar, Three Values	Three Values
C6.5.2	1st Value Variable	This changes the measurement type of the first value on the measurement page. **Minimum access level to change the setting:** User	Level, Distance, Sensor Value, Reflection ②	Distance
C6.5.3	0% Range	This is the 0% value given to the bar graph indicator in Normal mode. The range is related to the measurement type set in C6.5.2 1st Value Variable. This menu item is only available if you set C6.5.1 Function to "One Value & Bar" or "Two Values & Bar". **Minimum access level to change the setting:** User	Refer to "Function description".	Refer to "Function description".
C6.5.4	100% Range	This is the 100% value given to the bar graph indicator in Normal mode. The range is related to the measurement type set in C6.5.2 1st Value Variable. This menu item is only available if you set C6.5.1 Function to "One Value & Bar" or "Two Values & Bar". **Minimum access level to change the setting:** User	Refer to "Function description".	Refer to "Function description".
C6.5.5	Format 1st Value	You can change the number of decimal places that are shown for the first value on the measurement page in Normal mode. For example, if you set this menu item to "X.XX", the value shown will be corrected to 2 decimal places. If you set this menu item to "Automatic", the device will adjust the number of decimal places automatically. **Minimum access level to change the setting:** User	X, X.X, X.XX, X.XXX, X.XXXX, X.XXXXX, X.XXXXXXX, Automatic	X.XXX
C6.5.6	2nd Value Variable	This changes the measurement type of the second value on the measurement page. This menu item is only available if you set C6.5.1 Function to "Two Values", "Two Values & Bar" or "Three Values". **Minimum access level to change the setting:** User	Level, Distance, Sensor Value, Reflection ②	Level

Menu No.	Function	Function description	Selection list	Default
C6.5.7	Format 2nd Value	You can change the number of decimal places that are shown for the second value on the measurement page in Normal mode. For example, if you set this menu item to "X.XX", the value shown will be corrected to 2 decimal places. If you set this menu item to "Automatic", the device will adjust the number of decimal places automatically. **Minimum access level to change the setting:** User	X, X.X, X.XX, X.XXX, X.XXXX, X.XXXXX, X.XXXXXXX	X.XXX
C6.5.8	3rd Value Variable	This changes the measurement type of the third value on the measurement page. This menu item is only available if you set C6.5.1 Function to "Three Values". **Minimum access level to change the setting:** User	Level, Distance, Sensor Value, Reflection ②	Reflection
C6.5.9	Format 3rd Value	You can change the number of decimal places that are shown for the second value on the measurement page in Normal mode. For example, if you set this menu item to "X.XX", the value shown will be corrected to 2 decimal places. If you set this menu item to "Automatic", the device will adjust the number of decimal places automatically. **Minimum access level to change the setting:** User	X, X.X, X.XX, X.XXX, X.XXXX, X.XXXXX, X.XXXXXXX, Automatic	Automatic

C7 Device

C7.1 Information				
C7.1.1	Tag	Use this menu item to read the Tag name.	Read only	TANK01 ①
C7.1.2	Serial Number	This is the device fabrication number	Read only	—
C7.1.3	Device Name	This gives the device family name and model code.	Read only	—
C7.1.4	V Number	This is the manufacturer's option code for device configuration.	Read only	—
C7.1.5	Electronic Revision	This is the hardware revision number. This number agrees with NAMUR NE 53 Guidelines.	Read only	—
C7.1.6	Software Revision	This is the software revision number. This number agrees with NAMUR NE 53 Guidelines.	Read only	—
C7.1.7	Electronic Serial No.	This is the hardware fabrication number. This number agrees with NAMUR NE 53 Guidelines.	Read only	—
C7.1.8	Production Date	This the date that the manufacturer finished the device. The date format is: Year-Month-Day.	Read only	—
C7.1.9	Calibration Date	This the date that the manufacturer calibrated the device. The date format is: Year-Month-Day.	Read only	—

Menu No.	Function	Function description	Selection list	Default
C7.2 Security				
C7.2.1	Login	Enter the appropriate password here to change settings. If you do not enter the password, you can only change settings for the "user" access level. For more data and the default passwords for the "operator" and "expert" access levels, refer to *Protection of the device settings (access levels)* on page 66.	4-digit hexadecimal password	Refer to "Function description"
C7.2.2	Change Password	This changes the password for the "operator" and "expert" access levels. For the procedure to change the password, refer to *Protection of the device settings (access levels)* on page 66 (How to change the password).	4-digit hexadecimal password	Refer to "Function description"
C7.2.3	Reset Passwords	This is a special password that makes your passwords for the "operator" and "expert" access levels go back to the default passwords. This password is supplied on request by the after-sales service department.	—	—
C7.2.4	Unlock Extended Range	This menu item can only be unlocked at the factory.	—	—
C7.2.5	Unlock SIL	This menu item can only be unlocked at the factory.	—	—
C7.3 Errors				
C7.3.1	Message View	A log of device errors. Scroll down the list and push [>] to show the error details. The error will have a letter code ("F", "S", "M", "C" and "I") that agrees with NAMUR NE 107 Guidelines.	Read only	—
C7.3.2 Error-Mapping				
C7.3.2.1	Sensor: Information	This permits you to change the error code that is given to an incident. **Minimum access level to change the setting:** User	None, Information (I), Maintenance Request (M), Out of Specification (S), Function Check (C), Failure (F)	Information
C7.5 Units				
C7.5.1	Length	The length unit shown in Normal mode. If you set this menu item to "Cst." (custom length unit), enter values in menu items C7.5.2.1 thru C7.5.2.3. **Minimum access level to change the setting:** User	m, cm, mm, ft, in, Cst.	m
C7.5.2 Cst. Length				
C7.5.2.1	Text	Enter a text (8 characters maximum) for the custom length unit.	—	Cst.
C7.5.2.2	Offset	Enter an offset value.	—	0.0 m
C7.5.2.3	Factor	Enter a factor. Multiply the measured value by this factor to change m (metres) to the custom length unit.	—	1.0

Menu No.	Function	Function description	Selection list	Default
C7.5.3	Volume	The volume unit shown in Normal mode if you made a volume table in the C3 Conversion menu. If you set this menu item to "Cst. Volume" (custom volume unit), enter values in menu items C7.5.4.1 thru C7.5.4.3. **Minimum access level to change the setting:** User	m³, L, hL, in³, ft³, gal, ImpGal, yd³, bbl, bbl (beer, US), Cst. Volume	m³
C7.5.4 Cst. Volume				
C7.5.4.1	Text	Enter a text (8 characters maximum) for the custom volume unit.	—	Cst.
C7.5.4.2	Offset	Enter an offset value.	—	0.0 m³
C7.5.4.3	Factor	Enter a factor. Multiply the measured value by this factor to change m³ (cubic metres) to the custom volume unit.	—	1.0
C7.5.5	Mass	The mass unit shown in Normal mode if you made a mass table in the C3 Conversion menu. If you set this menu item to "Cst. Mass" (custom mass unit), enter values in menu items C7.5.6.1 thru C7.5.6.3. **Minimum access level to change the setting:** User	kg, t, lb, tn.sh., tn.l., Cst. Mass	kg
C7.5.6 Cst. Mass				
C7.5.6.1	Text	Enter a text (8 characters maximum) for the custom volume unit.	—	Cst.
C7.5.6.2	Offset	Enter an offset value.	—	0.0kg
C7.5.6.3	Factor	Enter a factor. Multiply the measured value by this factor to change kg (kilogram) to the custom mass unit.	—	1.0
C7.6 Factory Default				
C7.6.1	Reset to Fact. Def.?	If you set this menu item to "YES", the device goes back to its initial settings (set by the manufacturer in the factory). **Minimum access level to change the setting:** Expert	Yes, No	No

① If no value or parameter is specified in the customer order

② "Lin. Distance" and "Lin. Level" are available if you created a linearized value table in menu C3 Conversion. "Volume" and "Ullage Volume" are available if you created a level-volume table in menu C3 Conversion. "Mass" and "Ullage Mass" are available if you created a level-mass table in menu C3 Conversion.

6.4 Further information on device configuration in Program mode

6.4.1 Standard setup

Use this procedure (menu item A4.1 Standard Setup) to change the length unit, tank type, tank height, current output variable, 0% range, 100% range, current output range and error function. Values and parameters that can be changed are shown between the « ... » marks in the illustrations that follow. Push the keypad buttons in the correct sequence:

CAUTION!
Make sure that you do this procedure before you use the device. The settings in this procedure have an effect on the performance of the device.

INFORMATION!
Current output and LCD display settings
*When you do the **Standard setup** procedure, the measurement value on the first measurement page of the LCD display (in Normal mode) automatically uses settings with the same parameters and values as the current output settings (measurement variable, 0% range and 100% range). The first measurement page shows "one value and bar" by default. If you must show one or more measurement values that are different to the transmitted output signal, change the settings in the C6.4 1st Meas. Page and C6.5 2nd Meas. Page menus. For more data, refer to Function description on page 78 – table C. Full Setup menu (C6 Display).*

Procedure

Screen	Steps	Description
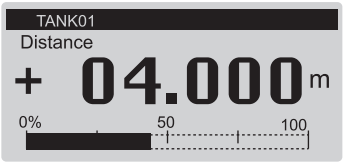	• 2 × [>], 2 × [▼] and [>].	Default screen. Enter Program mode and go to menu item A3 Login.
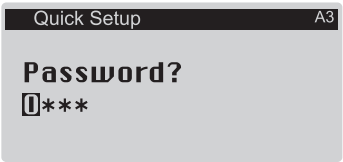	• If it is the default password: 2 × [>], 5 × [▲], [>] and 8 × [▲] • [↵] to confirm.	Enter the password used at this time for the "Expert" access level. If it is the default password, enter "0058".
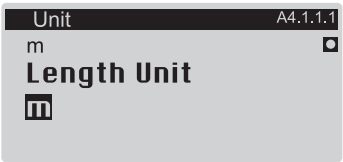	• [▼] and 2 × [>] • [▲] or [▼] for the selection of the length unit (m, Cst., in, ft, mm or cm). • [↵] to confirm.	Push these buttons to start the Standard Setup procedure. Length unit. Make a selection from the list of parameters.
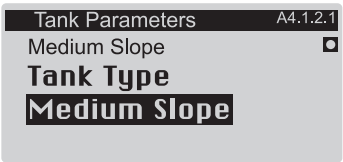	• [▲] or [▼] for the selection of the tank type (Flat Surface, Medium Slope or Steep Slope). • [↵] to confirm.	Tank type. Make a selection from the list of parameters. If the surface of the product is flat, select "Flat Surface". If the surface of the product is has a small angle, select "Medium Slope". If the surface of the product has a large angle, select "Steep Slope".

Screen	Steps	Description
Tank Parameters A4.1.2.2 10.000 **Tank Height** **10.0000 m** 0.000... 60.000	• [>] to change the position of the cursor. • [▼] to decrease the value (or move the decimal point one digit to the left) or [▲] to increase the value (or move the decimal point one digit to the right). • [↵] to confirm.	Tank height. The distance from the flange face / thread stop of the tank connection down to the tank bottom. If the tank has a dish-shaped or conical bottom, the tank height is measured to a point on the tank bottom directly below the antenna. 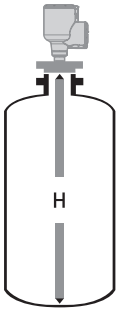
Current Out 1 A4.1.3.1 Distance **Current Out. 1 Var.** **Distance**	• [▲] or [▼] for the selection of the measurement name (Distance, Level, Sensor Value or Reflection, Volume (Mass), Ullage Volume (Ullage Volume). • [↵] to confirm.	Current output 1 variable. The manufacturer sets the current output variable (for current output 1) to "Distance" before delivery. If it is necessary to measure volume, ullage volume, mass or ullage mass, refer to *How to configure the device to measure volume or mass* on page 108.
Current Out 1 A4.1.3.2 0.0000 **0% Range** **+0.00000 m** -4900.0... +5100.0	• [>] to change the position of the cursor. • [▼] to decrease the value (or move the decimal point one digit to the left) or [▲] to increase the value (or move the decimal point one digit to the right). • [↵] to confirm.	0% range. Use this step to give the 0% output setting in the tank. Refer to the illustrations that follow. When menu item **A4.1.3.1 Current Out. 1 Var.** is set to "Level", illustration ① shows the position of 0% output as a level above the tank bottom. When menu item **A4.1.3.1 Current Out. 1 Var.** is set to "Distance", illustration ② shows the position of 0% output as a distance below the flange facing or thread stop of the process connection. 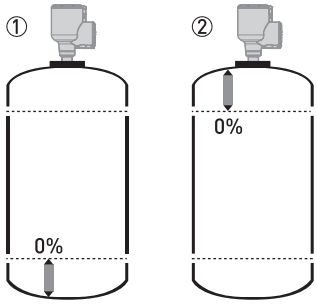

Screen	Steps	Description
Current Out 1 A4.1.3.3 10.000 **100% Range** **+10.0000 m** -4900.0... +5100.0	• [>] to change the position of the cursor. • [▼] to decrease the value (or move the decimal point one digit to the left) or [▲] to increase the value (or move the decimal point one digit to the right). • [↵] to confirm.	100% range. Use this step to give the 100% output setting in the tank. Refer to the illustrations that follow. Illustration ① shows the settings for level. Illustration ② shows the settings for distance. Refer to the illustrations that follow. When menu item **A4.1.3.1 Current Out. 1 Var.** is set to "Level", illustration ① shows the position of 100% output as a level above the tank bottom. When menu item **A4.1.3.1 Current Out. 1 Var.** is set to "Distance", illustration ② shows the position of 100% output as a distance below the flange facing or thread stop of the process connection. 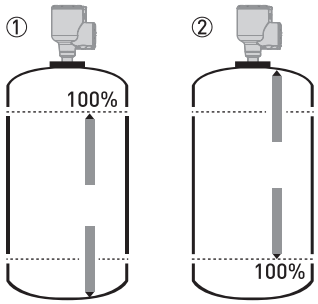
Current Out 1 A4.1.3.4 4-20 mA **Current Out. Range** **4-20 mA**	• [▲] or [▼] for the selection of the current output range (3.8-20.5 mA (NAMUR), 4-20 mA, 3.8-20.5 mA (reversed) or 4-20 mA (reversed). • [↵] to confirm.	Current output range. This menu item gives current output values to the measuring range between 0% and 100% values given in the "0% range" and "100% range" steps. **If you set this menu item to "4-20 mA" or "3.8-20.5 mA":** • 0% Range = 4 mA • 100% Range = 20 mA **If you set this menu item to "4-20 mA (reversed)" or "3.8-20.5 mA (reversed)":** • 0% Range = 20 mA • 100% Range = 4 mA
Current Out 1 A4.1.3.5 Low **Error Function** **High**	• [▲] or [▼] for the selection of the error function (Off, Hold, High or Low). • [↵] to confirm.	Error Function. This sets the behaviour of current output 1 if an error occurs. If this menu item is set to "Off", no signal is given (this parameter is not available if menu item C4.1.4 is set to "3.8-20.5 mA" (NAMUR) or "3.8-20.5 mA (reversed)"). If this menu item is set to "Hold", the output current stays at the value where the error occurred (this parameter is not available if menu item C4.1.4 is set to "3.8-20.5 mA" (NAMUR) or "3.8-20.5 mA (reversed)"). If this menu item is set to "Low", the output current changes to 3.5 mA (default value) if an error occurs. If this menu item is set to "High", the output current changes to 21.5 mA (default value) if an error occurs.
A **Save Configuration?** **Yes**	• 3 × [↵] to confirm. • [▲] or [▼] for the selection of the save option (Yes, No or Back). • [↵] to confirm.	**Save Configuration?** screen. Set to "Yes" to save and use the settings and data and go back to Normal mode. Set to "No" to cancel the changes to the device settings and go back to Normal mode. Set to "Back" to stay in Program mode.

6.4.2 Empty spectrum recording

The empty spectrum recording procedure is important for the performance of the device. We recommend that the tank is empty or only filled to the minimum level before you do the procedure.

Use this procedure (menu item A4.2 Empty Spectrum) if there are fixed and moving objects in the tank that can cause interference signals. The device does a scan for objects that do not change their vertical positions in the tank (heating tubes, agitators, fuel assemblies etc.) and records the data. The device can then use this data to put the measurement signal through a filter (empty spectrum).

When the empty spectrum filter is on (when menu item C2.8 Empty Spectrum Enable is set to "Enable"), it will ignore the interference signals.

CAUTION!
Make sure that the tank is empty or only filled to the minimum level.

INFORMATION!
Because the device records the empty spectrum data, it is not necessary to do the procedure again if you de-energize the device.

Before you do the empty spectrum recording procedure, install the device on the tank. For more data about how to install the device, refer to *Installation* on page 22.

Values and parameters that can be changed are shown between the « ... » marks in the illustrations that follow. Push the keypad buttons in the correct sequence:

Procedure

Screen	Steps	Description
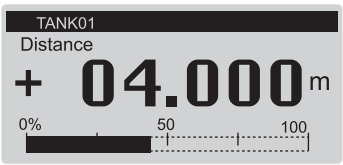	• 2 × [>], 2 × [▼] and [>].	Default screen. Enter Program mode and go to menu item A3 Login.
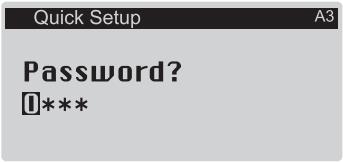	• If it is the default password: 2 × [>], 5 × [▲], [>] and 8 × [▲] • [↵] to confirm.	Enter the password used at this time for the "Expert" access level. If it is the default password, enter "0058".

Screen	Steps	Description
Record Spectrum A4.2.1.1 Full, Average **Empty Spectrum Type** **Partial, Average**	• [▼], [>], [▼] and 2 × [>]. • [▲] or [▼] for the selection of the empty spectrum type (Full (Average), Full (Max), Partial (Average), Partial (Max)). • [↵] to confirm.	Push these buttons to start the Record Spectrum (Empty Spectrum) procedure. Empty spectrum type. Make a selection from the list of parameters. If you can empty the tank, set this menu item to "Full, Average" or "Full, Max". If you cannot empty the tank, set this menu item to "Partial, Average" or "Partial, Max". If you use air blowers to decrease the angle of the product surface, set **Empty Spectrum Type** to "Partial, Max".
Record Spectrum A4.2.1.2 0.0000 **Partial Distance** **3.50000** 0.0000... 100.00 []	• [>] to change the position of the cursor. • [▼] to decrease the value (or move the decimal point one digit to the left) or [▲] to increase the value (or move the decimal point one digit to the right). • [↵] to confirm.	Partial distance. If you set **Empty Spectrum Type** to "Partial, Average" or "Partial, Max", you will have one more step to do in this procedure. You must give a "partial distance" value less than or equal to the distance to the product surface from the flange facing or thread stop of the process connection. **CAUTION!** If the "partial distance" value is more than the distance to the product surface, then the device will filter the level signal and the device will not measure the level of the product correctly.
Record Spectrum A4.2.1.3 **Please ensure that the tank is sufficiently empty and all moving parts are enabled.**	• [↵] to confirm.	Make sure that the tank is empty or it contains not more than the minimum quantity. Energize and operate all equipment that moves in the silo.
Record Spectrum A4.2.1.4 **Start Recording?** **Yes**	• [▼] or [▲] to change the parameter ("No" or "Yes"). • [↵] to confirm.	Start recording? Set this menu item to "Yes" to continue to the subsequent step. Set this menu item to "No" to go back to the menu.
Empty Spectrum A4.2.1.9 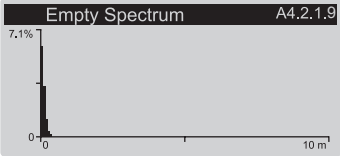	• [↵] to confirm.	Graph with the results of the empty spectrum recording.
Record Spectrum A4.2.1.10 No **Save Spectrum?** **Yes**	• [▼] or [▲] to change the parameter ("No" or "Yes"). • [↵] to confirm.	Save spectrum? If you set the menu item to "Yes", the device will keep this empty spectrum recording. If you set the menu item to "No", the device will reject this data.

Screen	Steps	Description
Record Spectrum A4.2.1.11 Disabled Empty Spectrum Enable Enabled	• [▼] or [▲] to change the parameter ("Disable" or "Enable"). • [↵] to confirm.	Empty Spectrum Enable. If you set the menu item to "Enable", the device will use the empty spectrum recording data. If you set the menu item to "Disable", the device will not use the empty recording data at this time.
A Save Configuration? Yes	• 4 × [↵] to confirm. • [▲] or [▼] for the selection of the save option (Yes, No or Back). • [↵] to confirm.	**Save Configuration?** screen. Set to "Yes" to save and use the settings and data and go back to Normal mode. Set to "No" to cancel the changes to the device settings and go back to Normal mode. Set to "Back" to stay in Program mode.

6.4.3 HART® network configuration

INFORMATION!
For more data, refer to Networks on page 53.

The device uses HART® communication to send information to HART®-compatible equipment. It can operate in either point-to-point or multi-drop mode. The device will communicate in multi-drop mode if you change the polling address.

CAUTION!
Make sure that the address for this device is different from others in the multi-drop network.

INFORMATION!
Make sure that menu item C5.1.1 Current Loop Mode is set to "On".

How to change from point-to-point to multi-drop mode

- Enter Program mode.
- Push 2 × [▼], [>], 3 × [▼], 2 × [>], [▼] and 2 × [>] to go to menu item C5.1.2.1 Polling Address.
- Enter the password used at this time for the "Expert" access level. If it is the default password, enter "0058". Push [↵] to confirm.
- Enter a value between 001 and 063 and push [↵] to confirm.
- Push [↵] again and again to go back to the **Save Configuration?** screen.
- Push [▲] or [▼] to set the screen to "Yes" and push [↵].

➲ The output is set to multi-drop mode. The current output is set to 4 mA. This value does not change in multi-drop mode.

How to change from multi-drop to point-to-point mode

- Enter Program mode.
- Push 2 × [▼], [>], 3 × [▼], 2 × [>], [▼] and 2 × [>] to go to menu item C5.1.2.1 Polling Address.
- Enter the password used at this time for the "Expert" access level. If it is the default password, enter "0058". Push [↵] to confirm.
- Enter the value 000 and push [↵] to confirm.
- Push [↵] again and again to go back to the **Save Configuration?** screen.

- Push [▲] or [▼] to set the screen to "Yes" and push [↵].

➲ The output is set to point-to-point mode. The current output changes to a range of 4...20 mA or 3.8...20.5 mA (this range is set in menu item C4.1.4 Current Out. Range).

6.4.4 Distance measurement

The device gives a current output signal that is related to distance measurements when the menu item **C4.1.1 Current Out. 1 Var. (Current Output 1 Variable)** is set to "Distance".

The display screen of the device can show distance measurement readings if one or more of the "Value Variable" menu items in the C6.4 1st Measurement Page or C6.5 2nd Measurement Page menu are set to "Distance".

Menu items related to distance measurement are:

- Current output 1 menu (C4.1)
- Tank Height (C1.2)
- Blocking Distance (C1.5)
- Reference Offset (C1.10)
- **Display readings in Normal mode:** 1st Meas. Page (C6.4) menu
- **Display readings in Normal mode:** 2nd Meas. Page (C6.5) menu

The flange facing is the reference point for distance measurement (0 m / 0 ft / 0"). The position of the measurement scale (specified by the 0% Range and 100% Range settings) is related to this reference point. If you configured a measurement scale for the current output signal in the C4.1 Current output 1 menu, you can use a "standard scale" or a "reversed scale". On the standard scale, the 0% Range measurement value agrees with an output of 4 mA and the 100% Range measurement value agrees with an output of 20 mA. On the reversed scale, the 0% Range measurement value agrees with an output of 20 mA and the 100% Range measurement value agrees with an output of 4 mA.

You can change the reference point from which distance is measured. Use this menu item:

- Reference Offset (C1.10)

INFORMATION!
Menu item C1.10 Reference Offset
If you move the reference point above the flange, make sure that you add the value given in menu item C1.10 Reference Offset when you give a distance for the C4.1.2 0% Range and C4.1.3 100% Range settings. If you move the reference point below the flange, subtract the value given in menu item C1.10 Reference Offset when you give a distance for the C4.1.2 0% Range and C4.1.3 100% Range settings.

CAUTION!
If C4.1.1 Current Out. 1 Var. is set to "Distance" and C4.1.2 0% Range (standard scale) is set in the blocking distance, then the device will not be able to use the full current output range.

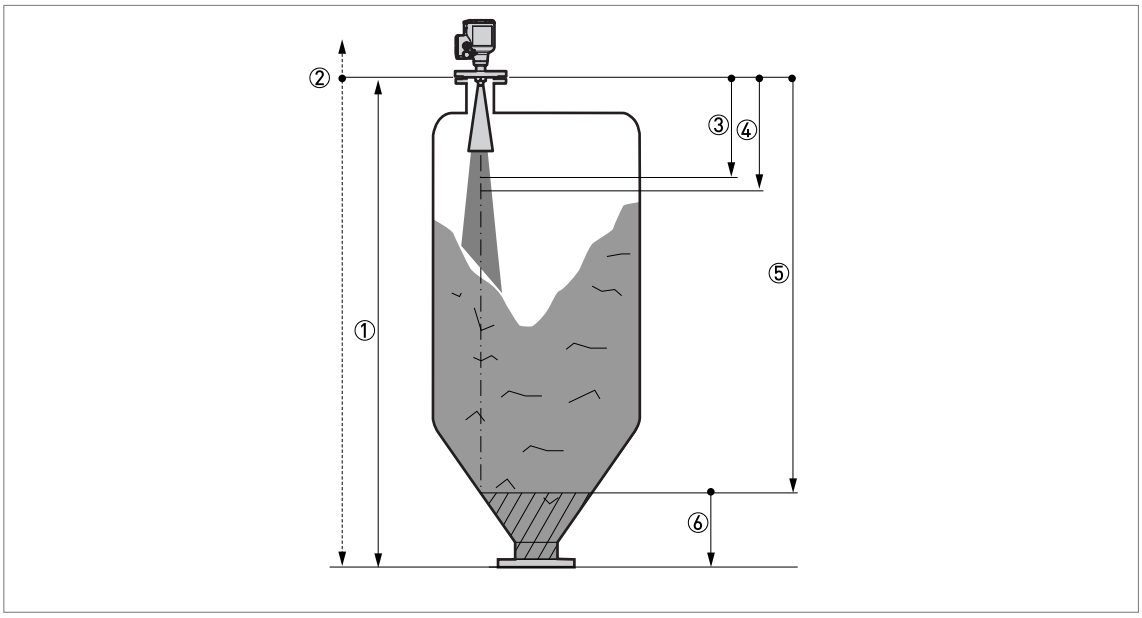

Figure 6-7: Distance measurement

① Tank Height (C1.2)
② Reference point. You can use menu item C1.10 Reference Offset to move the reference point.
③ Blocking Distance (C1.5)
④ 0% Range (C4.1.2), if menu item C4.1.4 Current Out. Range is set to "4-20mA" or "3.8-20.5mA"
⑤ 100% Range (C4.1.3), if menu item C4.1.4 Current Out. Range is set to "4-20mA" or "3.8-20.5mA"
⑥ Non-measurement zone

For more data about the menu items, refer to *Function description* on page 78 – table C. Full Setup menu.

INFORMATION!
Bar graph function in Normal mode
There is an optional bar graph shown on the two measurement pages in Normal mode (set C6.4.1 / C6.5.1 (Function) to "One Value & Bar" or "Two Values & Bar"). By default, the bar graph on the 1st Measurement Page shows a value related to the measurement scale specified in the C4.1 Current output 1 menu. It is possible to give different measurement scales and measurement variables for the bar graphs in Normal mode. For more data, refer to Function description on page 78– table C. Full Setup menu (C6 Display). The bar graph range is related to the parameters given in the menu item C6.4.2 and C6.5.2 (1st Value Variable) and menu C1 Install. Parameters.
If you change C1.10 Reference Offset, then we recommend that you change C6.4.3 / C6.5.3 (0% Range) and C6.4.4 / C6.5.4 (100% Range) by the same quantity.

6.4.5 Level measurement

The device gives a current output signal that is related to level measurements when the menu item **C4.1.1 Current Out. 1 Var. (Current Output 1 Variable)** is set to "Level".

The display screen of the device can show level measurement readings if one or more of the "Value Variable" menu items in the C6.4 1st Measurement Page or C6.5 2nd Measurement Page menu are set to "Level".

Menu items related to level measurement are:

- Current output 1 menu (C4.1)
- Tank Height (C1.2)
- Blocking Distance (C1.5)
- Tank Bottom Offset (C1.11)
- **Display readings in Normal mode:** 1st Meas. Page (C6.4) menu
- **Display readings in Normal mode:** 2nd Meas. Page (C6.5) menu

The tank bottom (specified in menu item C1.2 Tank Height) is the reference point for level measurement (0 m / 0 ft / 0¨). The position of the measurement scale (specified by the 0% Range and 100% Range settings) is related to this reference point. If you configured a measurement scale for the current output signal in the C4.1 Current output 1 menu, you can use a "standard scale" or a "reversed scale". On the standard scale, the 0% Range measurement value agrees with an output of 4 mA and the 100% Range measurement value agrees with an output of 20 mA. On the reversed scale, the 0% Range measurement value agrees with an output of 20 mA and the 100% Range measurement value agrees with an output of 4 mA.

You can change the reference point from which level is measured. Use this menu item:

- Tank Bottom Offset (C1.11)

INFORMATION!
C1.11 Tank Bottom Offset
If you move the tank bottom offset below the tank bottom, add the value given in C1.11 Tank Bottom Offset when you give a level for the C4.1.2 0% Range and C4.1.3 100% Range settings. If you move the tank bottom offset above the tank bottom, subtract the value given in C1.11 Tank Bottom Offset when you give a level for the C4.1.2 0% Range and C4.1.3 100% Range settings.

CAUTION!
If C4.1.1 Current Out. 1 Var. is set to "Level" and C4.1.3 100% Range (standard scale) is set in the blocking distance, then the device will not be able to use the full current output range.

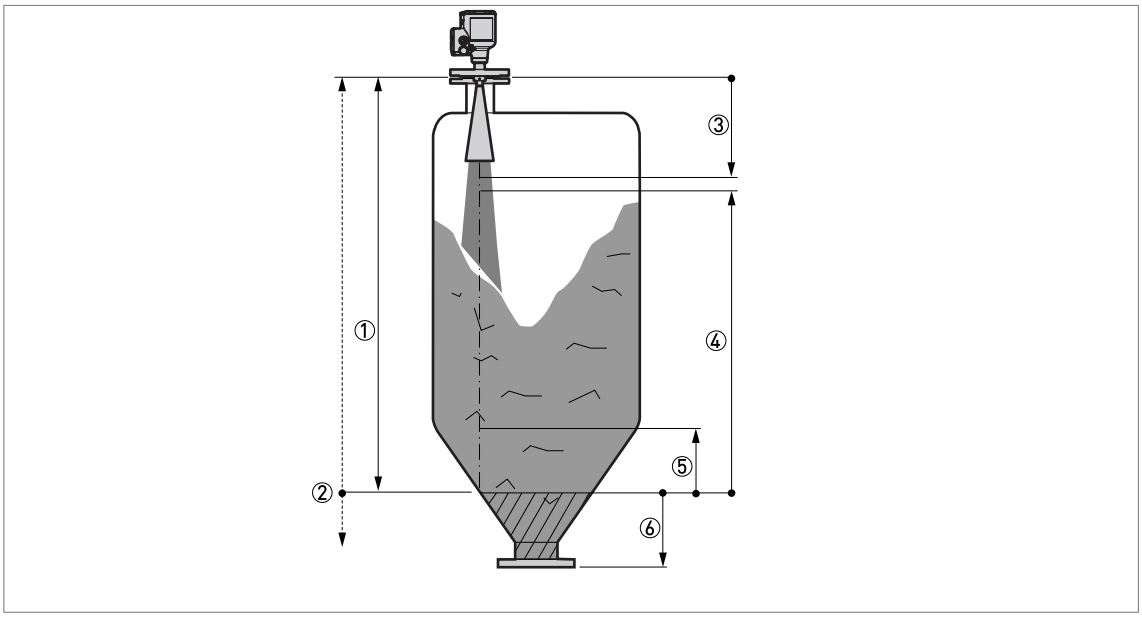

Figure 6-8: Level measurement

① Tank Height (C1.2)
② Tank bottom reference point. You can use menu item C1.11 Tank Bottom Offset to move the position of the tank bottom reference point.
③ Blocking Distance (C1.5)
④ 100% Range (C4.1.3), if menu item C4.1.4 Current Out. Range is set to "4-20mA" or "3.8-20.5mA"
⑤ 0% Range (C4.1.2), if menu item C4.1.4 Current Out. Range is set to "4-20mA" or "3.8-20.5mA"
⑥ Non-measurement zone

For more data about the menu items, refer to *Function description* on page 78 – table C. Full Setup menu.

INFORMATION!
Bar graph function in Normal mode
There is an optional bar graph shown on the two measurement pages in Normal mode (set C6.4.1 / C6.5.1 (Function) to "One Value & Bar" or "Two Values & Bar"). By default, the bar graph on the 1st Measurement Page shows a value related to the measurement scale specified in the C4.1 Current output 1 menu. It is possible to give different measurement scales and measurement variables for the bar graphs in Normal mode. For more data, refer to Function description on page 78 – table C. Full Setup menu (C6 Display). The bar graph range is related to the parameters given in the menu item C6.4.2 and C6.5.2 (1st Value Variable) and menu C1 Install. Parameters.
If you change C1.11 Tank Bottom Offset, then we recommend that you change C6.4.3 / C6.5.3 (0% Range) and C6.4.4 / C6.5.4 (100% Range) by the same quantity.

6.4.6 How to configure the device to measure volume or mass

The device can be configured to measure volume or mass. It can also be configured to a custom quantity to be measured. You can set up a strapping table in the conversion menu (C3 Conversion). Each entry is a pair of data (level – volume, level – mass or level – custom measurement). The strapping table must have a minimum of 2 entries and a maximum of 50. The reference point for the table is the bottom of the tank (as given in menu item Tank Height (C1.2).

CAUTION!
Enter the data in numerical sequence (strapping table entry number 01, 02 etc.).

How to prepare a strapping table (conversion table)

- Enter Program mode.
- Push 2 × [▲], [>], 6 × [▲], [>], 3 × [▲] and 3 × [>] to go to C7.5.1 Length.
- Push [▲] and [▼] to find the length unit that you will use in the table.
- If it is necessary to make a volume table, push [↵] to go back to the sub-menu level and then push 2 × [▲] and [>] to go to C7.5.3 Volume.
- Push [▲] and [▼] to find the volume unit that you will use in the table.
- Push 2 × [↵] to go to sub-menu level "C7" and then 2 × [▲] and 2 × [>] to go to C7.2.1 Login. Enter the password used at this time for the "Expert" access level. If it is the default password, enter "0058".
- Push 3 × [↵] to go to the sub-menu level "C" and then 4 × [▲], 2 × [>] to go to C3.1 Edit Table to delete strapping table data that the device uses at this time (Erase Table?). Push [▲] and [▼] to set this menu item to "Yes" to delete the data.
- Push [↵] and then [▲] and [▼] to make a selection from the conversion table options (volume, mass or linearization).
- Push [↵] to go to the sub-menu level and then [▼] and [>] to enter the first point on the table.
- Push [↵] to make the strapping table.
- Enter the level value and push [↵].
- Enter the conversion value and push [↵] to go to the sub-menu level.
- Push [>] to enter the subsequent point (02, 03, ..., 50) on the table.
- Repeat the last 3 steps to complete the table.
- If the table is complete, push [↵] again and again to go back to the "Save Configuration?" screen.
- The device will ask you to save or cancel your settings. Push [▲] or [▼] to make a selection from **Yes**, **No** or **Back**. **Back** makes the display go back to Program mode. If this screen is set to "Yes" or No", push [↵] to accept (Yes) or reject (No) the new settings.

➲ If you push [↵] when the screen is set to "Yes", the device will store the data for the strapping table and go back to Normal mode.

The device will give more accurate volume readings if you give more conversion data in these areas:

- Surfaces with curves.
- Sudden changes in the cross section.

Refer also to the illustration that follows:

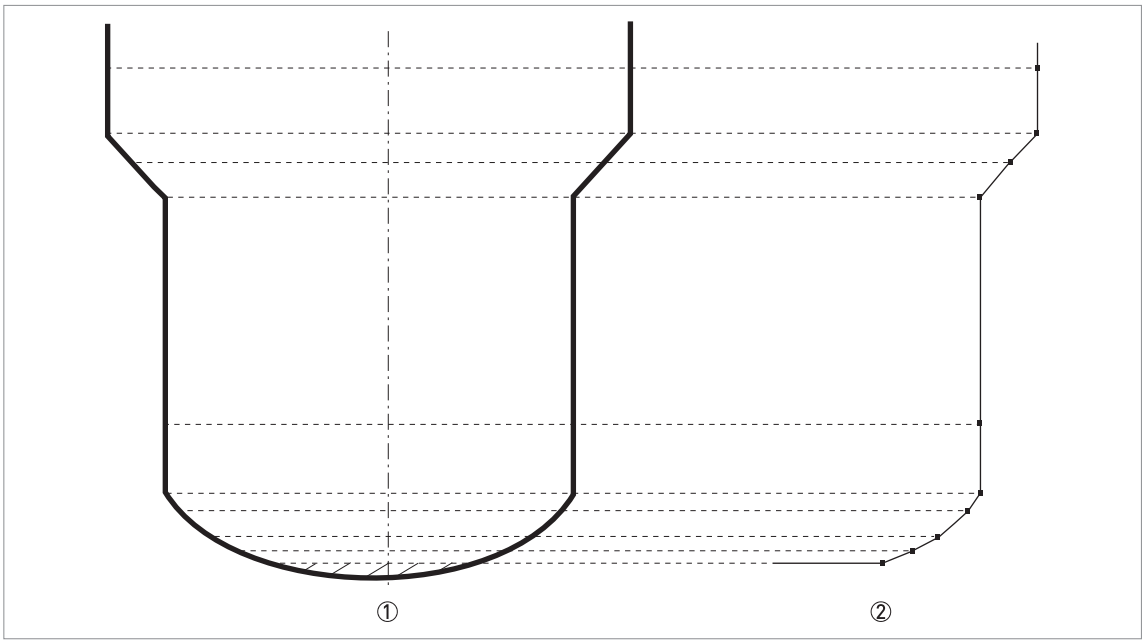

Figure 6-9: A plot of points for a volume or mass table

① Silo with reference points
② Silo model with plotted points

How to delete a volume or mass table

- Enter Program mode.
- Push 2 × [▲], [>], 2 × [▲] and 2 × [>] to go to C3.1.1 Erase Table?.
- To delete strapping table data that the device uses at this time (Erase Table?), push [▲] and [▼] to set this menu item to "Yes".
- Push [↵] again and again to go back to the "Save Configuration?" screen.
- The device will ask you to save or cancel your settings. Push [▲] or [▼] to make a selection from **Yes**, **No** or **Back**. **Back** makes the display go back to Program mode. If this screen is set to "Yes" or No", push [↵] to accept (Yes) or reject (No) the new settings.

➲ If you push [↵] when the screen is set to "Yes", the device will delete the data for the strapping table and go back to Normal mode.

6.4.7 How to measure correctly in silos with curved or conical bottoms

It is possible that the device cannot find the bottom of the silo if it is installed in a silo with a dish-shaped or conical bottom. The form of the silo bottom causes a delayed radar reflection and the device will display the error message "Measurement is lost in the tank bottom".

You can offset the tank bottom reference point to find the delayed radar reflection. Obey the instructions that follow:

- Measure the true tank height with a different measurement method.
- Empty the silo.
- Enter Program mode and go to menu item C.1.2 Tank Height. Push the [>] button.
- Enter the password used at this time for the "Expert" access level. If it is the default password, enter "0058". Push [↵] and then [>].
- Increase the value in menu item C.1.2 Tank Height. This value must be a minimum of 20% more than the true tank height.
- Go to a measurement page in Normal mode that shows the distance. Make a note of the distance of the reflection measured by the device.

➲ This is the delayed radar reflection. The distance shown will be the new tank height.

- Subtract the distance to the reflection from the true silo height.
- Go to menu item C1.11 Tank Bottom Offset (**Program Mode > Full Setup > Install. Parameters > Tank Bottom Offset**).
- Type in the difference you calculated as a negative value.

➲ A negative value will move the reference point above the silo bottom (as given in menu item C.1.2 Tank Height).

- Push [↵], 2 × [▼] and [>] to go to C1.2 Tank Height.
- Type in the distance that was shown in Normal mode.
- Push 4 × [↵] to exit to the "Save Configuration?" window.
- Select **Yes** and push [↵].

➲ The device will go back to Normal mode.

INFORMATION!
For more data on menu items, refer to Function description on page 78 – table C: Full Setup.

6.4.8 How to make a filter to remove radar signal interference

If the device measures level in a silo that contains obstructions (ladder, supports etc.), these objects can cause radar signal interference (parasitic signals). You can use the empty spectrum function (menu A4.2) in the Quick Setup menu to make a filter to remove radar signal interference.

INFORMATION!
We recommend that you do an empty spectrum scan when the silo is empty and all the moving parts are in operation.

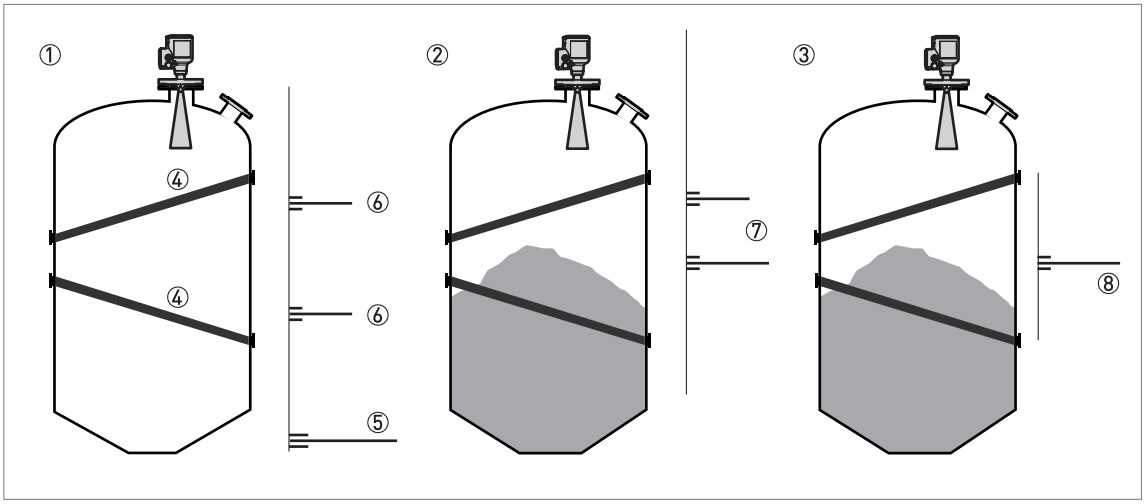

Figure 6-10: How to make a filter to remove radar signal interference

① Empty silo before the device uses the empty spectrum scan (with a graph of reflections shown)
② Partially filled silo before the device uses the empty spectrum scan (with a graph of reflections shown)
③ Partially filled silo after the device uses the empty spectrum scan (with a graph of reflections shown)
④ Support beam location
⑤ Silo bottom signal
⑥ Support beam signals (interference signals) before the device does the empty spectrum scan
⑦ Signal of the solid before the device does the empty spectrum scan
⑧ Reflected signal if the device uses the data from the empty spectrum scan. The device only uses the reflection on the surface of the solid to measure distance.

- After you enter Program mode, set the access level to "Expert". For more data about the procedure, refer to *Protection of the device settings (access levels)* on page 66.
- Push [▼], [>], [▼] and [>] to go to the menu item A4.2 Empty Spectrum.
- Push [>] to start the empty spectrum recording procedure. For more data, refer to *Empty spectrum recording* on page 101. Push [↵] at the end of each step of the procedure to continue to the next step.

INFORMATION!
For more data on empty spectrum scans, refer to Function description on page 78 – table A. Quick Setup menu (menu item A4.2).

6.5 Status messages and diagnostic data

Device status and error messages are shown on a device status page in Normal mode and in menu item "C7.3.1 Messages View" in Program mode. Messages shown agree with NAMUR Guidelines NE 107. The error messages for the device are divided into status groups, each with one status signal. There are 16 status groups with fixed status signals and 8 groups with status signals that can be changed. The status groups are also divided into 4 groups: Sensor, Electronics, Configuration and Process.

Each status message (or status signal) has a special symbol which agrees with the NAMUR Guidelines. This symbol is shown with the message.

INFORMATION!
The status group name and the status signal (F/S/M/C) are shown. For more data, refer to the table that follows.

Status messages (NAMUR NE 107)

Symbol	Letter	Message	Description and effect
	F	Failure	No measurement is possible.
	S	Out of specification	Measurements are available but they are not sufficiently accurate. Do a check.
	M	Maintenance required	Measurements continue to be accurate but this could change after a short time.
	C	Function check	A test function is on. The value shown does not agree with the correct measured value.
	I	Information	This status message does not have an effect on device measurements.

Normal mode: device status symbol

If the device status changes, the device shows a status symbol in the top left corner of the display screen in Normal mode:

Figure 6-11: Device status: Normal mode

① Device status symbol (NAMUR NE 107)

Normal mode: device status messages

There is also a device status page in Normal mode. This page shows a list of short status messages and gives the status of the device at this time. Push the [▲] or [▼] button to get to the status device status page in Normal mode.

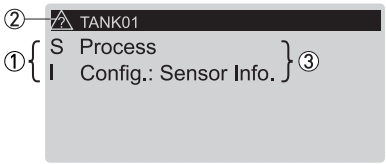

Figure 6-12: Device status: Normal mode – device status page

① Device status letter. Refer to the "Status messages" table at the start of this section.
② Device status symbol (NAMUR NE 107)
③ Short message about device status. For more data, refer to menu item "C7.3.1 Messages View" in Program mode.

Program mode: device status messages

Device status and error messages are shown in menu item "C7.3.1 Messages View" in Program mode. The top level of this menu item shows a list of short status messages.

Push the [▲] or [▼] button to make a selection from the list of status messages.

Figure 6-13: Device status and error messages (C7.3.1 Message View)

① Device status letter code (NAMUR NE 107). In this example, M = Maintenance required.
② Device status symbol (NAMUR NE 107)
③ Error message

Then push the [>] button to show more data.

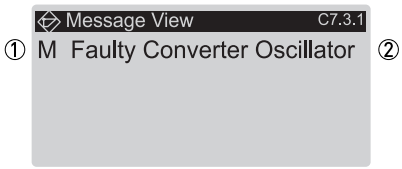

Figure 6-14: Description of the error (C7.3.1 Message View)

① Device status letter code (NAMUR NE 107). In this example, M = Maintenance required.
② Description of error

If the device shows an error message, refer to the table that follows for more data and to find a solution to a problem.

Description of errors and corrective actions

Status type	Error message	Description	Corrective action
F	**Sensor**		
	Corrupt Sensor Parameter	The sensor memory is bad.	De-energize and then energize the device again. If the message is shown again, tell the supplier.
	No Signal	There is no signal from the antenna or the antenna signal is too weak for a long time.	Do a check of the device installation. For more data about installation, refer to the handbook. If the message is shown again, tell the supplier.
	Microwave Tuning Voltage Error	A microwave error occurred.	De-energize and then energize the device again. If the message is shown again, tell the supplier.
	Sensor Comm. Error	Internal bus communication error or hardware failure.	
	No measurement value	The converter receives no measurement data for a long time.	Do a check of the device installation. For more data about installation, refer to the handbook. If the message is shown again, tell the supplier.
F	**Electronics**		
	Fatal Converter Error (DM) ①	An electronics or hardware failure occurred.	De-energize and then energize the device again. If the message is shown again, tell the supplier.
	Fatal Converter Error (CO) ②	An electronics or hardware failure occurred.	
	Fatal Converter Error (Generic)	An electronics or hardware failure occurred.	
	CO Safety Reaction ③	Current Output Safety Reaction. This error message is shown if the current output is less than 3.6 mA or more than 21 mA.	Do a check for other error messages.
	Internal Comm. Error	Internal bus communication error.	De-energize and then energize the device again. If the message is shown again, tell the supplier.
	Power Supply Error	Internal voltage is too low to energize the sensor.	Check the electrical connections to the power supply connection or replace the converter.
		Internal voltage is too high.	
	Sensor/Conv. FW Mismatch	The sensor firmware version does not agree with the converter firmware version. This can be caused by a bad firmware update.	De-energize and then energize the device again. If the message is shown again, tell the supplier.
	Max. Number of Restarts	The device could not start the measuring mode after a given number of times that the device was de-energized and then energized again.	Do a check of the power supply.
	Inconsistent Parameters	Internal bus communication error.	De-energize and then energize the device again. If the message is shown again, tell the supplier.
	Sensor Comm. Error	Internal bus communication error or hardware failure.	

Status type	Error message	Description	Corrective action
F	**Configuration**		
	Inconsistent NVRAM	Incorrect data in the parameter memory.	De-energize and then energize the device again. If the message is shown again, tell the supplier.
	Incons. Converter Calib.	Incorrect calibration data in the converter module.	Tell the supplier.
	Incons. Sensor Calibration	Incorrect calibration data in the sensor module.	
	NVRAMs Mismatch	The serial number of the display screen does not agree with the serial number of the electronics module.	Make sure that the display screen agrees with the electronic module. Go to **Full Setup** > **Device** > **Information** and record the data in menu items **C7.1.5 Electronic Revision** and **C7.1.6 Software Revision**. If it is necessary, tell the supplier.
	Conv. NVRAM Layout Error	Incorrect data in the parameter memory.	De-energize and then energize the device again. If the message is shown again, tell the supplier.
	Disp. NVRAM Layout Error	Incorrect data after an update of the firmware.	
	CO Float Error ②	The device cannot use the measurement data because the device settings are incorrect.	You must make the device go back to its factory settings. Enter Program mode. Set the device to the "Expert" access level. Go to **Full Setup** > **Device** > **Factory Default** > **Reset to Factory Default?** and set this menu item to "Yes". Then go back to Normal mode and set the "Save Configuration?" page to "Yes". De-energize and then energize the device again. If the message is shown again, tell the supplier.
C	**Electronics**		
	FW Update	A firmware update of the converter module continues.	Wait for the firmware update to finish.

Status type	Error message	Description	Corrective action
C	**Configuration**		
	Sensor Sim. Active	The device simulates a measurement value that is set in menu item **B1.1 Set Value**. This measurement value can be a level, distance or reflection value. If you made a strapping table, the device can also simulate a volume or mass value.	Push "Enter" to stop the test.
	Current Out. Sim. Active	The device simulates a current output value that is set in menu item **B1.2 Output**. The current output test range is 3.6...21.5 mA.	Push "Enter" to stop the test.
	HART Sim. Active	The device simulates a measurement value. You can use the HART® interface of the device to simulate a measurement value.	Use the HART® interface to stop the test.
	LCO Simulation Active	The device simulates a current output value set in sub-menu B1 Simulation (distance, level, ullage volume, ullage mass, linearized distance, volume, mass or linearized level).	Push "Enter" to stop the test.
	SysMon Simulation Active	The system monitor sets the device to a simulated current output value.	Restart the device.
S	**Sensor**		
	Sensor Voltage Low	The voltage supplied to the sensor is too low.	Do a check of the power supply.
	Strong Signal	The signal amplitude is too large. It is possible that the signal is saturated.	Make sure that the device installation agrees with the data in the handbook. If the message is shown again, tell the supplier.
	Peak Lost (Level Lost)	No signal peak was found in the Search Window for a long time (>20 s).	Make sure that the device installation agrees with the data in the handbook. The antenna must be in the correct position and not installed above objects in the silo. If it is necessary, change the device settings and do a new empty spectrum recording. If the message is shown again, tell the supplier.
	Overfill	The signal peak is in the blocking distance (refer to menu item C1.5 Blocking Distance). There is a risk that the silo is too full.	Make sure that the device settings are correct and the process conditions are in the specified limits.
	Elec. Temp. Out Of Spec.	The temperature of the sensor is not in the specified limits.	Make sure that the device is operated in the permitted ambient temperature range.
S	**Electronics**		
	Elec. Temp. Out Of Spec.	The temperature of the converter is not in the specified limits.	Make sure that the device is operated in the permitted ambient temperature range.

Status type	Error message	Description	Corrective action
S	**Process**		
	CO Saturated Low ②	The measurement value is less than the minimum value of the current output range. The current output cannot go lower than its minimum value and thus does not agree with the correct measurement value.	Do a check of the process conditions and the minimum current output value.
	CO Saturated High ②	The measurement value is more than the maximum value of the current output range. The current output cannot go higher than its maximum value and thus does not agree with the correct measurement value.	Do a check of the process conditions and the maximum current output value.
M	**Sensor**		
	Weak Signal	The signal amplitude is too small.	Make sure that the device installation agrees with the data in the handbook. If the message is shown again, it is possible that a different antenna must be installed. tell the supplier.
	Bad Measurement Quality (Old Measurement)	The measurement value is incorrect and does not change for more than 10 s.	Make sure that the device installation agrees with the data in the handbook. If the message is shown again, tell the supplier.
	Empty Spectrum invalid	The empty spectrum recording does not agree with the process conditions at this time (e.g. the tank height was changed).	Do a new empty spectrum recording.

Status type	Error message	Description	Corrective action
M	Sensor Information		
	Failed Sensor MCU Test	The sensor electronics does a continuous self-test procedure. The test finds a fault.	De-energize and then energize the device again. If the message is shown again, tell the supplier.
	Failed Sensor Input Test		
	Bad Spectrum Quality	There is a large change in signal strength.	Make sure that the device installation agrees with the data in the handbook. If the message is shown again, we recommend that you attach a larger antenna to the device.
	Peak Lost in Tank Bottom	The signal was lost near the tank bottom. Spherical or conical tanks can cause the device to show this status message.	The device will measure the level of tank contents if you fill the tank. If the message is shown, tell the supplier.
	RC-Oscillator out of bounds	The sensor electronics does a continuous self-test procedure. The test finds a fault.	De-energize and then energize the device again. If the message is shown again, tell the supplier.
	Sensor Reference out of range		
	XCO out of bounds		
	Microwave Lock Error		
	Microwave Sweep Duration Error		
	Microwave Supply Voltage Error		

① DM = data manager
② CO = current output
③ This error message is shown if the device is in SIL mode. CO = current output.

7.1 Periodic maintenance

7.1.1 General notes

In normal operational conditions, no maintenance is necessary. If it is necessary, maintenance must be done by approved personnel (the manufacturer or personnel approved by the manufacturer).

INFORMATION!
For more data about regular inspections and maintenance procedures for devices with Ex and other approvals, refer to the related supplementary instructions.

You must remove the device for cleaning only if the antenna does not have the purging system option. If it is necessary to clean the device, obey the instructions given in the handbook.

7.1.2 Maintenance of the O-rings for the housing covers

If the display cover ① or the terminal compartment cover ② of the housing is opened and closed, make sure that the O-rings are correctly greased or, if it is necessary, replaced. For more data about the replacement of the O-rings, refer to *Spare parts* on page 167.

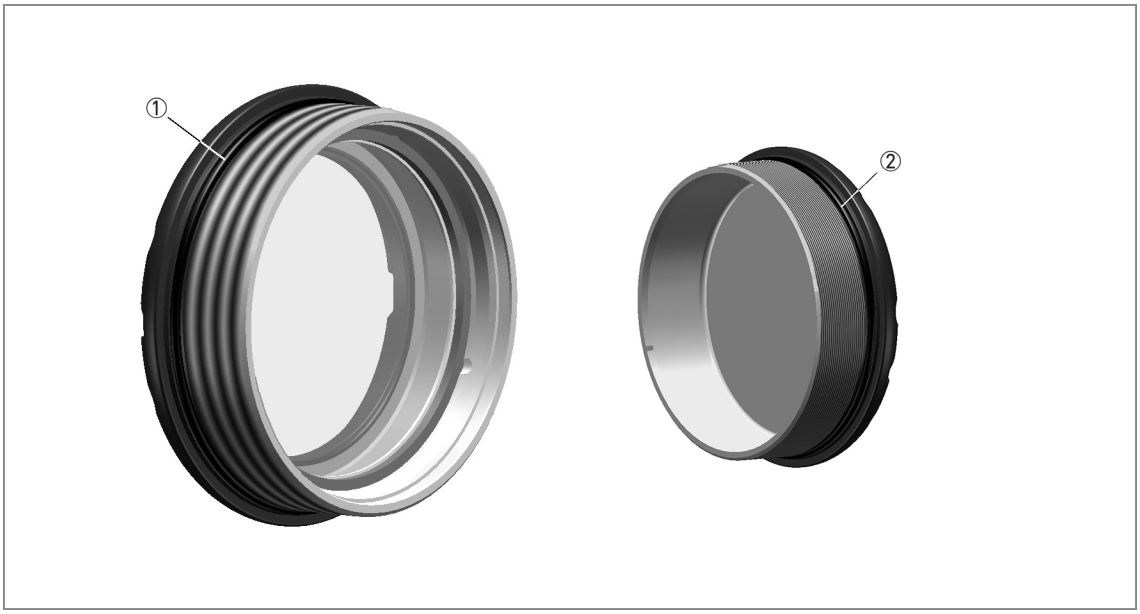

Figure 7-1: Maintenance of the O-rings

① Display cover
② Terminal compartment cover

CAUTION!
Use multi-purpose grease that is applicable for the operating temperature range of the O-ring with the properties that follow:

- *Operating temperature range of -40...+130°C / -40...+266°F without a negative effect on the lubrication of the O-ring*
- *Without silicone*
- *The bonding properties must be satisfactory*
- *Lithium-saponified*
- *Water-resistant*
- *Agrees with the O-ring material*

7.1.3 How to clean the top surface of the device

WARNING!
Do not let more than 5 mm / 0.2" of dust collect on the top surface of the device. This is a possible source of ignition in a potentially explosive atmosphere.

DANGER!
Risk of electrostatic discharge from the gray plastic sun cover.

Obey these instructions:

- Keep the thread of the terminal compartment cover clean.
- If dirt collects on the device, clean it. Wipe the plastic sun cover with a damp cloth.

7.1.4 How to clean horn antennas under process conditions

If it is possible that there will be build-up or condensation, purging options are available for Metallic Horn antennas. Purge the antenna at intervals to make sure that the inner surface of the antenna stays clean and the device measures accurately. For more data about dimensions, refer to *Dimensions and weights* on page 139 (Purging option).

WARNING!
Purge the antenna with a dry gas that is applicable to the process.

CAUTION!
Purge the antenna at intervals to make sure that the inner surface of the antenna stays clean and the device measures accurately.

For more data, refer to the table that follows:

How to use the purge

Process conditions	How to use the purge
The device is colder than other elements in the process. It is possible that there will be condensation in the antenna.	Continuous use. Use low-pressure gas to remove condensation from the antenna.
There is a risk of build-up in the antenna	Purge at intervals. Use compressed air, nitrogen or another gas that is applicable to the process up to 6 bar / 87 psi.
There is a build-up or risk of build-up in the antenna	Purge at intervals. Use a liquid (hot water, solvent or another liquid that is applicable to the process) to melt the liquid that has crystallized in the antenna.

7.2 Service warranty

WARNING!
Only approved personnel can do an inspection of the device and repairs. If you find a problem, send the device back to your supplier for inspection and/or repairs.

Servicing by the customer is limited by warranty to:

- The removal and installation of the device.
- **Replacement of signal converters of other radar devices:** The removal of OPTIWAVE 6300 signal converter and installation of the OPTIWAVE 6400 signal converter. For the procedure, refer to *Replacement of the OPTIWAVE 6300 signal converter with the OPTIWAVE 6400 signal converter* on page 122.

For more data on how to prepare the device before you send it back, refer to *Returning the device to the manufacturer* on page 125.

7.3 Replacement of the OPTIWAVE 6300 signal converter with the OPTIWAVE 6400 signal converter

INFORMATION!
Complete the 4 procedures that follow in numerical sequence.

Equipment needed

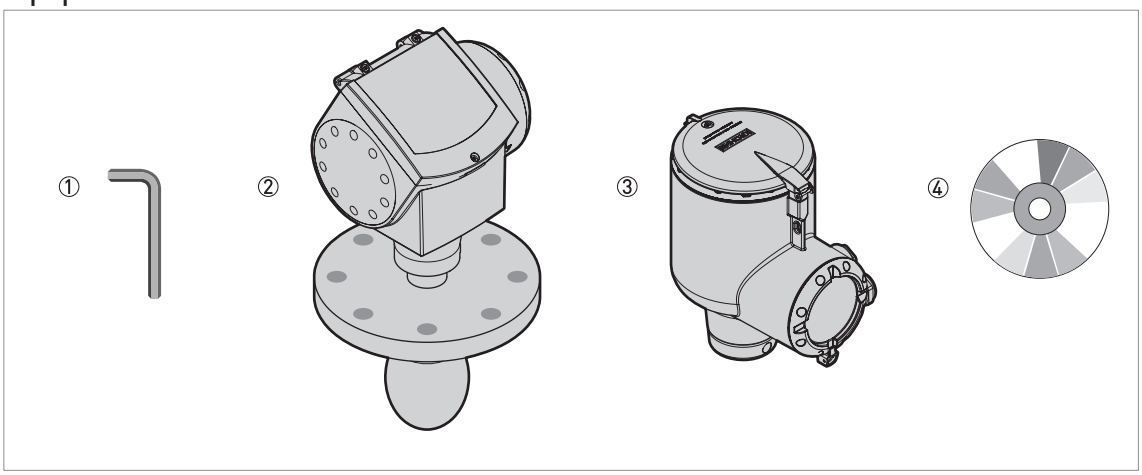

Figure 7-2: Equipment needed

① 5 mm Allen wrench (not supplied)
② OPTIWAVE 6300 radar level transmitter
③ OPTIWAVE 6400 signal converter (without process connection and antenna). It is necessary to send an order for the OPTIWAVE 6400 signal converter with an adaptor for the OPTIWAVE 6300 process connection attached. For the spare parts order code, refer to *Spare parts* on page 167 (Table: Replacement signal converter for mechanical sub-assembly of the OPTIWAVE 6300 C).
④ Handbooks for all devices. You can download this document free of charge from the website (Download Center).

CAUTION!
OPTIWAVE 6300:
Record the OPTIWAVE 6300 serial number on the device nameplate. Send the serial number with your order for the OPTIWAVE 6400 signal converter.
Make sure that you also record the device settings for the OPTIWAVE 6300. This data includes basic configuration (tank height, blocking distance etc.), output, application, display and strapping table data. You can find this data in Supervisor mode.

Procedure 1: Record the device serial number (OPTIWAVE 6300 radar level transmitter) and send the order for the OPTIWAVE 6400 signal converter

- Find the serial number on the OPTIWAVE 6300 nameplate.
- Record this number.
- Create an order code for the OPTIWAVE 6400 signal converter. Make sure that the OPTIWAVE 6400 signal converter has the adaptor option for the OPTIWAVE 6300 flange system.

Procedure 2: How to remove the signal converter (OPTIWAVE 6300 radar level transmitter)

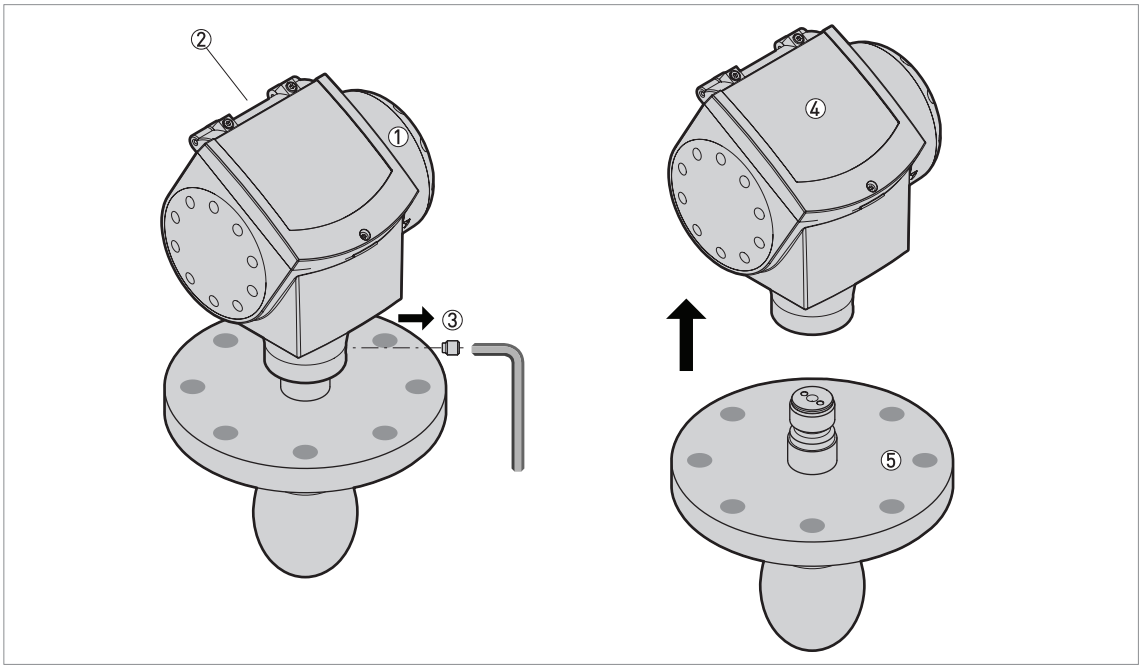

Figure 7-3: Procedure 2: How to remove the signal converter (OPTIWAVE 6300 radar level transmitter)

① Terminal compartment
② Cable glands
③ Lock screw
④ Signal converter
⑤ Process connection

INFORMATION!
For more data about electrical connection procedures, refer to Electrical installation: output options with cable gland on page 47.

- De-energize the OPTIWAVE 6300.
- Remove the terminal compartment cover and loosen the cable glands.
- Disconnect the electrical wires from the terminals. Remove the wires from the terminal compartment. Attach the terminal compartment cover.
- Loosen the lock screw at the bottom of the signal converter with a 5 mm Allen wrench.
- Remove the signal converter from the process connection.

Procedure 3: How to attach the OPTIWAVE 6400 signal converter

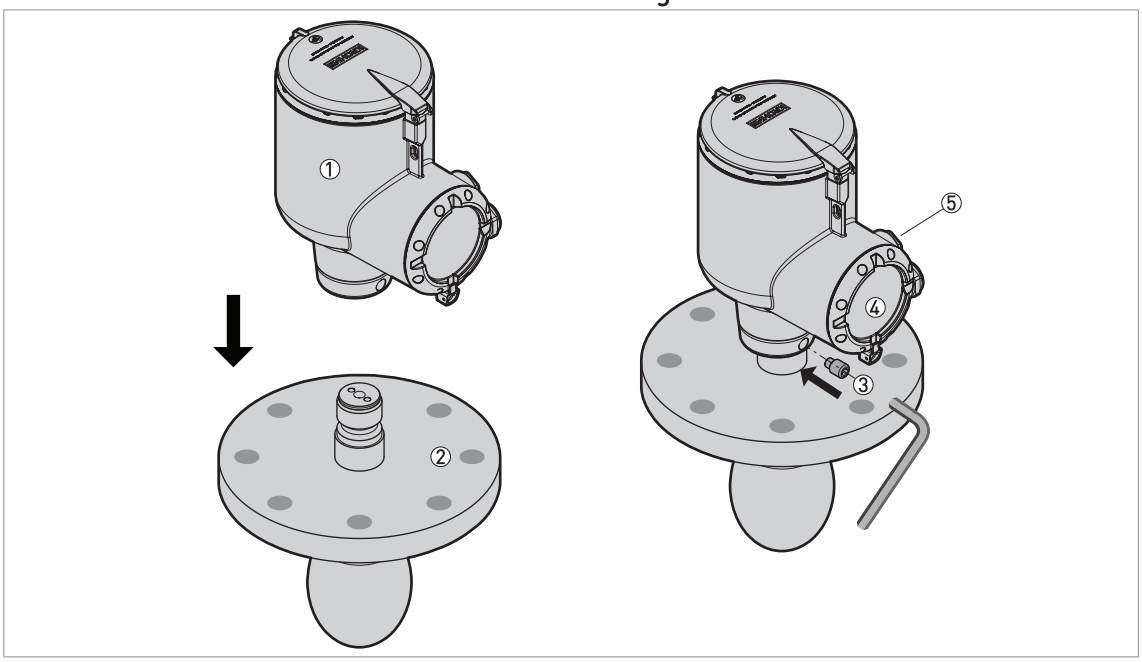

Figure 7-4: Procedure 3: How to attach the OPTIWAVE 6400 signal converter

① Signal converter
② Process connection
③ Lock screw
④ Terminal compartment
⑤ Cable glands

INFORMATION!
For more data about electrical connection procedures, refer to Electrical installation: output options with cable gland on page 47.

- Put the OPTIWAVE 6400 signal converter on the OPTIWAVE 6300 flange system. Make sure that the flange system fully engages in the mating part (signal converter).
- Tighten the lock screw at the bottom of the signal converter with a 5 mm Allen wrench.
- Remove the terminal compartment cover and loosen the cable glands.
- Put the electrical wires in the terminal compartment. Connect the electrical wires to the terminals.
- Attach the terminal compartment cover. Tighten the cable glands.

Procedure 4: Device configuration (OPTIWAVE 6400)

- For the Quick Setup procedure refer to *Standard setup* on page 98. For more data about device configuration, refer to *Operation* on page 61.

CAUTION!
You recorded the device settings of the OPTIWAVE 6300 level transmitter before you attached the new signal converter. Make sure that you enter these settings in the Program mode of the OPTIWAVE 6400.

7.4 Spare parts availability

The manufacturer adheres to the basic principle that functionally adequate spare parts for each device or each important accessory part will be kept available for a period of 3 years after delivery of the last production run for the device.

This regulation only applies to spare parts which are subject to wear and tear under normal operating conditions.

7.5 Availability of services

The manufacturer offers a range of services to support the customer after expiration of the warranty. These include repair, maintenance, technical support and training.

INFORMATION!
For more precise information, please contact your local sales office.

7.6 Returning the device to the manufacturer

7.6.1 General information

This device has been carefully manufactured and tested. If installed and operated in accordance with these operating instructions, it will rarely present any problems.

WARNING!
Should you nevertheless need to return a device for inspection or repair, please pay strict attention to the following points:

- *Due to statutory regulations on environmental protection and safeguarding the health and safety of the personnel, the manufacturer may only handle, test and repair returned devices that have been in contact with products without risk to personnel and environment.*
- *This means that the manufacturer can only service this device if it is accompanied by the following certificate (see next section) confirming that the device is safe to handle.*

WARNING!
If the device has been operated with toxic, caustic, radioactive, flammable or water-endangering products, you are kindly requested:

- *to check and ensure, if necessary by rinsing or neutralising, that all cavities are free from such dangerous substances,*
- *to enclose a certificate with the device confirming that it is safe to handle and stating the product used.*

7.6.2 Form (for copying) to accompany a returned device

CAUTION!
To avoid any risk for our service personnel, this form has to be accessible from outside of the packaging with the returned device.

Company:		Address:
Department:		Name:
Tel. no.:		Fax no. and/or Email address:
Manufacturer's order no. or serial no.:		
The device has been operated with the following medium:		
This medium is:		radioactive
		water-hazardous
		toxic
		caustic
		flammable
		We checked that all cavities in the device are free from such substances.
		We have flushed out and neutralized all cavities in the device.
We hereby confirm that there is no risk to persons or the environment through any residual media contained in the device when it is returned.		
Date:		Signature:
Stamp:		

7.7 Disposal

LEGAL NOTICE!
Disposal must be carried out in accordance with legislation applicable in your country.

Separate collection of WEEE (Waste Electrical and Electronic Equipment) in the European Union:

According to the directive 2012/19/EU, the monitoring and control instruments marked with the WEEE symbol and reaching their end-of-life **must not be disposed of with other waste**.
The user must dispose of the WEEE to a designated collection point for the recycling of WEEE or send them back to our local organisation or authorised representative.

8.1 Measuring principle

A radar signal is emitted via an antenna, reflected from the product surface and received after a time t. The radar principle used is FMCW (Frequency Modulated Continuous Wave).

The FMCW-radar transmits a high frequency signal whose frequency increases linearly during the measurement phase (called the frequency sweep). The signal is emitted, reflected on the measuring surface and received with a time delay, t. Delay time, t=2d/c, where d is the distance to the product surface and c is the speed of light in the gas above the product.

For further signal processing the difference Δf is calculated from the actual transmitted frequency and the received frequency. The difference is directly proportional to the distance. A large frequency difference corresponds to a large distance and vice versa. The frequency difference Δf is transformed via a Fast Fourier Transform (FFT) into a frequency spectrum and then the distance is calculated from the spectrum. The level results from the difference between the tank height and the measured distance.

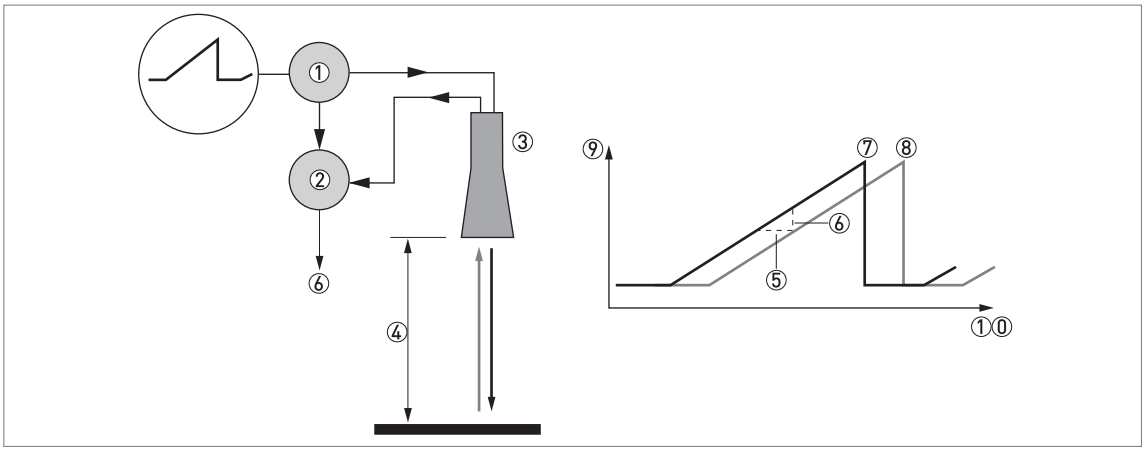

Figure 8-1: Measuring principle of FMCW radar

① Transmitter
② Mixer
③ Antenna
④ Distance to product surface, where change in frequency is proportional to distance
⑤ Differential time delay, Δt
⑥ Differential frequency, Δf
⑦ Frequency transmitted
⑧ Frequency received
⑨ Frequency
①⓪ Time

Measurement modes

"Direct" mode
The device uses the largest radar signal to monitor level.

"Direct Plus" mode
If it is possible there will be an interference signal in the measurement zone that is larger than the level signal, select "Direct Plus" mode. If you select "Direct Plus" mode, the device locks on the level signal and monitors changes in level. If the device then finds larger reflections in the silo, it will only monitor the largest signal in a small search zone around the first reflection found and ignore all other reflections. The interference signal must not be near to the level signal.

CAUTION!
"DIRECT PLUS" MODES
It is important to enter the correct dielectric constant value in menu item C2.2 Epsilon R Product. If this value is incorrect, the device will not measure level accurately.

8.2 Technical data

INFORMATION!

- *The following data is provided for general applications. If you require data that is more relevant to your specific application, please contact us or your local sales office.*
- *Additional information (certificates, special tools, software,...) and complete product documentation can be downloaded free of charge from the website (Downloadcenter).*

Measuring system

Measuring principle	2-wire loop-powered level transmitter; FMCW radar
Frequency range	K-band (24...26 GHz)
Max. radiated power (EIRP)	< -41.3 dBm according to ETSI EN 307 372 (TLPR) and ETSI EN 302 729 (LPR)
Application range	Level measurement of powders and granulates
Primary measured value	Distance and reflection
Secondary measured value	Level, volume and mass

Design

Construction	The measurement system consists of a measuring sensor (antenna) and a signal converter
Options	Integrated LCD display (-20..+70°C / -4…+158°F); if the ambient temperature is not in these limits, then this condition can stop the display
	Straight antenna extensions (length 105 mm / 4.1¨) Max. extension length, Metallic Horn antenna: 1050 mm / 41.3¨ Max. extension length, Drop antenna: 525 mm / 20.7¨
	Antenna purging system for Metallic Horn antennas (supplied with a 1/8 NPTF connection)
	2° slanted PP flange (for all antennas)
	Weather protection
Max. measuring range (antenna)	Metallic Horn, DN80 (3¨): 25 m / 82 ft
	Metallic Horn, DN100 (4¨): 40 m / 131.2 ft
	Metallic Horn, DN150 (6¨): 80 m / 262.5 ft
	Metallic Horn, DN200 (8¨): 100 m / 328 ft
	PP or PTFE Drop, DN80 (3¨): 25 m / 82 ft
	PP or PTFE Drop, DN100 (4¨): 40 m / 131.2 ft
	PP or PTFE Drop, DN150 (6¨): 100 m / 328.1 ft
	Refer also to "Measuring accuracy" on page 135
Min. tank height	1 m / 40¨
Recommended minimum blocking distance	Antenna extension length + antenna length + 0.3 m / 12¨
Min. distance for reflection measurement	1 m / 3.3 ft

Beam angle (antenna)	Metallic Horn, DN 80 (3¨): 9°
	Metallic Horn, DN 100 (4¨): 8°
	Metallic Horn, DN150 / 6¨: 6°
	Metallic Horn, DN200 / 8¨: 5°
	PP Drop, DN80 / 3¨: 9°
	PP Drop, DN100 / 4¨: 7°
	PP Drop, DN150 / 6¨: 5°
	PTFE Drop, DN80 / 3¨: 8°
	PTFE Drop, DN100 / 4¨: 7°
	PTFE Drop, DN150 / 6¨: 4°
Display and user interface	
Display	Backlit LCD display
	128 × 64 pixels in 64-step greyscale with 4-button keypad
Interface languages	English, French, German, Italian, Spanish, Portuguese, Chinese (simplified), Japanese, Russian, Czech, Polish and Turkish

Measuring accuracy

Resolution	1 mm / 0.04¨
Repeatability	±1 mm / ±0.04¨
Accuracy	Standard: ±2 mm / ±0.08¨, when distance ≤ 10 m / 33 ft; ±0.02% of measured distance, when distance > 10 m / 33 ft. For more data, refer to *Measuring accuracy* on page 135.
Reference conditions acc. to EN 61298-1	
Temperature	+15...+25°C / +59...+77°F
Pressure	1013 mbara ±50 mbar / 14.69 psia ±0.73 psi
Relative air humidity	60% ±15%
Target	Metal plate in an anechoic chamber. The device has specified settings.

Operating conditions

Temperature	
Ambient temperature	-40…+80°C / -40…+176°F Ex: see supplementary operating instructions or approval certificates
Relative humidity	0...99%
Storage temperature	-40…+85°C / -40…+185°F
Process connection temperature (higher temperature on request)	**Metallic Horn antenna:** -50…+130°C / -58…+266°F (the process connection temperature must agree with the temperature limits of the gasket material. Refer to "Materials" in this table.) Ex: see supplementary operating instructions or approval certificates
	Drop antenna (PTFE): -50…+130°C / -58…+266°F (the process connection temperature must agree with the temperature limits of the gasket material. Refer to "Materials" in this table.) Ex: see supplementary operating instructions or approval certificates
	Drop antenna (PP): -40…+100°C / -40…+212°F (the process connection temperature must agree with the temperature limits of the gasket material. Refer to "Materials" in this table.) Ex: see supplementary operating instructions or approval certificates
Pressure	
Process pressure	-1…16 barg / -14.5…232 psig
	Subject to the process connection used and the process connection temperature. For more data, refer to *Guidelines for maximum operating pressure* on page 137.

Other conditions	
Dielectric constant (ε_r)	≥1.4
Ingress protection	IEC 60529: IP66 / IP68 (0.1 barg / 1.45 psig)
	NEMA 250: NEMA type 4X - 6 (housing) and type 6P (antenna)
Maximum rate of change	60 m/min / 196 ft/min

Installation conditions

Process connection size	The nominal diameter (DN) should be equal to or larger than the antenna diameter.
	If the nominal diameter (DN) is smaller than the antenna, either: – provide the means to adapt the device to a larger process connection on the tank (for example, a plate with a slot), or – use the same process connection, but remove the antenna from the device before installation and fit it from inside the tank.
Process connection position	Make sure that there are not any obstructions directly below the process connection for the device. For more data, refer to *Installation* on page 22.
Dimensions and weights	For dimensions and weights data, refer to *Dimensions and weights* on page 139.

Materials

Housing	Polyester-coated aluminium
	Option: Stainless steel (1.4404 / 316L) – non-Ex devices only. Ex approvals will be available in the second quarter of 2018.
Wetted parts, including antenna	Metallic Horn antenna: Stainless steel (1.4404 / 316L)
	Drop antenna: PTFE; PP
Process connection	Stainless steel (1.4404 / 316L)
Gaskets (and O-rings for the sealed antenna extension option)	**PTFE Drop antenna:** FKM/FPM (-40…+130°C / -40…+266°F); Kalrez® 6375 (-20…+130°C / -4…+266°F); EPDM (-50°C…+130°C / -58…+266°F) ①
	PP Drop antenna: FKM/FPM (-40…+100°C / -40…+212°F); Kalrez® 6375 (-20…+100°C / -4…+212°F); EPDM (-40°C…+100°C / -40…+212°F) ①
	Metallic Horn antenna: FKM/FPM (-40…+130°C / -40…+266°F); Kalrez® 6375 (-20…+130°C / -4…+266°F); EPDM (-50°C…+130°C / -58…+266°F)
Feedthrough	PEI (-50...+130°C / -58...+266°F) This is the maximum range. The feedthrough temperature limits must agree with the temperature limits of the gasket material and antenna type.
Cable gland	Standard: none
	Options: Plastic (Non-Ex: black, Ex i-approved: blue); nickel-plated brass; stainless steel; M12 (4-pin connector)
Weather protection (Option)	Stainless steel (1.4404 / 316L)

Process connections

Thread	G 1 A...1½ A (ISO 228); 1...1½ NPT (ASME B1.20.1)
Flange version	
EN 1092-1	Low-pressure flanges: DN80...200 in PN01; Standard flanges: DN80...200 in PN10, PN16 and PN40 (Type B1); others on request Optional flange facing for standard flanges: Type A
ASME B16.5	Low-pressure flanges: 3"...8" in 150 lb (max. 15 psig); Standard flanges: 3"…8" in 150 lb RF and 300 lb RF; others on request Optional flange facing for standard flanges: FF (Flat Face)
JIS B2220	80…200A in 10K RF; others on request
Other	Others on request

Electrical connections

Power supply	**Terminals output – Non-Ex / Ex i:** 12…30 V DC; min./max. value for an output of 21.5 mA at the terminals
	Terminals output – Ex d: 16…36 V DC; min./max. value for an output of 21.5 mA at the terminals
Maximum current	21.5 mA
Current output load	**Non-Ex / Ex i:** R_L [Ω] ≤ ((U_{ext} -12 V)/21.5 mA). For more data, refer to *Minimum power supply voltage* on page 136.
	Ex d: R_L [Ω] ≤ ((U_{ext} -16 V)/21.5 mA). For more data, refer to *Minimum power supply voltage* on page 136.
Cable entry	Standard: M20×1.5; Options: ½ NPT; 4-pin male M12 connector
Cable gland	Standard: none
	Options: M20×1.5 (cable diameter: 7…12 mm / 0.28…0.47¨); others are available on request
Cable entry capacity (terminal)	0.5…3.31 mm² (AWG 20...12)

Input and output

Current output	
Output signal	Standard: 4…20 mA
	Options: 3.8…20.5 mA acc. to NAMUR NE 43; 4…20 mA (reversed); 3.8…20.5 mA (reversed) acc. to NAMUR NE 43
Output type	Passive
Resolution	±5 µA
Temperature drift	Typically 50 ppm/K
Error signal	High: 21.5 mA; Low: 3.5 mA acc. to NAMUR NE 43
HART®	
Description	Digital signal transmitted with the current output signal (HART® protocol) ②
Version	7.4
Load	≥ 250 Ω
Digital temperature drift	Max. ±15 mm / 0.6¨ for the full temperature range
Multi-drop operation	Yes. Current output = 4 mA. Enter Program mode to change the polling address (1...63).
Available drivers	FC475, AMS, PDM, FDT/DTM
PROFIBUS PA (pending)	
Type	PROFIBUS MBP interface that agrees with IEC 61158-2 with 31.25 kbit/s; voltage mode (MBP = Manchester-Coded, Bus-Powered)
Function blocks	1 × Transducer Block Level (TB-Level), 1 × Physical Block (PB), 4 × Analog Input Block (AI), 1 × Totalizer Function Block (TOT)
Device power supply	9...32 V DC – bus powered; no additional power supply required
Polarity sensitivity	No
Basic current	18 mA
FOUNDATION™ fieldbus (pending)	
Physical layer	FOUNDATION™ fieldbus protocol that agrees with IEC 61158-2 and FISCO model; galvanically isolated
Communication standard	H1
ITK version	6.3

Function blocks	1 × Enhanced Resource Block (RB), 1 × Customer Level Transducer Block (LEVELTB), 1 × Customer Converter Transducer Block (CONVTB), 1 × Customer Diagnosis Transducer Block (DIAGTB), 4 × Analog Input Block (AI), 1 × Digital Input (DI), 1 × Integrator Block (IT), 1 × Proportional Integral Derivate Block (PID), 1 × Arithmetic Block (AR)
	Analog Input Block: 10 ms
	Digital Input Block: 20 ms
	Integrator Block: 15 ms
	Proportional Integral Derivate Block: 25 ms
Device power supply	Not intrinsically safe: 9...32 V DC
	Intrinsically safe: 9...24 V DC
Basic current	18 mA
Maximum error current FDE	25.5 mA (= basic current + error current = 18 mA + 7.5 mA)
Polarity sensitivity	No
Minimum cycle time	250 ms
Output data	Level, distance, volume, ullage volume, mass, ullage mass
Input data	None
Link Active Scheduler	Supported
NAMUR NE 107 data	Supported with FF field diagnosis (FF-891)

Approvals and certification

CE	The device meets the essential requirements of the EU Directives. The manufacturer certifies successful testing of the product by applying the CE marking.
	For more data about the EU Directives and European Standards related to this device, refer to the EU Declaration of Conformity. You can download this document free of charge from the website (Download Center).
Vibration resistance	EN 60068-2-6 and EN 60721-3-4 (1...9 Hz: 3 mm / 10...200 Hz:1g, 10g shock ½ sinus: 11 ms)
Explosion protection	
ATEX (EU Type Approval)	II 1/2 G Ex ia IIC T6...T* Ga/Gb; ③
	II 1/2 D Ex ia IIIC T85°C...T*°C Da/Db; ④
	II 1/2 G Ex db ia IIC T6...T* Ga/Gb; ③
	II 1/2 D Ex ia tb IIIC T85°C...T*°C Da/Db ④
ATEX (Type Approval)	II 3 G Ex ic IIC T6...T* Gc; ③
	II 3 D Ex ic IIIC T85°C...T*°C Dc ④
IECEx	Ex ia IIC T6...T* Ga/Gb; ③
	Ex ia IIIC T85°C...T*°C Da/Db; ④
	Ex db ia IIC T6...T* Ga/Gb; ③
	Ex ia tb IIIC T85°C...T*°C Da/Db; ④
	Ex ic IIC T6...T* Gc; ③
	Ex ic IIIC T85°C...T*°C Gc ④

cQPSus	**Division ratings**
	XP-IS, Class I, Div 1, GPS ABCD, T6...Tx;
	DIP, Class II, III, Div 1, GPS EFG, T85°C...T*°C ; ④
	IS, Class I, Div 1, GPS ABCD, T6...Tx;
	IS, Class II, III, Div 1, GPS EFG, T85°C...T*°C; ④
	NI, Class I, Div 2, GPS ABCD, T6...Tx;
	NI, Class II, III, Div 2, GPS FG, T85°C...T*°C ④
	Zone ratings
	Class I, Zone 1, AEx db ia [ia Ga] IIC T6...T* Gb (US) – antenna suitable for Zone 0; Ex db ia [ia Ga] IIC T6...T* Gb (Canada) – antenna suitable for Zone 0; ③
	Class I, Zone 0, AEx ia IIC T6...T* Ga (US); Ex ia IIC T6...T* Ga (Canada); ③
	Zone 20, AEx ia IIIC T85°C...T*°C Da (US); Ex ia IIIC T85°C...T*°C Da (Canada); ④
	Zone 21, AEx ia tb [ia Da] IIIC T85°C...T*°C Db (US) – antenna suitable for Zone 20 Ex ia tb [ia Da] IIIC T85°C...T*°C Db (Canada) – antenna suitable for zone 20 ④
NEPSI	Ex ia IIC T*~T6 Ga/Gb; ③
	Ex d ia IIC T*~T6 Ga/Gb; ③
	Ex iaD 20/21 T85...T* IP6X; ⑤
	Ex iaD 20/21 tD A21 IP6X T85°C...T*°C ④
EAC-EX	Ga/Gb Ex ia IIC T6...T* X; ③
	Da/Db Ex ia IIIC T85°C...T*°C X; ④
	Ga/Gb Ex db ia IIC T6...T* X; ③
	Da/Db Ex ia tb IIIC T85°C...T*°C X ④
Other standards and approvals	
Electromagnetic compatibility	**EU**: Electromagnetic Compatibility directive (EMC)
Radio approvals	**EU**: Radio Equipment directive (RED)
	FCC Rules: Part 15
	Industry Canada: RSS-211
Electrical safety	**EU**: Agrees with the safety part of the Low Voltage directive (LVD)
	USA and Canada: Agrees with NEC and CEC requirements for installation in ordinary locations
NAMUR	NAMUR NE 21 Electromagnetic Compatibility (EMC) of Industrial Process and Laboratory Control Equipment
	NAMUR NE 43 Standardization of the Signal Level for the Failure Information of Digital Transmitters
	NAMUR NE 53 Software and Hardware of Field Devices and Signal Processing Devices with Digital Electronics
	NAMUR NE 107 Self-Monitoring and Diagnosis of Field Devices
CRN	Pending. This certification is applicable for all Canadian provinces and territories. For more data, refer to the website.
Construction code	Option: ASME B31.3

① Kalrez® is a registered trademark of DuPont Performance Elastomers L.L.C.
② HART® is a registered trademark of the HART Communication Foundation
③ T* = T5 or T4. For more data, refer to the related Ex approval certificate.
④ T*°C = 100°C or 130°C. For more data, refer to the related Ex approval certificate.
⑤ T* = 100°C or 130°C. For more data, refer to the related Ex approval certificate.

8.3 Measuring accuracy

Use these graphs to find the measuring accuracy for a given distance from the transmitter.

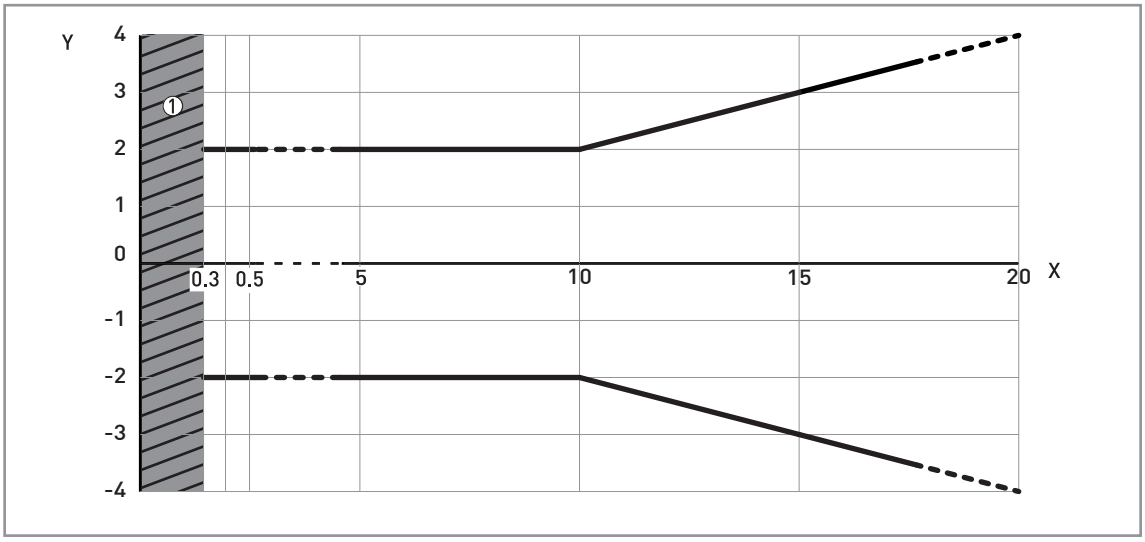

Figure 8-2: Measuring accuracy (graph of measuring accuracy in mm against measuring distance in m)

X: Measuring distance from the thread stop or flange facing of the process connection [m]
Y: Measuring accuracy [+yy mm / -yy mm]
① Minimum recommended blocking distance = antenna extension length + antenna length + 300 mm

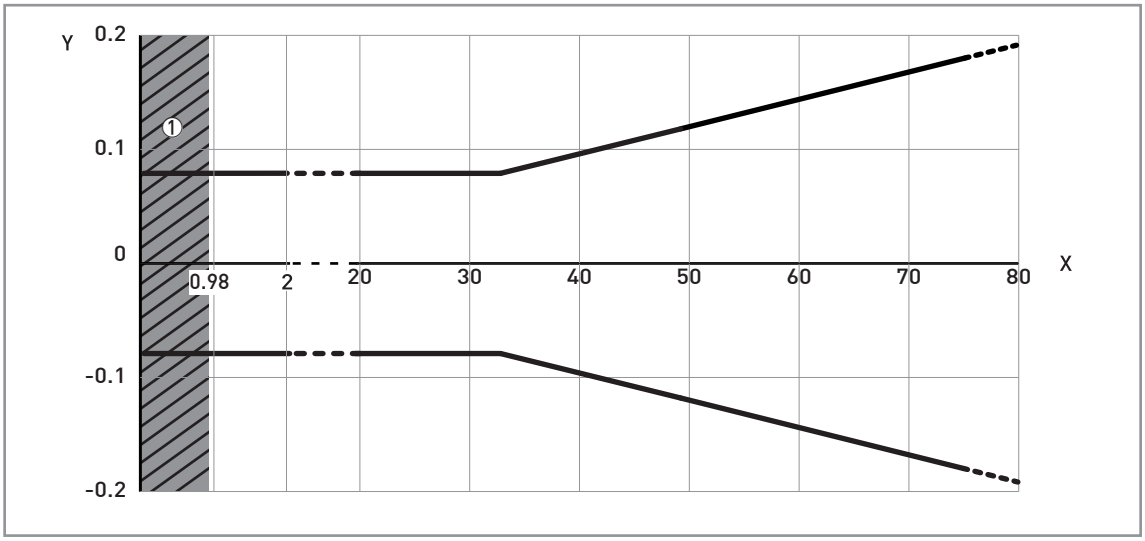

Figure 8-3: Measuring accuracy (graph of measuring accuracy in inches against measuring distance in ft)

X: Measuring distance from the thread stop or flange facing of the process connection [ft]
Y: Measuring accuracy [+yy inches / -yy inches]
① Minimum recommended blocking distance = antenna extension length + antenna length + 11.81¨

INFORMATION!
To calculate the accuracy at a given distance from the antenna, refer to Technical data on page 129 (measuring accuracy).

8.4 Minimum power supply voltage

Use these graphs to find the minimum power supply voltage for a given current output load.

Non-Ex and Hazardous Location approved (Ex i / IS) devices

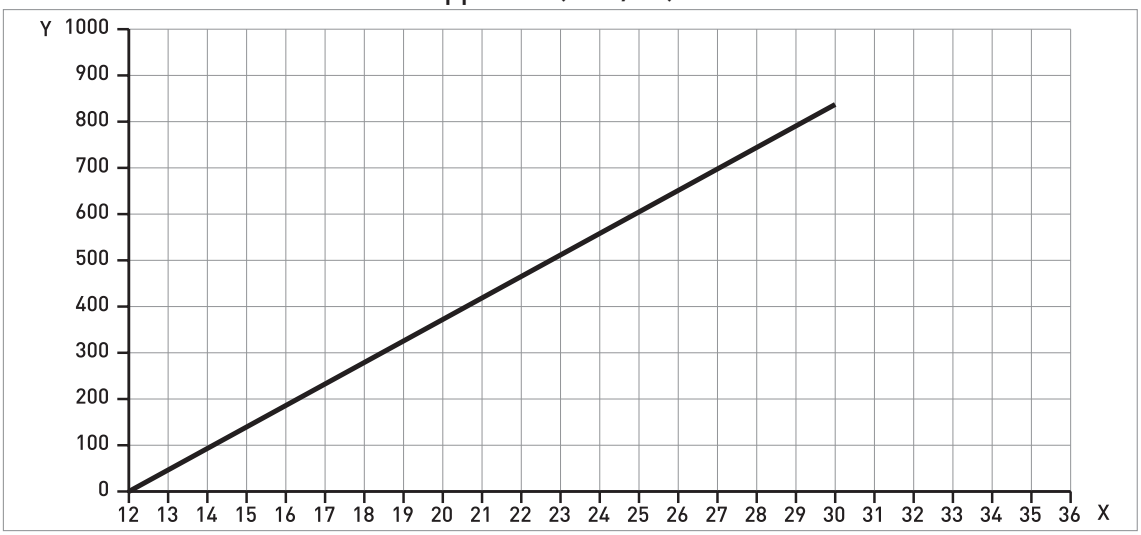

Figure 8-4: Minimum power supply voltage for an output of 21.5 mA at the terminals (Non-Ex and Hazardous Location approval (Ex i / IS))

X: Power supply U [V DC]
Y: Current output load R_L [Ω]

Hazardous Location (Ex d / XP/NI) approved devices

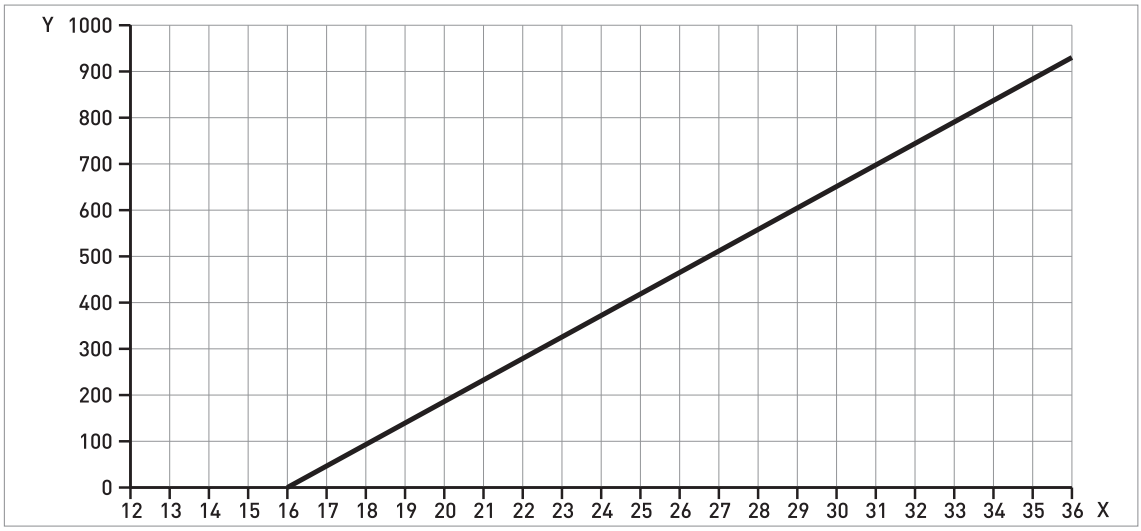

Figure 8-5: Minimum power supply voltage for an output of 21.5 mA at the terminals (Hazardous Location approval (Ex d / XP/NI))

X: Power supply U [V DC]
Y: Current output load R_L [Ω]

8.5 Guidelines for maximum operating pressure

WARNING!
Make sure that the devices are used within their operating limits.

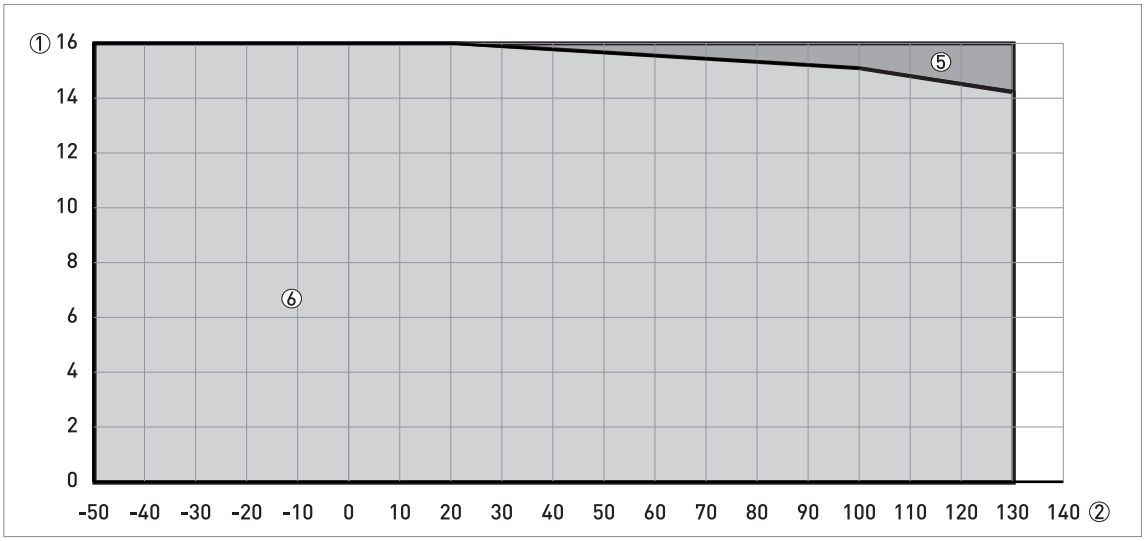

Figure 8-6: Pressure / temperature de-rating (EN 1092-1), flange and threaded connection, in °C and barg

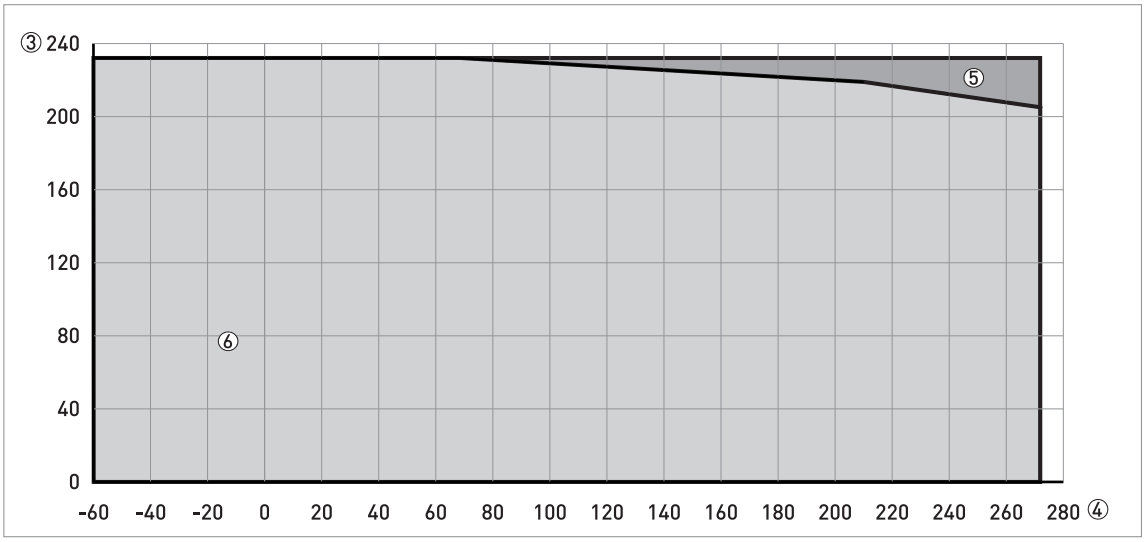

Figure 8-7: Pressure / temperature de-rating (EN 1092-1), flange and threaded connections, in °F and psig

① Process pressure, p [barg]
② Process connection temperature, T [°C]
③ Process pressure, p [psig]
④ Process connection temperature, T [°F]
⑤ Threaded connection, G (ISO 228-1)
⑥ Threaded connection, G (ISO 228-1). Flange connection, PN40.
⑦ Flange connection, PN16

INFORMATION!
CRN certification (pending)
There is a CRN certification option for devices with process connections that agree with ASME standards. This certification is necessary for all devices that are installed on a pressure vessel and used in Canada.

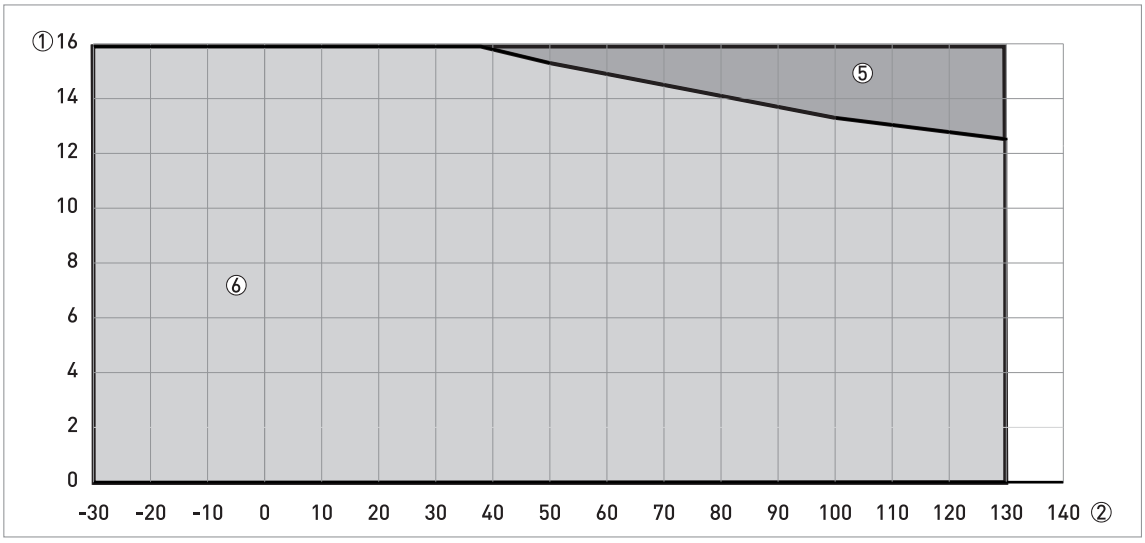

Figure 8-8: Pressure / temperature de-rating (ASME B16.5), flange and threaded connections, in °C and barg

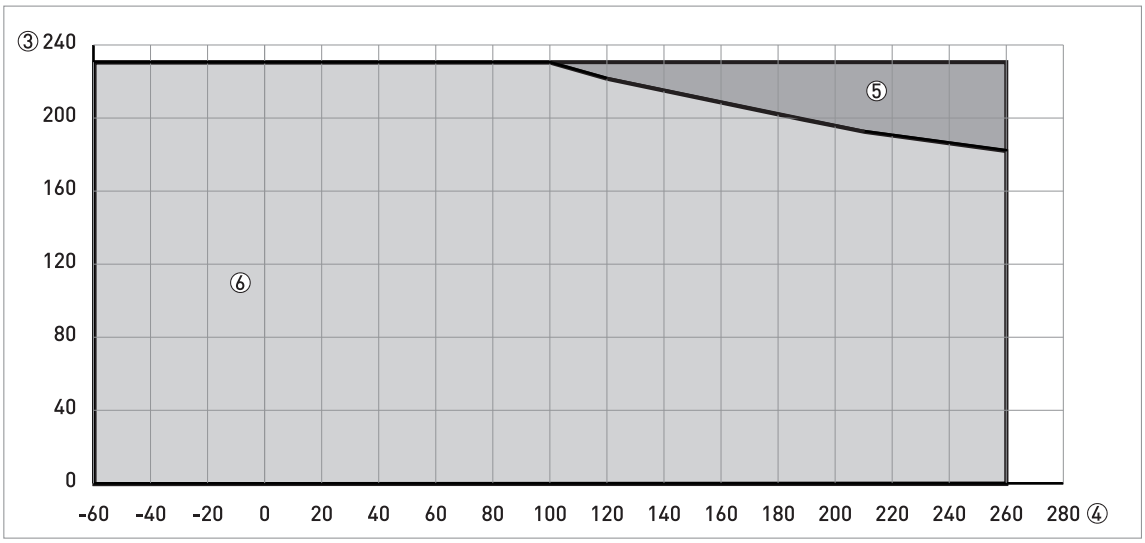

Figure 8-9: Pressure / temperature de-rating (ASME B16.5), flange and threaded connections, in °F and psig

① Process pressure, p [barg]
② Process connection temperature, T [°C]
③ Process pressure, p [psig]
④ Process connection temperature, T [°F]
⑤ Threaded connection, NPT (ASME B1.20.1). Flange connection, Class 300.
⑥ Flange connection, Class 150

8.6 Dimensions and weights

Metallic Horn antennas with threaded connections

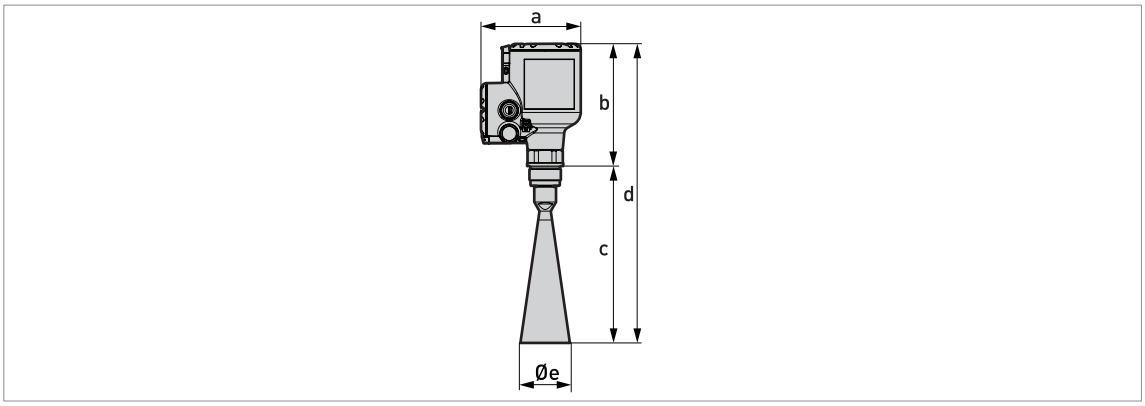

Figure 8-10: Metallic Horn antennas with G or NPT threaded connections

INFORMATION!

- *The diameter of the outer sheath of the cable must be 7…12 mm or 0.28…0.47˝.*
- *Cable glands for cQPSus-approved devices must be supplied by the customer.*
- *A weather protection cover is available as an accessory with all devices.*

Metallic Horn antennas with threaded connections: Dimensions in mm

Horn antenna version	Dimensions [mm]				
	a	b	c	d	Øe
DN80/3˝	151	185	267 ①	452 ①	75
DN100/4˝	151	185	335 ①	520 ①	95
DN150/6˝	151	185	490 ①	675 ①	140
DN200/8˝	151	185	662 ①	847 ①	190

① This is the dimension without the antenna extension option. A maximum of 10 antenna extensions are available. Each antenna extension is 105 mm long.

Metallic Horn antennas with threaded connections: Dimensions in inches

Horn antenna version	Dimensions [inches]				
	a	b	c	d	Øe
DN80/3˝	5.94	7.28	10.51 ①	17.80 ①	2.95
DN100/4˝	5.94	7.28	13.19 ①	20.47 ①	3.74
DN150/6˝	5.94	7.28	19.29 ①	26.57 ①	5.51
DN200/8˝	5.94	7.28	26.06 ①	33.35 ①	7.48

① This is the dimension without the antenna extension option. A maximum of 10 antenna extensions are available. Each antenna extension is 4.1˝ long.

Metallic Horn antenna versions with standard flange connections

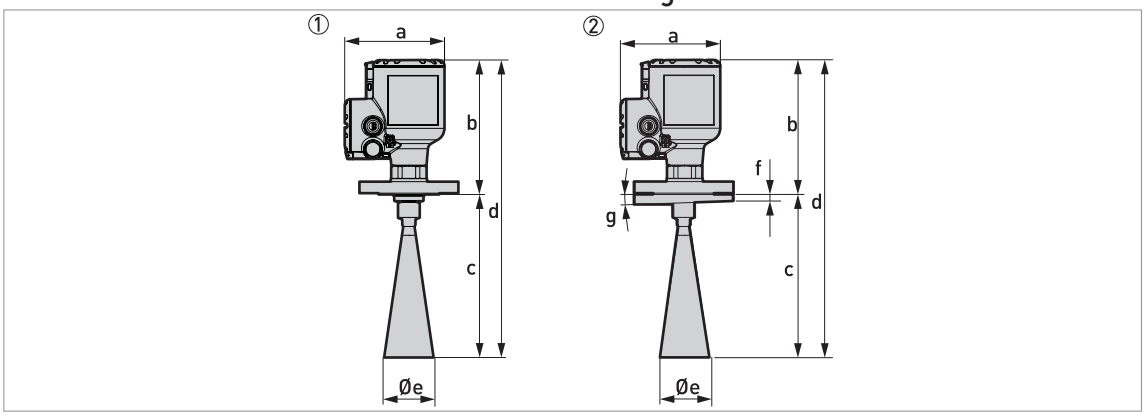

Figure 8-11: Metallic Horn antennas with standard flange connections

① Metallic Horn antenna with a flange connection
② Metallic Horn antenna with a flange connection and the 2° slanted flange option

INFORMATION!

- *The diameter of the outer sheath of the cable must be 7…12 mm or 0.28…0.47˝.*
- *Cable glands for cQPSus-approved devices must be supplied by the customer.*
- *A weather protection cover is available as an accessory with all devices.*

Metallic Horn antennas with standard flange connections: Dimensions in mm

Horn antenna version	Dimensions [mm]						[°]
	a	b	c	d	Øe	f	g
DN80/3˝	151	205...215.6	256...267 ①	461...482 ①	75	10 ②	2° ②
DN100/4˝	151	205...215.6	324...335 ①	529...550 ①	95	10 ②	2° ②
DN150/6˝	151	205...215.6	479...490 ①	684...705 ①	140	10 ②	2° ②
DN200/8˝	151	205...215.6	651...662 ①	856...877 ①	190	10 ②	2° ②

① These are the minimum and maximum values without the antenna extension option. A maximum of 10 antenna extensions are available. Each antenna extension is 105 mm long.
② If the device has the 2° slanted flange option.

Metallic Horn antennas with standard flange connections: Dimensions in inches

Horn antenna version	Dimensions [inches]						[°]
	a	b	c	d	Øe	f	g
DN80/3˝	5.94	8.07...8.49	10.08...10.51 ①	18.15...18.98 ①	2.95	0.39 ②	2° ②
DN100/4˝	5.94	8.07...8.49	12.76...13.19 ①	20.83...21.65 ①	3.74	0.39 ②	2° ②
DN150/6˝	5.94	8.07...8.49	18.86...19.29 ①	26.93...27.76 ①	5.51	0.39 ②	2° ②
DN200/8˝	5.94	8.07...8.49	25.63...26.06 ①	33.70...34.53 ①	7.48	0.39 ②	2° ②

① These are the minimum and maximum values without the antenna extension option. A maximum of 10 antenna extensions are available. Each antenna extension is 4.1˝ long.
② If the device has the 2° slanted flange option.

Metallic Horn antenna versions with low-pressure flange connections

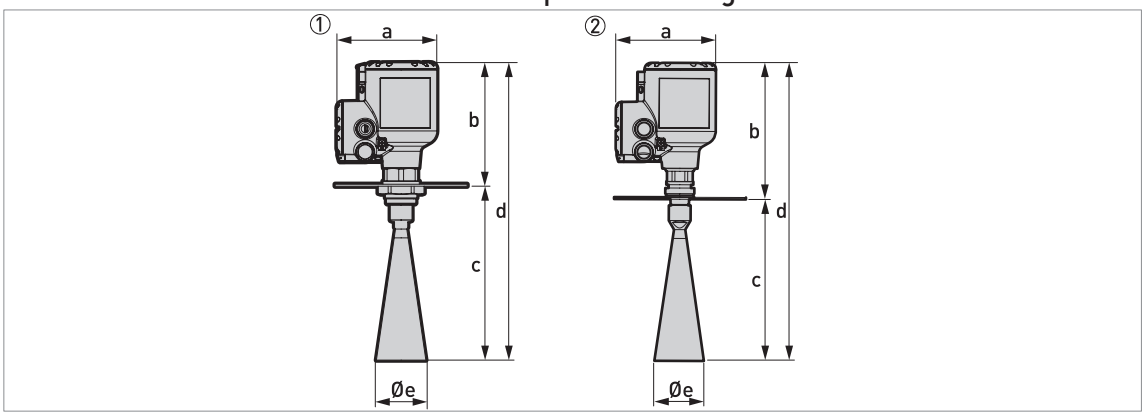

Figure 8-12: Metallic Horn antennas with low-pressure flange connections

① Metallic Horn antenna with a low-pressure flange attached to a G threaded connection (ISO 228-1)
② Metallic Horn antenna with a low-pressure flange attached to an NPT threaded connection (ASME B1.20.1)

INFORMATION!

- *The diameter of the outer sheath of the cable must be 7…12 mm or 0.28…0.47".*
- *Cable glands for cQPSus-approved devices must be supplied by the customer.*
- *A weather protection cover is available as an accessory with all devices.*

Metallic Horn antennas with low-pressure flange connections: Dimensions in mm

Horn antenna version	Dimensions [mm]						
	a	b		c	d		Øe
		G	NPT		G	NPT	
DN80/3"	151	215	247	262 ①	452 ①	509 ①	75
DN100/4"	151	215	247	331 ①	521 ①	578 ①	95
DN150/6"	151	215	247	486 ①	675 ①	733 ①	140
DN200/8"	151	215	247	657 ①	847 ①	904 ①	190

① This is the dimension without the antenna extension option. A maximum of 10 antenna extensions are available. Each antenna extension is 105 mm long.

Metallic Horn antennas with low-pressure flange connections: Dimensions in inches

Horn antenna version	Dimensions [mm]						
	a	b		c	d		Øe
		G	NPT		G	NPT	
DN80/3"	5.94	8.46	9.72	10.31 ①	17.79 ①	20.04 ①	2.95
DN100/4"	5.94	8.46	9.72	13.03 ①	20.51 ①	22.76 ①	3.74
DN150/6"	5.94	8.46	9.72	19.13 ①	26.57 ①	28.86 ①	5.11
DN200/8"	5.94	8.46	9.72	25.87 ①	33.35 ①	35.63 ①	7.48

① This is the dimension without the antenna extension option. A maximum of 10 antenna extensions are available. Each antenna extension is 4.1" long.

Drop antennas with threaded connections

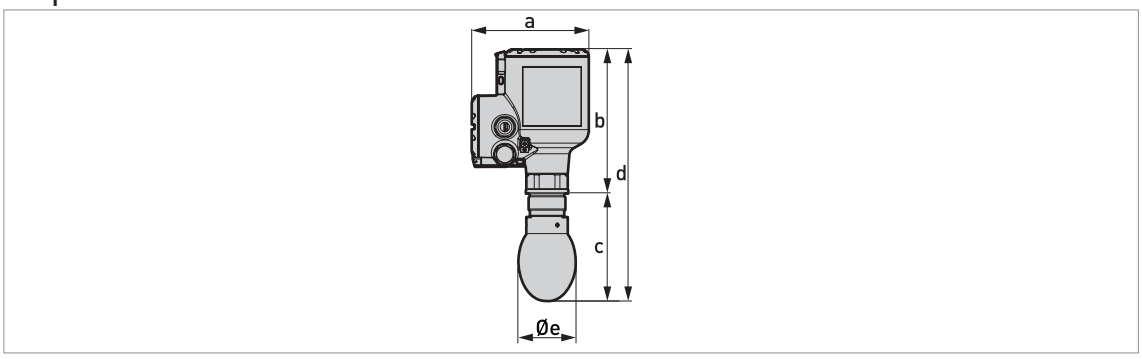

Figure 8-13: Drop antennas with threaded connections

INFORMATION!

- *The diameter of the outer sheath of the cable must be 7…12 mm or 0.28…0.47".*
- *Cable glands for cQPSus-approved devices must be supplied by the customer.*
- *A weather protection cover is available as an accessory with all devices.*

Drop antennas with threaded connections: Dimensions in mm

Drop antenna version	Dimensions [mm]				
	a	b	c	d	Øe
DN80/3¨ PP	151	185	137 ①	322 ①	74
DN80/3¨ PTFE	151	185	139 ①	324 ①	74
DN100/4¨ PP	151	185	160 ①	345 ①	94
DN100/4¨ PTFE	151	185	163 ①	348 ①	94
DN150/6¨ PP	151	185	216 ①	401 ①	144
DN150/6¨ PTFE	151	185	221 ①	406 ①	144

① This is the dimension without the antenna extension option. A maximum of 5 antenna extensions are available. Each antenna extension is 105 mm long.

Drop antennas with threaded connections: Dimensions in inches

Drop antenna version	Dimensions [inches]				
	a	b	c	d	Øe
DN80/3¨ PP	5.94	7.28	5.39 ①	12.68 ①	2.91
DN80/3¨ PTFE	5.94	7.28	5.47 ①	12.76 ①	2.91
DN100/4¨ PP	5.94	7.28	6.30 ①	13.58 ①	3.70
DN100/4¨ PTFE	5.94	7.28	6.42 ①	13.70 ①	3.70
DN150/6¨ PP	5.94	7.28	8.50 ①	15.79 ①	5.67
DN150/6¨ PTFE	5.94	7.28	8.70 ①	15.98 ①	5.67

① This is the dimension without the antenna extension option. A maximum of 5 antenna extensions are available. Each antenna extension is 4.1¨ long.

Drop antennas with standard flange connections

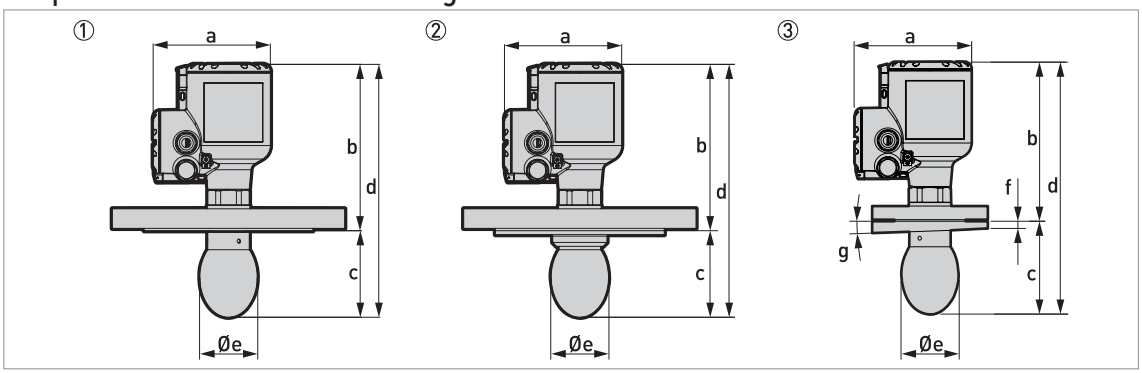

Figure 8-14: Drop antennas with standard flange connections

① Drop antenna with a flange connection
② Drop antenna with a flange connection and a flange plate protection option
③ Drop antenna with a flange connection and a 2° slanted flange option

INFORMATION!

- *The diameter of the outer sheath of the cable must be 7…12 mm or 0.28…0.47˝.*
- *Cable glands for cQPSus-approved devices must be supplied by the customer.*
- *A weather protection cover is available as an accessory with all devices.*

Drop antennas with standard flange connections: Dimensions in mm

Drop antenna version	Dimensions [mm]						[°]
	a	b	c	d	Øe	f	g
DN80/3¨ PP	151	205...215.6	126...136 ①	331...352 ①	74	②	③
DN80/3¨ PTFE	151	205...215.6	128...139 ①	333...355 ①	74	②	③
DN100/4¨ PP	151	205...215.6	149...159 ①	354...375 ①	94	②	③
DN100/4¨ PTFE	151	205...215.6	152...162 ①	357...378 ①	94	②	③
DN150/6¨ PP	151	205...215.6	205...216 ①	410...431 ①	144	②	③
DN150/6¨ PTFE	151	205...215.6	210...221 ①	415...436 ①	144	②	③

① These are the minimum and maximum values without the antenna extension option. A maximum of 5 antenna extensions are available. Each antenna extension is 105 mm long.
② If the device has the PP or PTFE flange protection option, then f = 20 mm. If the device has the 2° slanted flange option, then f = 10 mm.
③ If the device has the 2° slanted flange option, then g = 2°

Drop antennas with standard flange connections: Dimensions in inches

Drop antenna version	Dimensions [inches]						[°]
	a	b	c	d	Øe	f	g
DN80/3¨ PP	5.94	8.07...8.49	4.96...5.35 ①	13.03...13.98 ①	2.91	②	③
DN80/3¨ PTFE	5.94	8.07...8.49	5.04...4.47 ①	13.11...13.98 ①	2.91	②	③
DN100/4¨ PP	5.94	8.07...8.49	5.87...6.26 ①	13.94...14.76 ①	3.70	②	③
DN100/4¨ PTFE	5.94	8.07...8.49	5.98...6.38 ①	14.06...14.88 ①	3.70	②	③
DN150/6¨ PP	5.94	8.07...8.49	8.07...8.50 ①	16.14...16.97 ①	5.67	②	③
DN150/6¨ PTFE	5.94	8.07...8.49	8.27...8.70 ①	16.34...17.16 ①	5.67	②	③

① These are the minimum and maximum values without the antenna extension option. A maximum of 5 antenna extensions are available. Each antenna extension is 4.1¨ long.
② If the device has the PP or PTFE flange protection option, then f = 0.79¨. If the device has the 2° slanted flange option, then f = 0.39¨.
③ If the device has the 2° slanted flange option, then g = 2°

Drop antennas with low-pressure flange connections

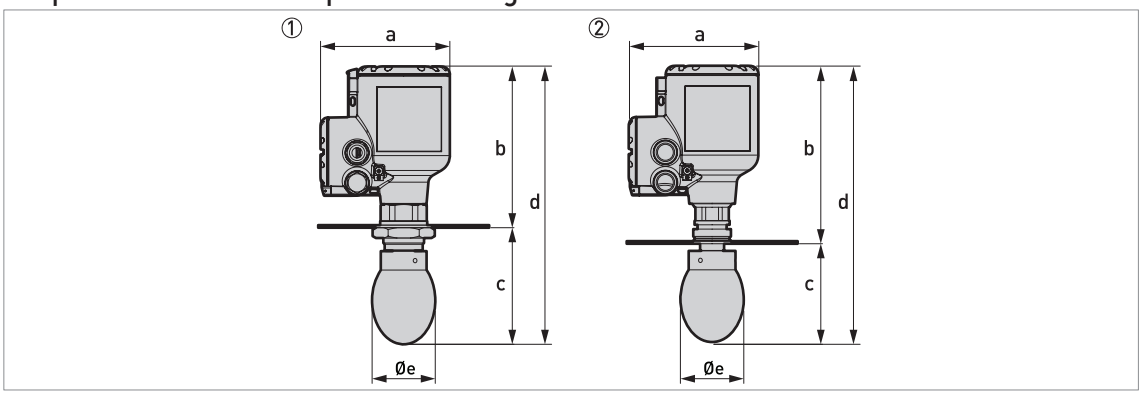

Figure 8-15: Drop antennas with low-pressure flange connections

① Metallic Horn antenna with a low-pressure flange attached to a G threaded connection (ISO 228-1)
② Metallic Horn antenna with a low-pressure flange attached to an NPT threaded connection (ASME B1.20.1)

INFORMATION!

- *The diameter of the outer sheath of the cable must be 7…12 mm or 0.28…0.47˙.*
- *Cable glands for cQPSus-approved devices must be supplied by the customer.*
- *A weather protection cover is available as an accessory with all devices.*

Drop antennas with low-pressure flange connections: Dimensions in mm

Drop antenna version	Dimensions [mm]						
	a	b		c	d		Øe
		G	NPT		G	NPT	
DN80/3¨	151	188	220	136 ①	324 ①	356 ①	74
DN100/4¨	151	188	220	159 ①	347 ①	379 ①	94
DN150/6¨	151	188	220	217 ①	405 ①	437 ①	144

① This is the dimension without the antenna extension option. A maximum of 5 antenna extensions are available. Each antenna extension is 105 mm long.

Drop antennas with low-pressure flange connections: Dimensions in inches

Drop antenna version	Dimensions [mm]						
	a	b		c	d		Øe
		G	NPT		G	NPT	
DN80/3¨	5.94	7.40	8.66	5.35 ①	12.76 ①	14.01 ①	2.91
DN100/4¨	5.94	7.40	8.66	6.26 ①	13.66 ①	14.92 ①	3.70
DN150/6¨	5.94	7.40	8.66	8.54 ①	15.94 ①	17.20 ①	5.67

① This is the dimension without the antenna extension option. A maximum of 5 antenna extensions are available. Each antenna extension is 4.1¨ long.

Purging option

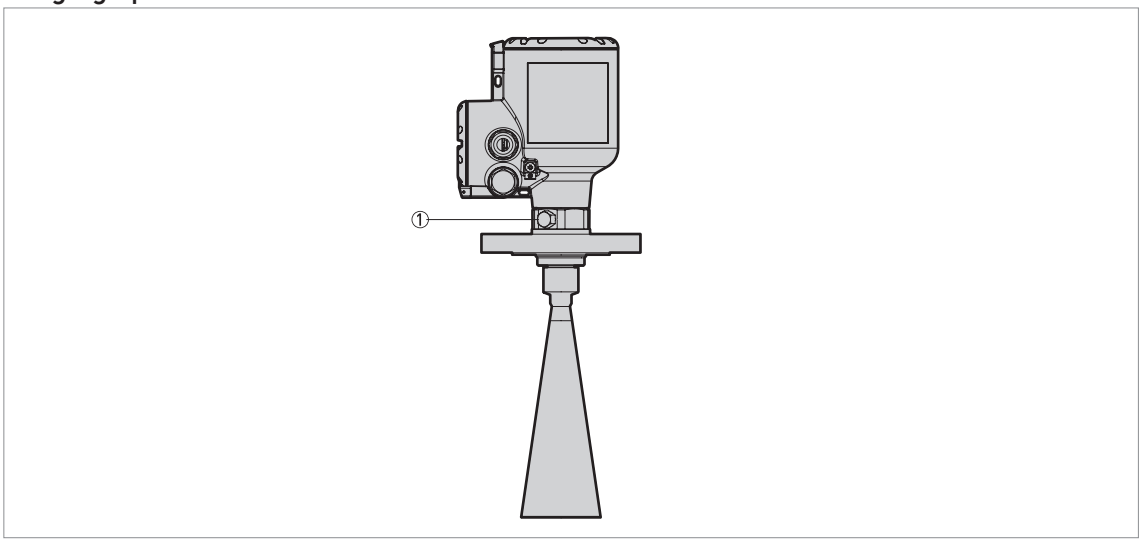

Figure 8-16: Purging options

① 1/8 NPTF threaded connection for purging system (the plug is supplied by the manufacturer)

INFORMATION!
Purging system
This option is available for all Metallic Horn antennas. Flange connections must have a pressure rating of PN16 (EN 1092-1), PN40 (EN 1092-1), Class 150 (ASME B16.5), Class 300 (ASME B16.5), or must be a low-pressure flange (PN01 / 15 psig).

Weather protection option

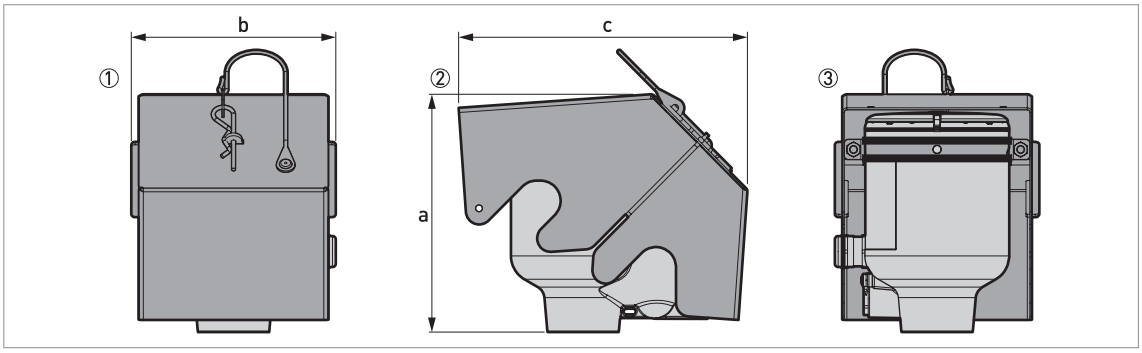

Figure 8-17: Weather protection option

① Front view (with weather protection closed)
② Left side (with weather protection closed)
③ Rear view (with weather protection closed)

Weather protection: Dimensions and weights

	Dimensions						Weights [kg]	
	a		b		c			
	[mm]	[inch]	[mm]	[inch]	[mm]	[inch]	[kg]	[lb]
Weather protection	177	6.97	153	6.02	216	8.50	1.3	2.9

Converter weight

Type of housing	Weights	
	[kg]	[lb]
Compact aluminium housing	2.1	4.6
Compact stainless steel housing	4.5	9.9

Antenna option weights

Antenna options	Min./Max. weights	
	[kg]	[lb]
Standard options, without converter		
DN80 / 3¨ Metallic Horn antenna with process connection, standard length ①	2.5...58.9	5.5...129.6
DN100 / 4¨ Metallic Horn antenna with process connection, standard length ①	2.6...59	5.7...129.8
DN150 / 6¨ Metallic Horn antenna with process connection, standard length ①	3...59.4	6.6...130.7
DN200 / 8¨ Metallic Horn antenna with process connection, standard length ①	3.7...60	8.1...132
DN80 PP Drop antenna with process connection, standard length ①	2.7...59.1	5.9...130
DN100 PP Drop antenna with process connection, standard length ①	3.1...59.5	6.8...131.2
DN150 PP Drop antenna with process connection, standard length ①	4.5...60.9	9.9..134
DN80 PTFE Drop antenna with process connection, standard length ①	3.1...59.2	6.8...130.9
DN100 PTFE Drop antenna with process connection, standard length ①	3.8...60.2	8.4...132.7
DN150 PTFE Drop antenna with process connection, standard length ①	7.2...63.6	15.8..139.9
Antenna extension options		
Straight extension, length 105 mm ②	+0.92	+2.03
Straight extension, length 210 mm ②	+1.84	+4.06
Straight extension, length 315 mm ②	+2.76	+6.08
Straight extension, length 420 mm ②	+3.68	+8.11
Straight extension, length 525 mm ②	+4.60	+10.14
Straight extension, length 630 mm ③	+5.52	+12.17
Straight extension, length 735 mm ③	+6.44	+14.20
Straight extension, length 840 mm ③	+7.36	+16.23
Straight extension, length 945 mm ③	+8.28	+18.25
Straight extension, length 1050 mm ③	+9.20	+20.28
Other options		
Flange plate option, DN80 PP Drop antenna	+0.1	+0.22
Flange plate option, DN100 PP Drop antenna	+0.2	+0.44
Flange plate option, DN150 PP Drop antenna	+0.3	+0.66
Flange plate option, DN80 PTFE Drop antenna	+0.3	+0.66
Flange plate option, DN100 PTFE Dropantenna	+0.5	+1.10
Flange plate option, DN150 PTFE Drop antenna	+0.7	+1.54

① Standard length = without antenna extensions
② This option is for Metallic Horn and Drop antennas
③ This option is for Metallic Horn antennas

9.1 General description

The HART® Protocol is an open digital communication protocol for industry. It is free to use by anyone. It is included in the software embedded in signal converters of HART-compatible devices.

There are 2 classes of devices which support the HART® Protocol: operating devices and field devices. There are 2 classes of operating devices (Master): PC-supported workstations (Primary Master) and manual control units (Secondary Master). These can be used in control centres and other locations. HART® field devices include sensors, converters and actuators. Field devices include 2-wire and 4-wire devices, and also intrinsically-safe versions for use in hazardous areas.

There are 2 primary operation modes for HART-compatible devices: point-to-point mode and multi-drop mode.

If the device is used in point-to-point mode, the HART® Protocol uses the Bell 202 Frequency Shift Keying (FSK) standard to put a digital signal on top of the 4...20 mA signal. The connected device sends and receives digital signals that agree with the HART® Protocol, and sends analog signals at the same time. Only 1 device can be connected to the signal cable.

If the device is used in multi-drop mode, the network only uses a digital signal that agrees with the HART® Protocol. The loop current is set to 4 mA. You can connect a maximum of 63 devices to the signal cable.

An FSK or HART® modem is included in field devices and manual control units. It is necessary to have an external modem for PC-supported workstations. The external modem is connected to the serial or USB interface.

9.2 Software history

INFORMATION!
In the table below, "x" is a placeholder for possible multi-digit alphanumeric combinations, depending on the available version.

Release date	Devices	HART®	
		Device Revision	DD Revision
2016-04	All revisions	1	1

HART® identification codes and revision numbers

Manufacturer ID:	69 (0x45)
Expanded Device Type:	0x45b9
Device Revision:	1
DD Revision	1
DD Version (NAMUR)	01.11
HART® Universal Revision:	7.4
FC 475 system SW.Rev.:	≥ 3.7
AMS version:	≥ 11.1
PDM version:	≥ 6.0
FDT version:	≥ 1.2

9.3 Connection variants

The signal converter is a 2-wire device with 4...20 mA current output and HART® interface.

- **Multi-Drop Mode is supported**
  In a Multi-Drop communication system, more than 1 device is connected to a common transmission cable.
- **Burst Mode is not supported**

There are two ways of using the HART® communication:

- as Point-to-Point connection and
- as Multi-Drop connection with 2-wire connection.

9.3.1 Point-to-Point connection – analogue / digital mode

Point-to-Point connection between the signal converter and the HART® Master.

The current output of the device is passive.

Also refer to *Point-to-point connection* on page 53.

9.3.2 Multi-Drop connection (2-wire connection)

Up to 63 devices may be installed in parallel (this signal converter and other HART® devices).

For an illustration of multi-drop networks, refer to *Multi-drop networks* on page 54.

For data on communication in multi-drop mode, refer to *HART®* network configuration on page 103.

9.4 HART® device variables

HART® device variable	Code	Type
sensor value	0	linear
level	1	linear
distance	2	linear
reflection	3	linear
level linearization ①	4	linear
volume conversion ②	5	linear
mass conversion ②	6	linear
distance linearization ①	7	linear
ullage volume conversion ②	8	linear
ullage mass conversion ②	9	linear

① This HART® device variable is available if you created a linearization table in the conversion menu
② This HART® device variable is available if you created a strapping table in the conversion menu

The HART® dynamic variables PV (Primary Variable), SV (Secondary Variable), TV (Third Variable) and QV (Fourth Variable) can be assigned to any of the device variables.

The HART® dynamic variable PV is always connected to the HART® current output which is, for example, assigned to level measurement.

9.5 Field Communicator 475 (FC 475)

The Field Communicator is a hand terminal from Emerson Process Management that is designed to configure HART® and Foundation Fieldbus devices. Device Descriptions (DDs) are used to integrate different devices into the Field Communicator.

9.5.1 Installation

CAUTION!
The Field Communicator cannot be used to correctly configure, operate or read data from the device unless the Device Description (DD) file is installed.

System and software requirements for the Field Communicator

- System card that includes the "Easy Upgrade Option"
- Field Communicator Easy Upgrade Programming Utility
- HART® Device Description file

For more data, refer to the Field Communicator User's Manual.

9.5.2 Operation

INFORMATION!
The Field Communicator will not give you access to the service menu. A simulation is only possible for current outputs.

The Field Communicator and the device's local display use almost the same procedures to operate the signal converter. The online help for each menu item refers to the function number given to each menu item on the local device display. Protection of settings is the same as on the device's local display.

The Field Communicator always saves a complete configuration for communication with AMS.

9.6 Asset Management Solutions (AMS®)

The Asset Management Solutions Device Manager (AMS®) is a PC program from Emerson Process Management which is designed to configure and manage HART®, PROFIBUS and Foundation Fieldbus devices. Device Descriptions (DDs) are used to integrate different devices into the AMS®.

9.6.1 Installation

Please read the README.txt file in the Installation Kit.

If the Device Description has not been installed at this time, install the Installation Kit HART® AMS. You can download this .exe file from our website.

For installation data, refer to the "AMS Intelligent Device Manager Books Online" section "Basic AMS Functionality > Device Configurations > Installing Device Types > Procedures > Install device types from media".

9.6.2 Operation

INFORMATION!
For more data, refer to HART® menu tree for AMS on page 154.

9.6.3 Parameter for the basic configuration

Due to AMS requirements and conventions, there are differences when operating the signal converter with AMS and operating using the local keyboard. The service menu parameters are not supported and simulation is only possible for current outputs. The online help for each parameter contains its function number as a reference to the local device display.

9.7 Field Device Tool / Device Type Manager (FDT / DTM)

A Field Device Tool Container (FDT Container) is a PC program used to configure HART®, PROFIBUS and FOUNDATION™ fieldbus devices. To configure a device, an FDT container uses the applicable Device Type Manager (DTM).

9.7.1 Installation

Before you operate the device, the Device Type Manager (Device DTM) must be installed in the Field Device Tool Container. You can download this .msi file from our website. For installation and configuration data, refer to the documentation that is supplied with the Device DTM in the "Downloads" section of the website.

9.7.2 Operation

The DTM and the device's local display use almost the same procedures to operate the signal converter. For more data, refer to *Operation* on page 61.

9.8 Process Device Manager (PDM)

The Process Device Manager (PDM) is a Siemens PC program designed to configure HART® and PROFIBUS devices. Device Descriptions (DDs) are used to integrate different devices into the PDM.

9.8.1 Installation

Install Device Description files supplied in the Device Install HART® PDM folder. This is necessary for each type of field device that is used with SIMATIC PDM. This folder is available for download from the website.

If you use PDM version 5.2, refer to PDM manual, section 11.1 - Install device / Integrate device into SIMATIC PDM with Device Install.

If you use PDM version 6.0, refer to PDM manual, section 13 - Integrating devices.

For more data, refer to “readme.txt”. You can find this file in the Installation Kit.

9.8.2 Operation

INFORMATION!
For more data, refer to HART® menu tree for PDM on page 158.

There can be differences between the names of menus in the SIMATIC PDM software tool and menus shown on the device display screen. Refer to the online help in SIMATIC PDM to find the function number of each menu item. This function number agrees with the function number in the device menus.

Use the same procedure for the protection of parameters in the supervisor menu.

9.9 HART® menu tree for AMS

Abbreviations of the following tables:

- Opt Optional, depending on device version and configuration
- Rd Read only

9.9.1 Overview AMS menu tree (positions in menu tree)

Configure / Setup	Quick Setup	General
		Security
		Units
		Application
	Full Setup	Process
		Output
		Display
		Device
		Hart
	Service[Opt]	Calibration
		Information
Device Diagnostics	Device Status	
	Actual Values	
	Simulation	
	Test/Reset	
	Information	
Process Variables	Measured Values	
	Inputs/Outputs	

9.9.2 AMS menu tree (details for settings)

Configure / Setup

Quick Setup	General	Language / Tag / Long Tag
	Security	Login / Change Password / Reset Passwords / Lock Status[Rd] / Lock / Unlock Device / Write Protect[Rd] / (De)activate Write Protection / Unlock Extended Range
	Units	Unit Length / Unit Volume / Unit Mass
	Application Assistant	Standard Setup / Record Empty Spectrum

Full Setup	Process	Install. Parameters	Tank Type / Tank Height / Blocking Distance / Time Constant / Antenna Type / Antenna Extension / Distance Piece / Reference Offset / Tank Bottom Offset
		Process	Tracking Velocity / Epsilon R Product / Epsilon R Gas / Measuring Mode / Overfill Detection / Overfill Threshold[Opt] / Mult. Refl. Enable / Empty Spectrum Enable / Min. Peak Required / Min Plausibility Window
		Conversion	Select Conversion / Entry Count[Rd] / Conversion Table
Full Setup	Output	General	Type IO channel A[Rd] / Type IO Channel B[Rd]
		Current Output 1	Current Out 1 Variable / 0% Range / 100% Range / Current Out Range / Error Function / Low Error Current / High Error Current / D/A Trim PV[Opt]
Full Setup	Display	General	Language / Backlight
		1st Measurement Page	Function / 1st Value Variable / Format 1st Value / 2nd Value Variable[Opt] / Format 2nd Value[Opt] / 3rd Value Variable[Opt] / Format 3rd Value[Opt] / 0% Range[Opt] / 100% Range[Opt]
		2nd Measurement Page	Function / 1st Value Variable / Format 1st Value / 2nd Value Variable[Opt] / Format 2nd Value[Opt] / 3rd Value Variable[Opt] / Format 3rd Value[Opt] / 0% Range[Opt] / 100% Range[Opt]

Full Setup	Device	Information	Tag[Rd] / Long Tag[Rd] / Serial Number[Rd] / Manufacturer[Rd] / Device Name[Rd] / V Number[Rd] / Electronic Revision[Rd] / Field Device Revision[Rd] / Software Revision[Rd] / Hardware Revision[Rd] / Electronics Serial No.[Rd] / Production Date[Rd]
		Security	Login / Change Password / Reset Passwords / Lock Status[Rd] / Lock / Unlock Device / Write Protect[Rd] / (De)activate Write Protection / Unlock Extended Range
		Units	Unit Length / Unit Volume / Unit Mass
		Log	Operating Time[Rd] / Reset Log-Messages
		Factory Default	Reset To Fact. Default
Full Setup	HART	Identification & Info	Loop current Mode / Online Mode / Poll Address / Tag / Long Tag / Manufacturer[Rd] / Model[Rd] / Device Id[Rd] / Universal Rev[Rd] / Field Device Rev[Rd] / DD-Version[Rd] / Descriptor / Message / Date / Final assembly number / Configuration change count[Rd] / Software Rev[Rd] / Hardware rev[Rd] / Write Protect[Rd] / Number of request preambles[Rd] / Number of response preambles[Rd]
Service	Calibration	Calibration	Current Output 1
		Sensor	Manual Correction Offset / Manual Correction Factor / Correction Offset[Rd] / Correction Factor[Rd] / Correction Offset Extended[Rd, Opt] / Correction Factor Extended[Rd, Opt]

Device Diagnostics

Device Status	Condensed Status (NE 107)	Condensed Status (NE 107)Rd / Device Simulation ActiveRd
	Standard	Device StatusRd / Ext. Device StatusRd / Write ProtectRd / Device Diagnostic Status 0Rd / Device Diagnostic Status 1Rd / AO SaturatedRd / AO FixedRd
	Additional	Device Status SimulationRd / Failure (F)Rd / Function Check (C)Rd / Out of Specification (S)Rd / Maintenance Required (M)Rd / Electronics InformationRd / Sensor InformationRd
	Cluster Check	Cluster NumberRd / Failed Cluster CheckRd
Actual Values	Operating TimeRd / Sensor ValueRd / Media LevelRd / DistanceRd / ReflectionRd / Level Linearization$^{Rd, Opt}$ / Volume$^{Rd, Opt}$ / Mass$^{Rd, Opt}$ / Distance Linearization$^{Rd, Opt}$ / Ullage$^{Rd, Opt}$ / Ullage Mass$^{Rd, Opt}$ / Sensor TempRd / Converter TempRd	
Simulation	Process Variables	Simulation Values
	Device Status	Enable/Disable Status Simulation / Status Simulation^{Opt}
	I/O	Loop Test
Test / Reset	Device Reset / Reset Configuration Changed Flag	
Information	TagRd / Long TagRd / Serial NumberRd / ManufacturerRd / Device NameRd / V NumberRd / Electronic RevisionRd / Field Device RevisionRd / Software RevisionRd / Hardware RevisionRd / Electronics Serial No.Rd / Production DateRd / Calibration DateRd / Operating TimeRd	

Process variables

Measured Value	Sensor ValueRd / Media LevelRd / DistanceRd / ReflectionRd / Level Linearization$^{Opt, Rd}$ / Volume$^{Opt, Rd}$ / Mass$^{Opt, Rd}$ / Distance Linearization$^{Opt, Rd}$ / Ullage$^{Opt, Rd}$ / Ullage Mass$^{Opt, Rd}$
Inputs / Out	PVRd / PV % RangeRd / PV output currentRd / SVRd / TVRd / QVRd

9.10 HART® menu tree for PDM

Abbreviations of the following tables:

- Opt Optional, depending on device version and configuration
- Rd Read only
- Cust Custody lock protection
- Loc Local PDM, affects only PDM views

9.10.1 Overview PDM menu tree (positions in menu tree)

Overview: Device Menu

Download To Device...		
Upload To PG/PC...		
Quick Setup	General	
	Security	
	Units	
	Application Assistant	
Full Setup	Process	Install. Parameters
		Process
		Conversion
	Output	General
		Current Output 1
	Display	General
		1st Measurement Page
		2nd Measurement Page
	Device	Information
		Security
		Units
		Log
		Factory Default
	HART	Identification & Info
Service	Calibration	Calibration
		Sensor

Overview: View Menu

Measured Value
Input / Outputs

Overview: Diagnosis

Device Status	Condensed Status (NE 107)
	Standard
	Additional
	Cluster Check
Actual Values	

Simulation	Process Variables
	Device Status
	I/O
Test / Reset	
Information	

9.10.2 PDM menu tree (details for settings)

Device Menu

Download To Device...

Upload To PG/PC...

Quick Setup

General	Language / Tag / Long Tag
Security	Login / Change Password / Reset Passwords / Lock StatusRd / Lock/Unlock Device / Write ProtectRd / (De)activate Write Protection / Unlock Extended Range
Units	Unit Length / Unit Volume / Unit Mass
Application Assistant	Standard Setup / Record Empty Spectrum

Full Setup

Process	Install. Parameters	Tank Type / Tank Height / Blocking Distance / Time Constant / Antenna Type / Antenna Extension / Distance Piece / Reference Offset / Tank Bottom Offset
	Process	Tracking Velocity / Epsilon R Product / Epsilon R Gas / Measuring Mode / Overfill Detection / Overfill Threshold^{Opt} / Mult. Refl. Enable / Empty Spectrum Enable / Min. Peak Required / Min Plausibility Window
	Conversion	Select Conversion / Entry CountRd / Conversion Table
Output	General	Type IO channel ARd / Type IO Channel BRd
	Current Output 1	Current Out 1 Variable / 0% Range / 100% Range / Current Out Range / Error Function / Low Error Current / High Error Current / D/A Trim PV^{Opt}
Display	General	Language / Backlight
	1st Measurement Page	Function / 1st Value Variable / Format 1st Value / 2nd Value Variable^{Opt} / Format 2nd Value^{Opt} / 3rd Value Variable^{Opt} / Format 3rd Value^{Opt} / 0% Range^{Opt} / 100% Range^{Opt}
	2nd Measurement Page	Function / 1st Value Variable / Format 1st Value / 2nd Value Variable^{Opt} / Format 2nd Value^{Opt} / 3rd Value VariableOpt / Format 3rd Value^{Opt} / 0% Range^{Opt} / 100% Range^{Opt}

Device	Information	Tag[Rd] / Long Tag[Rd] / Serial Number[Rd] / Manufacturer[Rd] / Device Name[Rd] / V Number[Rd] / Electronic Revision[Rd] / Field Device Revision[Rd] / Software Revision[Rd] / Hardware Revision[Rd] / Electronics Serial No.[Rd] / Production Date[Rd]
	Security	Login / Change Password / Reset Passwords / Lock Status[Rd] / Lock/Unlock Device / Write Protect[Rd] / (De)activate Write Protection / Unlock Extended Range
	Units	Unit Length / Unit Volume / Unit Mass
	Log	Operating Time[Rd] / Reset Log-Messages
	Factory Default	Reset To Fact. Default
HART	Identification & Info	Loop current Mode / Online Mode / Poll Address / Tag / Long Tag / Manufacturer[Rd] / Model[Rd] / Device Id[Rd] / Universal Rev[Rd] / Field Device Rev[Rd] / DD-Version[Rd] / Descriptor / Message / Date / Final assembly number / Configuration change count[Rd] / Software Rev[Rd] / Hardware rev[Rd] / Write Protect[Rd] / Number of request preambles[Rd] / Number of response preambles[Rd]
HART	Identification & Info	Loop current Mode / Online Mode
		Poll Address / Tag / Long Tag / Manufacturer[Rd] / Model[Rd] / Device Id[Rd] / Universal Rev[Rd] / Field Device Rev[Rd] / DD-Version[Rd] / Descriptor / Message / Date / Final assembly number / Configuration change count[Rd] / Software Rev[Rd] / Hardware rev[Rd] / Write Protect[Rd] / Number of request preambles[Rd] / Number of response preambles[Rd]

Service

Calibration	Calibration	Current Output 1
	Sensor	Manual Correction Offset / Manual Correction Factor / Correction Offset[Rd] / Correction Factor[Rd] / Correction Offset Extended[Rd, Opt] / Correction Factor Extended[Rd, Opt]

View Menu

Measurement Value

Sensor Value[Rd] / Media Level[Rd] / Distance[Rd] / Reflection[Rd] / Level Linearization[Opt, Rd] / Volume[Opt, Rd] / Mass[Opt, Rd] / Distance Linearization[Opt, Rd] / Ullage[Opt, Rd] / Ullage Mass[Opt, Rd]

Input / Outputs

PV[Rd] / PV % Range[Rd] / PV output current[Rd] / SV[Rd] / TV[Rd] / QV[Rd]

Diagnosis

Device Status

Condensed Status (NE 107)	Condensed Status (NE 107)Rd / Device Simulation ActiveRd
Standard	Device StatusRd / Ext. Device StatusRd / Write ProtectRd / Device Diagnostic Status 0Rd / Device Diagnostic Status 1Rd / AO SaturatedRd / AO FixedRd
Additional	Device Status SimulationRd / Failure (F)Rd / Function Check (C)Rd / Out of Specification (S)Rd / Maintenance Required (M)Rd / Electronics InformationRd / Sensor InformationRd
Cluster Check	Cluster NumberRd / Failed Cluster CheckRd

Actual Values

Operating TimeRd / Sensor ValueRd / Media LevelRd / DistanceRd / ReflectionRd / Level Linearization$^{Rd, Opt}$ / Volume$^{Rd, Opt}$ / Mass$^{Rd, Opt}$/ Distance Linearization$^{Rd, Opt}$ / Ullage Volume$^{Rd, Opt}$ / Ullage Mass$^{Rd, Opt}$ / Sensor TempRd / Converter TempRd

Simulation

Process Variables	Simulation Values
Device Status	Enable/Disable Status Simulation / Status Simulation^{Opt}
I/O	Loop Test

Test / Reset

Device Reset / Reset Configuration Changed Flag
Information
TagRd / Long TagRd / Serial NumberRd / ManufacturerRd / Device NameRd / V NumberRd / Electronic RevisionRd / Field Device RevisionRd / Software RevisionRd / Hardware RevisionRd / Electronics Serial No.Rd / Production DateRd / Calibration DateRd / Operating TimeRd

10.1 Order code

Make a selection from each column to get the full order code.

VFDC	4	0	**OPTIWAVE 6400 C 24 GHz radar (FMCW) level transmitter for solids from granulates to rocks (up to 16 barg (232 psig) and 130°C (266°F))**					
			Regional directives					
			1	Europe				
			2	China				
			3	USA				
			4	Canada				
			5	Brazil				
			6	Australia				
			A	Russia				
			B	Kazakhstan				
			C	Belarus				
			W	Worldwide				
				Ex approvals				
				0	Without			
				1	ATEX II 1/2 G Ex ia IIC T6…T4 Ga/Gb + II 1/2 D Ex ia IIIC T85°C…T100°C or T85°C…T130°C Da/Db			
				2	ATEX II 1/2 GD Ex db ia IIC T6…T4 Ga/Gb + II 1/2 D Ex ia tb IIIC T85°C…T100°C or T85°C…T130°C Da/Db			
				3	ATEX II 3 G Ex ic IIC T6…T4 Gc + II 3 D Ex ic IIIC T85°C…T100°C or T85°C…T130°C Dc			
				4	ATEX II 3 G Ex nA T6…T4 Gc			
				5	NEPSI Ex ia IIC T6…T4 Ga/Gb + Ex iaD 20/21 T85°C…T100°C or T85°C…T130°C IP6X			
				6	NEPSI Ex d ia IIC T6…T4 Ga/Gb + Ex iaD tD A20/A21 T85°C…T100°C or T85°C…T130°C IP6X			
				A	cQPSus IS CL I/II/III DIV 1 GP A-G + CL I Z0 AEx ia/Ex ia IIC T6…T4 Ga + Z20 AEx ia/Ex ia IIIC T85°C…T100°C or T85°C…T130°C Da			
				B	cQPSus XP-IS/DIP CL I DIV 1 GP A-G + CL I Z1 AEx db ia/Ex db ia IIC T6…T4 Gb + Z21 AEx ia tb/Ex ia tb IIIC T85°C…T100°C or T85°C…T130°C Db ①			
				C	cQPSus NI CL I/II/III DIV 2 GP A-G + CL I Z2 AEx nA/Ex nA IIC T6…T4 Gc			
				K	IECEx Ex ia IIC T6…T4 Ga/Gb + Ex ia IIIC T85°C…T100°C or T85°C…T130°C Da/Db			
				L	IECEx Ex d ia IIC T6…T4 Ga/Gb + Ex ia tb IIIC T85°C…T100°C or T85°C…T130°C Da/Db			
				M	IECEx Ex ic IIC T6…T4 Gc + Ex ic IIIC T85°C…T100°C or T85°C…T130°C Dc			
				P	EAC Ex Ga/Gb Ex ia T6…T4 + Ex ia IIIC T85°C…T100°C or T85°C…T130°C Da/Db			
				R	EAC Ex Ga/Gb Ex d ia T6…T4 + Ex ia tb IIIC T85°C…T100°C or T85°C…T130°C Da/Db			
					0	**Construction**		
						0	Without	
						2	CRN / ASME B31.3 ②	
						4	ASME B31.3	
							Converter version (Housing material / IP class)	
							2	C / Compact version (aluminium housing – IP66/68 0.1 barg)
							3	C / Compact version (stainless steel housing – IP66/68 0.1 barg) ③
VFDC	4	0			0			**Order code (complete this code on the pages that follow)**

								Outputs						
								1	2-wire / 4...20mA passive HART®					
								6	FOUNDATION™ fieldbus (2 wire) ②					
								7	PROFIBUS PA (2 wire) ②					
									Cable entry / cable gland					
									1	M20×1.5 / without				
									2	M20×1.5 / 1 × plastic + plug				
									3	M20×1.5 / 1 × nickel-plated brass + plug				
									4	M20×1.5 / 1 × stainless steel + plug				
									5	M20×1.5 / 1 × M12 (4-pin connector) + plug				
									6	M20×1.5 / 2 × plastic				
									7	M20×1.5 / 2 × nickel-plated brass				
									8	M20×1.5 / 2 × stainless steel				
									A	M20×1.5 / 2 × M12 (4-pin connector)				
									C	½ NPT nickel-plated brass adaptor / without				
									D	½ NPT nickel-plated brass adaptor / 1 × nickel-plated brass + plug				
									E	½ NPT stainless steel adaptor / 1 × stainless steel + plug				
									F	½ NPT nickel-plated brass adaptor / 2 × nickel-plated brass				
									G	½ NPT stainless steel adaptor / 2 × stainless steel				
										Display				
										0	Without (no display, cover without window)			
										4	Plug-in display (cover with window)			
											Display – Documentation language			
											1	English		
											2	German		
											3	French		
											4	Italian		
											5	Spanish		
											6	Portuguese		
											7	Japanese		
											8	Chinese (simplified)		
											A	Russian		
											B	Czech		
											C	Turkish		
											D	Polish		
												0	**Process conditions (Pressure, temperature, material and remarks) / Process seal**	
												0	Without	
												1	-1…16 barg (-14.5…232 psig) / -40°C...+130°C (-40°F…+266°F) / FKM/FPM	
												2	-1…16 barg (-14.5…232 psig) / -50°C...+130°C (-58°F…+266°F) / EPDM	
												3	-1…16 barg (-14.5…232 psig) / -20°C...+130°C (-4°F…+266°F) / Kalrez® 6375	
VFDC	4	0			0									**Order code (complete this code on the pages that follow)**

														Antennas (antenna type, material, radio approval)				
														0	Without			
														4	Metallic Horn, DN80 (3¨) / 316L / LPR ④			
														5	Metallic Horn, DN100 (4¨) / 316L / LPR ④			
														6	Metallic Horn, DN150 (6¨) / 316L / LPR ④			
														7	Metallic Horn, DN200 (8¨) / 316L / LPR ④			
														A	Drop, DN80 (3¨) / PP / LPR ④			
														B	Drop, DN100 (4¨) / PP / LPR ④			
														C	Drop, DN150 (6¨) / PP / LPR ④			
														E	Drop, DN80 (3¨) / PTFE / LPR ④			
														F	Drop, DN100 (4¨) / PTFE / LPR ④			
														G	Drop, DN150 (6¨) / PTFE / LPR ④			
															Antenna extension / Flange plate protection			
															0	Without		
															Extension			
															1	105 mm (4¨) / 316L		
															2	210 mm (8¨) / 316L		
															3	315 mm (12¨) / 316L		
															4	420 mm (17¨) / 316L		
															5	525 mm (21¨) / 316L		
															6	630 mm (24¨) / 316L for Metallic Horn antennas		
															7	735 mm (29¨) / 316L for Metallic Horn antennas		
															8	840 mm (33¨) / 316L for Metallic Horn antennas		
															A	945 mm (37¨) / 316L for Metallic Horn antennas		
															B	1050 mm (41¨) / 316L for Metallic Horn antennas		
																Process connection: Size / Pressure class / Flange face finish		
																0	0	0	Without
																ISO 228 (threaded connection)		
																F	P	0	G 1 A
																G	P	0	G 1 1/2 A
																ASME B1.20.1 (threaded connection)		
																F	A	0	1 NPT
																G	A	0	1 1/2 NPT
																Low-pressure EN flange (screwed to G 1½A connection)		
																L	C	7	DN80 PN01
																M	C	7	DN100 PN01
																P	C	7	DN150 PN01
																R	C	7	DN200 PN01
VFDC	4	0			0							0							**Order code (complete this code on the pages that follow)**

															Low-pressure ASME flange (screwed to 1½ NPT connection)			
															L	1	B	3¨ 150 lb, 15 psig max.
															M	1	B	4¨ 150 lb, 15 psig max.
															P	1	B	6¨ 150 lb, 15 psig max.
															R	1	B	8¨ 150 lb, 15 psig max.
															EN 1092-1 flange			
															L	D	1	DN80 PN10 – Type B1
															L	E	1	DN80 PN16 – Type B1
															L	G	1	DN80 PN40 – Type B1
															M	D	1	DN100 PN10 – Type B1
															M	E	1	DN100 PN16 – Type B1
															M	G	1	DN100 PN40 – Type B1
															P	D	1	DN150 PN10 – Type B1
															P	E	1	DN150 PN16 – Type B1
															P	G	1	DN150 PN40 – Type B1
															R	D	1	DN200 PN10 – Type B1
															R	E	1	DN200 PN16 – Type B1
															ASME B16.5 flange			
															L	1	A	3¨ 150 lb RF
															L	2	A	3¨ 300 lb RF
															M	1	A	4¨ 150 lb RF
															M	2	A	4¨ 300 lb RF
															P	1	A	6¨ 150 lb RF
															P	2	A	6¨ 300 lb RF
															R	1	A	8¨ 150 lb RF
															JIS B2220 flange			
															L	U	P	80A JIS 10K RF
															M	U	P	100A JIS 10K RF
															P	U	P	150A JIS 10K RF
															R	U	P	200A JIS 10K RF
																	Alternative flange facing	
																	EN 1092-1 flange	
																	7	Type A (Flat Face)
																	ASME B16.5 flange	
																	B	FF (Flat Face)
VFDC	4	0			0							0						**Order code (complete this code on the pages that follow)**

																			Calibration certificate		
																			0	Without: Accuracy ±2 mm (±0.08¨)	
																			1	Calibration certificate ±2 mm (±0.08¨) up to 10 m (32.81 ft), 2 points	
																			2	Calibration certificate ±2 mm (±0.08¨) up to 10 m (32.81 ft), 5 points	
																			3	Calibration certificate ±2 mm (±0.08¨) up to 10 m (32.81 ft), 5 points specified by the customer min. ≥ 400 mm (16¨)	
																				Options	
																				0	Without
																				2	Purging system with 1/8 NPTF connection ⑤
																					Accessories / Tag plate
																					0 Without
																					1 Weather protection
																					3 Stainless steel Tag plate (18 characters max.)
																					6 Weather protection + Stainless steel Tag plate (18 characters max.)
VFDC	4	0			0							0									**Order code**

① DIP = Dust Ignition Proof
② Pending
③ This housing option has Ex ia and Ex ic approvals. The Ex d approval for this option is pending.
④ LPR = You can install the antenna in a closed tank or outdoors, but the antenna must point down. Do not install LPR devices near sensitive installations (e.g. a radio astronomy station). TLPR = You must install the antenna in a closed tank.
⑤ Only for Metallic Horn antennas

10.2 Spare parts

We supply spare parts for this device. When you send an order for a mechanical spare part, use the reference numbers in the table that follows. When you send an order for an electronic spare part refer to *Order code* on page 162 and use the VFDC order code.

When you send an order to replace an OPTIWAVE 6300 C signal converter with an OPTIWAVE 6400 C signal converter, use the reference numbers in the "Replacement signal converter for mechanical sub-assembly of the OPTIWAVE 6300 C" table that follows.

Mechanical spare parts

Description	Quantity	Part reference
Antennas		
Metallic Horn, DN80 / 3¨	1	XFDX070300
Metallic Horn, DN100 / 4¨	1	XFDX070400
Metallic Horn, DN150 / 6¨	1	XFDX070500
Metallic Horn, DN200 / 8¨	1	XFDX070600
PP Drop, DN80 / 3¨	1	XFDX070700
PP Drop, DN100 / 4¨	1	XFDX070800
PP Drop, DN150 / 6¨	1	XFDX070900
PTFE Drop, DN80 / 3¨	1	XFDX071000
PTFE Drop, DN100 / 4¨	1	XFDX071100
PTFE Drop, DN150 / 6¨	1	XFDX071200
Gaskets for Drop antennas		
FKM/FPM for antenna + antenna extension gaskets	5	XFDX080100
EPDM for antenna + antenna extension gaskets	5	XFDX080200
Kalrez® 6375 for antenna + antenna extension gaskets	5	XFDX080300
316L antenna extensions		
105 mm / 4¨	1	XFDX090100
210 mm / 8¨	1	XFDX090200
315 mm / 12¨	1	XFDX090300
420 mm / 17¨	1	XFDX090400
525 mm / 21¨	1	XFDX090500
630 mm / 25¨	1	XFDX090600
735 mm / 29¨	1	XFDX090700
840 mm / 33¨	1	XFDX090800
945 mm / 37¨	1	XFDX090900
1050 mm / 41¨	1	XFDX091000

Replacement signal converter for mechanical sub-assembly of the OPTIWAVE 6300 C

VFDC	4	0	**OPTIWAVE 6400 C 24 GHz radar (FMCW) level transmitter for solids from granulates to rocks (up to 16 barg (232 psig) and 130°C (266°F)**						
			Regional directives						
			1	Europe					
			2	China					
			3	USA					
			4	Canada					
			5	Brazil					
			6	Australia					
			A	Russia					
			B	Kazakhstan					
			C	Belarus					
			W	Worldwide					
				Ex approvals					
				0	Without				
				1	ATEX II 1/2 G Ex ia IIC T6…T4 Ga/Gb + II 1/2 D Ex ia IIIC T85°C…T100°C or T85°C…T130°C Da/Db				
				2	ATEX II 1/2 GD Ex db ia IIC T6…T4 Ga/Gb + II 1/2 D Ex ia tb IIIC T85°C…T100°C or T85°C…T130°C Da/Db				
				3	ATEX II 3 G Ex ic IIC T6…T4 Gc + II 3 D Ex ic IIIC T85°C…T100°C or T85°C…T130°C Dc				
				5	NEPSI Ex ia IIC T6…T4 Ga/Gb + Ex iaD 20/21 T85°C…T100°C or T85°C…T130°C IP6X				
				6	NEPSI Ex d ia IIC T6…T4 Ga/Gb + Ex iaD tD A20/A21 T85°C…T100°C or T85°C…T130°C IP6X				
				A	cQPSus IS CL I/II/III DIV 1 GP A-G + CL I Z0 AEx ia/Ex ia IIC T6…T4 Ga + Z20 AEx ia/Ex ia IIIC T85°C…T100°C or T85°C…T130°C Da				
				B	cQPSus XP-IS/DIP CL I DIV 1 GP A-G + CL I Z1 AEx db ia/Ex db ia IIC T6…T4 Gb + Z21 AEx ia tb/Ex ia tb IIIC T85°C…T100°C or T85°C…T130°C Db ①				
				C	cQPSus NI CL I/II/III DIV 2 GP A-G				
				K	IECEx Ex ia IIC T6…T4 Ga/Gb + Ex ia IIIC T85°C…T100°C or T85°C…T130°C Da/Db				
				L	IECEx Ex d ia IIC T6…T4 Ga/Gb + Ex ia tb IIIC T85°C…T100°C or T85°C…T130°C Da/Db				
				M	IECEx Ex ic IIC T6…T4 Gc				
				P	EAC Ex Ga/Gb Ex ia T6…T4 + Ex ia IIIC T85°C…T100°C or T85°C…T130°C Da/Db				
				R	EAC Ex Ga/Gb Ex d ia T6…T4 + Ex ia tb IIIC T85°C…T100°C or T85°C…T130°C Da/Db				
					0	0	**Converter version (Housing material / IP class)**		
						2	C / Compact version (aluminium housing – IP66/68 0.1 barg)		
						3	C / Compact version (stainless steel housing – IP66/68 0.1 barg) ②		
								Outputs	
								1	2-wire / 4...20mA passive HART®
								6	FOUNDATION™ fieldbus (2 wire) ③
								7	PROFIBUS PA (2 wire) ③
VFDC	4	0			0	0			**Order code (complete this code on the pages that follow)**

									Cable entry / cable gland			
									1	M20×1.5 / without		
									2	M20×1.5 / 1 × plastic + plug		
									3	M20×1.5 / 1 × nickel-plated brass + plug		
									4	M20×1.5 / 1 × stainless steel + plug		
									5	M20×1.5 / 1 × M12 (4-pin connector) + plug		
									6	M20×1.5 / 2 × plastic		
									7	M20×1.5 / 2 × nickel-plated brass		
									8	M20×1.5 / 2 × stainless steel		
									A	M20×1.5 / 2 × M12 (4-pin connector)		
									C	½ NPT nickel-plated brass adaptor / without		
									D	½ NPT nickel-plated brass adaptor / 1 × nickel-plated brass + plug		
									E	½ NPT stainless steel adaptor / 1 × stainless steel + plug		
									F	½ NPT nickel-plated brass adaptor / 2 × nickel-plated brass		
									G	½ NPT stainless steel adaptor / 2 × stainless steel		
										Display		
										0	Without (no display, cover without window)	
										4	Plug-in display (cover with window)	
											Display – Documentation language	
											1	English
											2	German
											3	French
											4	Italian
											5	Spanish
											6	Portuguese
											7	Japanese
											8	Chinese (simplified)
											A	Russian
											B	Czech
											C	Turkish
											D	Polish
VFDC	4	0			0	0						**Order code (complete this code on the pages that follow)**

												0	**Process conditions (Pressure, temperature, material and remarks) / Process seal**									
													0	Without								
													1	-1…16 barg (-14.5…232 psig) / -40°C...+130°C (-40°F…+266°F) / FKM/FPM								
													2	-1…16 barg (-14.5…232 psig) / -50°C...+130°C (-58°F…+266°F) / EPDM								
													3	-1…16 barg (-14.5…232 psig) / -20°C...+130°C (-4°F…+266°F) / Kalrez® 6375								
														0	0	0	0	0	0	0	**Accessories / Tag plate**	
																					0	Without
																					2	Adaptor for OPTIWAVE 6300 C process connection system
																					5	Weather protection + adaptor for OPTIWAVE 6300 C process connection system
																					7	Weather protection + stainless steel tag plate (18 characters) + adaptor for OPTIWAVE 6300 C process connection system
																					8	Stainless steel tag plate (18 characters max.) + adaptor for OPTIWAVE 6300 C proces connection system
VFDC	4	0			0	0						0		0	0	0	0	0	0	0		**Order code**

① DIP = Dust Ignition Proof

② This housing option has Ex ia and Ex ic approvals. The Ex d approval for this option is pending.

③ Pending

Other spare parts

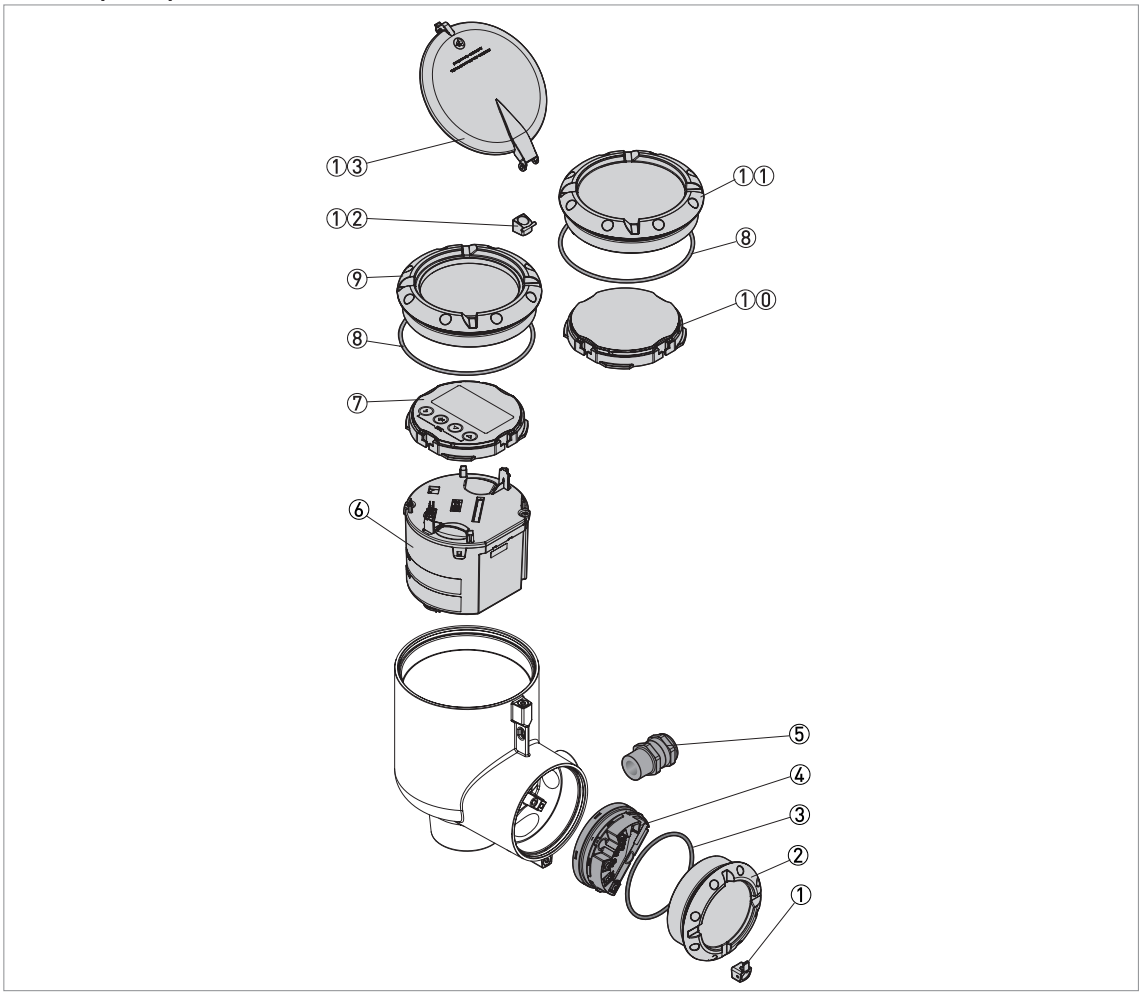

Figure 10-1: Other spare parts

① Cover stop
② Terminal compartment cover
③ Gasket for terminal compartment cover ②
④ Terminal cartridge
⑤ Cable gland
⑥ Signal converter
⑦ Display module
⑧ Gasket for display cover ⑨ or blind cover ①①
⑨ Display cover
①⓪ Dummy module
①① Blind cover
①② Hinge
①③ Plastic sun cover for display cover ⑨

Description	Quantity	Part reference
Housing		
Aluminium blind cover **(11)** + gasket **(8)** + cover stop **(1)**	1	XFDX010100
Stainless steel blind cover (11) + gasket **(8)** + cover stop **(1)**	1	XFDX010200
Aluminium display cover**(9)** + gasket **(8)**	1	XFDX010300
Stainless steel display cover **(9)** + gasket **(8)**	1	XFDX010400

Description	Quantity	Part reference
Aluminium terminal compartment cover **(2)** + gasket **(3)** + cover stop **(1)**	1	XFDX010500
Stainless steel terminal compartment cover **(2)** + gasket **(3)** + cover stop **(1)**	1	XFDX010600
Plastic sun cover for display cover **(13)** + hinge **(12)**	2	XFDX010700
O-ring gaskets set **(3)** + **(8)**	5	XFDX010800

Display

Display module **(7)**	1	XFDX020100
Display module **(7)** + aluminium display cover **(9)** + gasket **(8)**	1	XFDX020200
Display module **(7)** + stainless steel display cover **(9)** + gasket **(8)**	1	XFDX020300
Dummy module **(10)**	1	XFDX020400

Back end electronic board

Signal converter, HART® 2-wire **(6)**	1	XFDA030100

Terminal cartridge

Terminal cartridge Non-Ex (GP) or Ex i (IS) **(4)**	1	XFDX040100
Terminal cartridge Ex d (XP) **(4)**	1	XFDX040200

Cable gland / Cable entry

Cable gland / M20×1.5 Plastic black non-Ex (GP) **(5)**	10	XFDX050100
Cable gland / M20×1.5 plastic blue Ex i (IS) **(5)**	10	XFDX050200
Cable gland / M20×1.5 nickel-plated brass Ex d (XP) **(5)**	5	XFDX050300
Cable gland / M20×1.5 stainless steel Ex d (XP) **(5)**	2	XFDX050400
Cable gland / M20×1.5 nickel-plated brass non-Ex (GP) / Ex i (IS) **(5)**	5	XFDX050500
Cable gland / M20×1.5 stainless steel non-Ex (GP) / Ex i (IS) **(5)**	2	XFDX050600
Connector M12×1 (4-pin connector) **(5)**	5	XFDX050700
Cable entry / ½ NPT nickel-plated brass Ex d **(5)**	5	XFDX050800
Cable entry / ½ NPT nickel-plated brass cQPSus **(5)**	5	XFDX050900
Cable entry / ½ NPT stainless steel non-Ex (GP) / Ex i **(5)**	2	XFDX051000
Cable entry / ½ NPT stainless steel Ex d **(5)**	2	XFDX051100
Cable entry / ½ NPT stainless steel cQPSus **(5)**	2	XFDX051200

10.3 Accessories: general items

We supply accessories for this device. When you send an order for accessories, please give the reference numbers that follow:

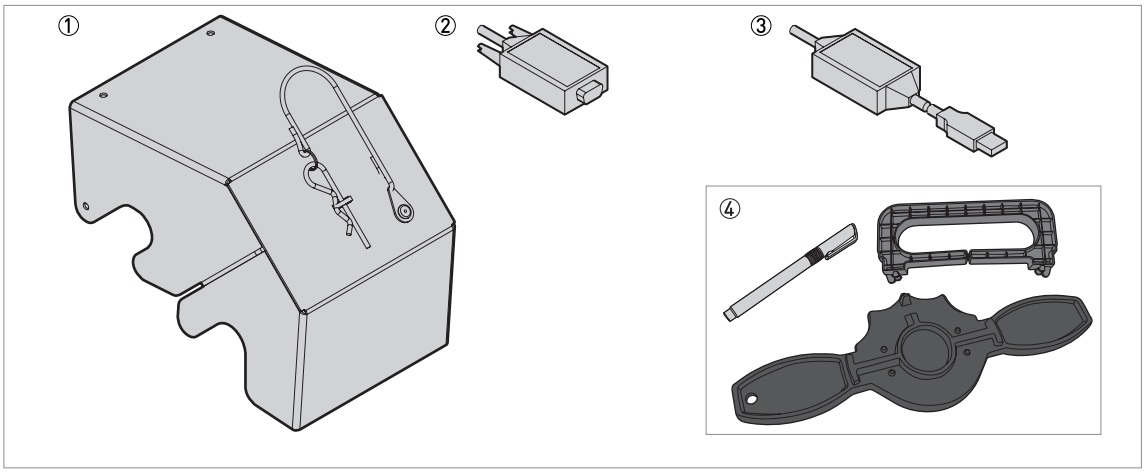

Figure 10-2: Accessories: general items

① Weather protection
② Viator RS232 / HART converter
③ Viator USB / HART converter
④ Display extractor, magnet and cover wrench

Item	Description	Quantity	Part reference
①	Weather protection	1	XFDX060100
②	Viator RS232 / HART converter	1	XFDX060200
③	Viator USB / HART converter	1	XFDX060300
④	Display extractor, magnet and cover wrench	5	XFDX060400
—	USB / 24 V DC power supply	1	XFDX060500

10.4 Accessories: process connection kits

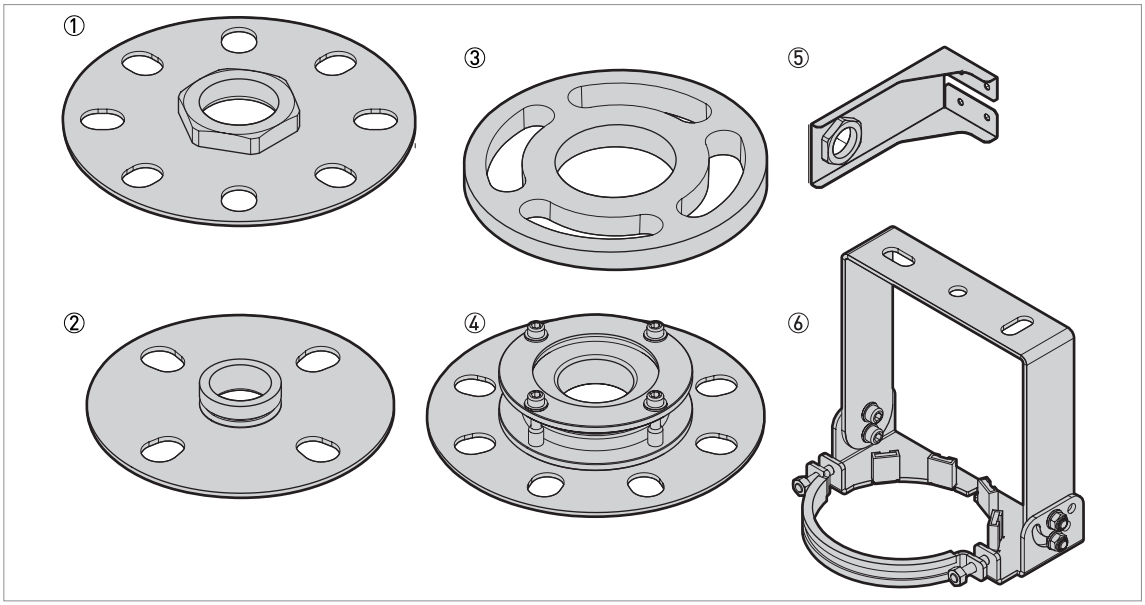

Figure 10-3: Accessories: process connection kits

① 316L low-pressure flange disc for G (ISO 228) thread connection on level transmitter
② 316L low-pressure flange disc for NPT (ASME B1.20.1) thread connection on level transmitter
③ PP or PTFE 2° slanted flange
④ Orientation system (max. tilt 30°) with 316L low pressure flange disc (atmospheric pressure)
⑤ 316L wall-mounted bracket for G 1½ or 1½ NPT process connection on level transmitter
⑥ 316L hanging, orientable bracket (max. tilt 45°)

Item	Description	Quantity	Part reference
316L low-pressure flange disc (max. 1 barg at +20°C) for G 1 process connection on level transmitter			
①	Disc with holes, drilled according to DN50 PN2.5...PN40 / 2¨ 150 lb	1	XF70000015
	Disc with bolt holes, drilled according to DN80 PN2.5...PN40 / 3¨ 150 lb		XF70000016
	Disc with holes, drilled according to DN100 PN2.5...PN40 / 4¨ 150 lb		XF70000017
	Disc with holes, drilled according to DN150 PN2.5...PN40 / 6¨ 150 lb		XF70000018
	Disc with holes, drilled according to DN200 PN2.5...PN40 / 8¨ 150 lb		XF70000019
316L low-pressure flange disc (max. 14.5 psig at +68°F) for 1 NPT process connection on level transmitter			
②	Disc with holes, drilled according to DN50 PN2.5...PN40 / 2¨ 150 lb	1	XF70000N15
	Disc with holes, drilled according to DN80 PN2.5...PN40 / 3¨ 150 lb		XF70000N16
	Disc with holes, drilled according to DN100 PN2.5...PN40 / 4¨ 150 lb		XF70000N17
	Disc with holes, drilled according to DN150 PN2.5...PN40 / 6¨ 150 lb		XF70000N18
	Disc with holes, drilled according to DN200 PN2.5...PN40 / 8¨ 150 lb		XF70000N19

Item	Description	Quantity	Part reference

316L low-pressure flange disc (max. 1 barg at +20°C) for G 1½ process connection on level transmitter

①	Disc with holes, drilled according to DN80 PN2.5...PN40 / 3¨ 150 lb	1	XF70000010
	Disc with holes, drilled according to DN100 PN2.5...PN40 / 4¨ 150 lb		XF70000011
	Disc with holes, drilled according to DN150 PN2.5...PN40 / 6¨ 150 lb		XF70000013
	Disc with holes, drilled according to DN200 PN2.5...PN40 / 8¨ 150 lb		XF70000014

316L low-pressure flange disc (max. 14.5 psig at +68°F) for 1½ NPT process connection on level transmitter

②	Disc with holes, drilled according to DN80 PN2.5...PN40 / 3¨ 150 lb	1	XF70000N10
	Disc with holes, drilled according to DN100 PN2.5...PN40 / 4¨ 150 lb		XF70000N11
	Disc with holes, drilled according to DN150 PN2.5...PN40 / 6¨ 150 lb		XF70000N13
	Disc with holes, drilled according to DN200 PN2.5...PN40 / 8¨ 150 lb		XF70000N14

2° slanted flange (EN 1092-1)

③	DN80 PN40, PP (max. +100°C / +212°F) ①	1	XF70000023
	DN80 PN40, PTFE (max. +150°C / +392°F) ①		XF70000028
	DN100 PN16, PP (max. +100°C / +212°F) ①		XF70000024
	DN100 PN16, PTFE (max. +150°C / +392°F) ①		XF70000029
	DN100 PN40, PP (max. +100°C / +212°F)		XF70000025
	DN150 PN16, PP (max. +100°C / +212°F) ①		XF70000026
	DN150 PN40, PP (max. +100°C / +212°F) ①		XF70000027

2° slanted flange (ASME B16.5)

③	3¨ 150 lb, PP (max. +100°C / +212°F) ①	1	XF70000035
	3¨ 300 lb, PP (max. +100°C / +212°F) ①		XF70000036
	4¨ 150 lb, PP (max. +100°C / +212°F) ①		XF70000037
	4¨ 300 lb, PP (max. +100°C / +212°F) ①		XF70000038
	6¨ 150 lb, PP (max. +100°C / +212°F) ①		XF70000039
	6¨ 300 lb, PP (max. +100°C / +212°F) ①		XF70000040
	8¨ 150 lb, PP (max. +100°C / +212°F) ①		XF70000041

2° slanted flange (JIS B2220)

③	80A 10K, PP (max. +100°C / +212°F) ①	1	XF70000053
	100A 10K, PP (max. +100°C / +212°F) ①		XF70000054

Orientation system (max. tilt 30°) with 316L low-pressure flange disc (atmospheric pressure) for G 1½ process connection on level transmitter

④	Disc with holes, drilled according to DN80 PN2.5...PN40 / 3¨ 150 lb	1	XF70000061
	Disc with holes, drilled according to DN100 PN2.5...PN40 / 4¨ 150 lb		XF70000062
	Disc with holes, drilled according to DN150 PN2.5...PN40 / 6¨ 150 lb		XF70000063
	Disc with holes, drilled according to DN200 PN2.5...PN40 / 8¨ 150 lb		XF70000064

Item	Description	Quantity	Part reference

Orientation system (max. tilt 30°) with 316L low-pressure flange disc (atmospheric pressure) for 1½ NPT process connection on level transmitter

④	Disc with holes, drilled according to DN80 PN2.5...PN40 / 3¨ 150 lb	1	XF70000N61
	Disc with holes, drilled according to DN100 PN2.5...PN40 / 4¨ 150 lb		XF70000N62
	Disc with holes, drilled according to DN150 PN2.5...PN40 / 6¨ 150 lb		XF70000N63
	Disc with holes, drilled according to DN200 PN2.5...PN40 / 8¨ 150 lb		XF70000N64

Other accessories for process connections

⑤	316L wall-mounted bracket for G 1½ process connection on level transmitter ②	1	XF70000059
⑥	316L hanging, orientable bracket (max. tilt 45°)	1	XF70000067

① Make sure that the slanted flange is made of the same material as the Drop antenna

② For more data, refer to the "Technical data: Dimensions and weights" section in this document

10.5 Glossary

D

Dielectric constant
An electrical property of the product to be measured used in radar measurement. Also known as εr, DK and relative permittivity. Defines the strength of the wave reflected back to the device's signal converter.

Direct Plus
Direct Plus mode is an alternative measurement mode. If it is possible there will be an interference signal in the measurement zone that is larger than the level signal, select "Direct Plus" mode. If you select "Direct Plus" mode, the device locks on the level signal and monitors changes in level. If the device then finds larger reflections in the silo, it will only monitor the largest signal in a small search zone around the first reflection found and ignore all other reflections. The interference signal must not be near to the level signal.

Distance
The distance from the face of flange to the level (1 product) or the surface of the top product (2 or more products). See the diagrams at the end of this section.

Drop antenna
A new generation of antenna made of PP or PTFE. It has an ellipsoidal shape for a more precise emission of radar signals.

DTM
Device Type Manager. A driver for use in the PACTware™ program. All data and functions of the device are included in it.

E

Electromagnetic compatibility (EMC)
Defines how much a device influences or is influenced by other devices that generate electromagnetic fields during operation. Refer to European standard EN 61326-1 for further details.

F

FMCW
Frequency-modulated continuous-wave radar technology. The signal is continuously present, but the frequency is modulated, usually in successive linear ramps over time (frequency sweeps).

H

Hazardous area
An area with a potentially explosive atmosphere. Trained personnel can install and use a device in this area. The device must be ordered with the appropriate options. The device requires approvals (ATEX, IECEx, cQPSus, NEPSI etc.) related to site specifications. You can find more data about hazardous areas in the Ex Manuals and Ex Certificates of Compliance.

Horn (cone) antenna
A common antenna for most applications. It is used for the controlled emission and collection of radar signals.

I

Interference signals
False radar reflections usually caused by equipment in the tank.

L

Level
Height from the bottom of the silo (user-defined) to the surface of the top product (Tank height – distance). See the diagrams at the end of this section.

M

Mass
Total mass of silo contents.

P

PACTware™
Software that operates and configures field devices from a remote workstation. It is not necessary to use fieldbus software or programs developed by the manufacturer.

R

Radar reflection
Signal reflected from the surface of the silo contents.

S

Signal converter
A set of electronic components in the device that send the measurement signal through some signal filters. They identify and measure the level of the silo contents.

U

Ullage volume
Unfilled volume. See the diagrams at the end of this section.

V

Volume
Total volume of silo contents.

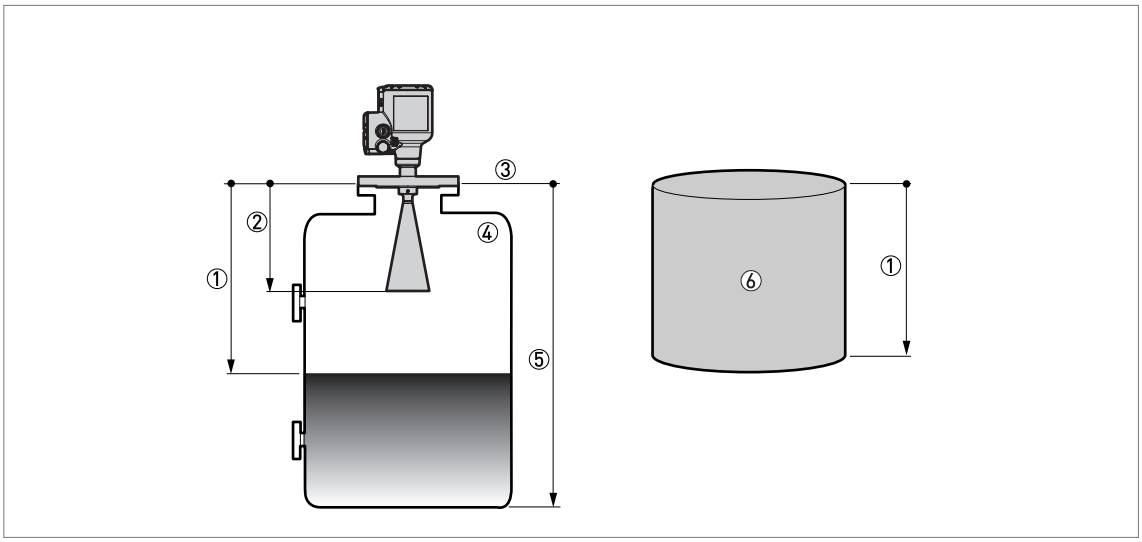

Figure 10-4: Measurement definitions: distance

① Distance
② Blocking distance
③ Flange facing
④ Gas (Air)
⑤ Tank height
⑥ Ullage volume or mass

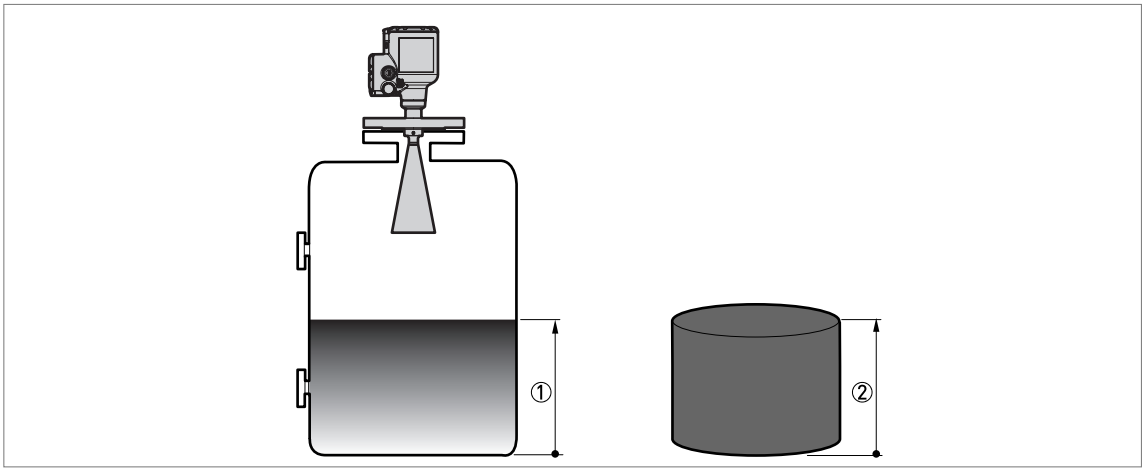

Figure 10-5: Measurement definitions: level

① Level
② Volume or mass

KROHNE – Process instrumentation and measurement solutions

- Flow
- Level
- Temperature
- Pressure
- Process Analysis
- Services

Head Office KROHNE Messtechnik GmbH
Ludwig-Krohne-Str. 5
47058 Duisburg (Germany)
Tel.: +49 203 301 0
Fax: +49 203 301 10389
info@krohne.com

The current list of all KROHNE contacts and addresses can be found at:
www.krohne.com

© KROHNE 02/2019 - 4005813902 - MA OPTIWAVE 6400 R02 en - Subject to change without notice.