Kidde Fire Systems

High Pressure Carbon Dioxide Fire Suppression System

Effective: October 2024
K-81-1000 Rev AA

Kidde Fire Systems High Pressure Carbon Dioxide ($HPCO_2$) fire suppression system is the ideal fire suppression solution for heavy and light industrial applications where unoccupied spaces or assets need protection, where CO_2 is an acceptable agent and other agents would be cost prohibitive, and where in addition to the primary total flooding design, a local application system may be required. CO_2 agent is stored in seamless steel cylinders as a liquid under its own vapor pressure and at ambient temperature.

FEATURES

Environmentally safe

- CO_2 is naturally occurring gas
- Global Warming Potential (GWP) of One (1)
- Ozone Depletion Potential (ODP) of Zero (0)

Since CO_2 is a gas, it can penetrate and spread to all parts of the protected area. As a gas or as a finely divided solid called 'snow' or 'dry ice', CO_2 will not conduct electricity and therefore, can be used on energized electrical equipment. CO_2 also leaves no residue, thus eliminating cleanup of the agent itself. Additionally, CO_2 is low-cost, therefore can be used on deep-seated fires and oils, fats and greases where larger agent quantities are required. CO_2 Suppression system is the only clean agent system that can be used for deep seated fires.

A sampling of industries using Cardox $LPCO_2$ include:

- Manufacturing
  - Automotive Plants
  - Cement Plants
  - Industrial Food Fryers
- Power Generation
  - Turbine Enclosures
  - Coal Handling Systems
  - Fume Handling Systems
  - High Voltage Switchgear
- Metals
  - Rolling Mills
  - Metal Processing
- Other Industries
  - Printing Presses
  - Flammable Materials Storage
- Marine Applications
  - Engine Rooms
  - Electrical Rooms
  - Paint Vaults

A choice of hardware profiles to suit various application types and requirements:

- Cylinder Sizes:
  - Small: 25, 35, lb.
  - Medium: 50, 75 lb.
  - Large: 100, 123* lb.

Note *: Availability to be announced.

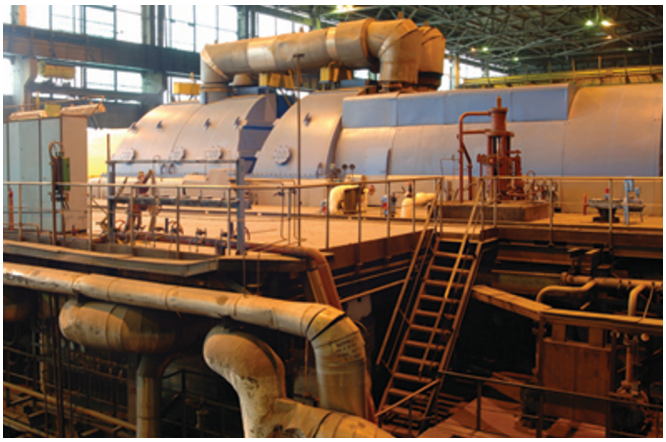

- Cylinder Orientation
  - 25, 35. & 50 lb.: Mounted horizontally or vertically (Bent Siphon Tube), Valve size: 1/2"
  - 75, 100, & 123 lb.: Mounted vertically, Valve size 5/8"
- System Actuation:
  - Primary: By Control Heads
  - Secondary: By back-pressure without additional hardware
- Stop (Directional) Valve. Sizes Offered: 1/2" to 4"
- Lockout Valve. Sizes Offered: 1/4" to 4"
- Nozzle Types Offered: S & Flanged S, M, V & Flanged V, and L
- Safety Accessories for Occupiable Areas:
  - Mechanical Discharge Delay
  - Pressure Operated Siren
  - Signage for various types

Wide operating temperature

- Range of -10 to 130 °F (-23 to 54 °C) allows extreme installation environments.

Specify with confidence!

- UL Listed
- FM Approved
- USCG Approved

Suppression System Configuration

$HPCO_2$ systems may be configured for total flooding, local application, or both.

Total Flooding: In a total flooding system, a predetermined amount of CO_2 is discharged through fixed piping and nozzles into an enclosed space or enclosure around the hazard. Total flooding is applicable when the hazard is totally enclosed and when all openings surrounding the hazard can be closed automatically prior to or at the start of system discharge. If all the openings cannot be closed, additional CO_2 must be provided to compensate for agent loss through these openings during the discharge and appropriate concentration retention periods. The CO_2 concentration must be maintained for a sufficient period of time to allow the fuel and any other surfaces or equipment in contact with the fuel to cool below the ignition temperature of the combustibles.

Local Application: Local application systems differ from total flooding in that the nozzles are arranged to discharge directly onto the fire. One of the principal uses of local- application systems is to protect open tanks containing flammable liquids, but this technique can be generalized to protect three-dimensional hazards such as paint spray booths and printing presses.

CO_2 systems can also consist of hand hose lines permanently connected by means of fixed piping to a fixed supply of suppression agent. These systems are frequently provided for manual protection of small, localized equipment. Although not a substitute for a fixed system, a hose line can be used to supplement a fixed system where the hazard is accessible for manual firefighting.

Cylinder and Valve Assemblies

The agent cylinders are steel and equipped with a forged brass valve assembly which contains a safety disc device for protection against over pressurization due to elevated temperatures. Each valve is equipped with a side port that serves both as a fill connection and as a control port for attachment of a variety of Kidde Fire Systems control heads.

The threaded connection on the top of each valve mates with a discharge head to allow agent release and distribution into the system piping.

High pressure CO_2 hardware has been in service for more than 50 years. The hardware is time-tested and has gained the trust of our customers and end users.

WARNING

Cylinders are shipped from the factory with a protection cap installed that prevents impacts and damage to the valve during the transportation.

Cylinder Rack and Framing, Example Arrangement

Single and double mounting straps are available for all cylinder sizes. However to provide flexibility of installation for three or more cylinders, three different styles of framing arrangements available:

Arrangement A

This style (Figure 1) is used for a single row of cylinders, that can be either wall mounted or free standing.

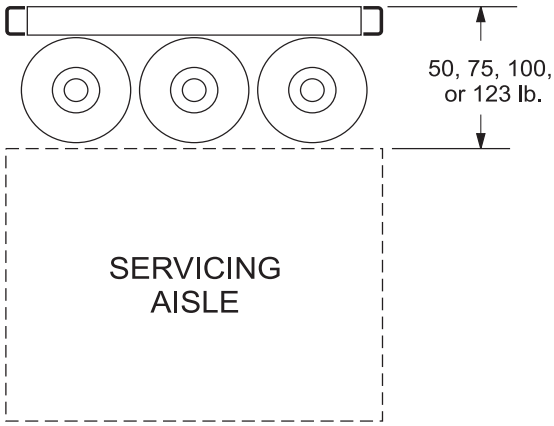

Figure 1. Multiple Cylinder Mounting, Arrangement A

Arrangement B

This style (Figure 2) provides for one row of cylinders on each side of the framing. This arrangement is free standing and requires two aisles. It has the advantage of permitting free access to any cylinder without disturbing any other cylinder.

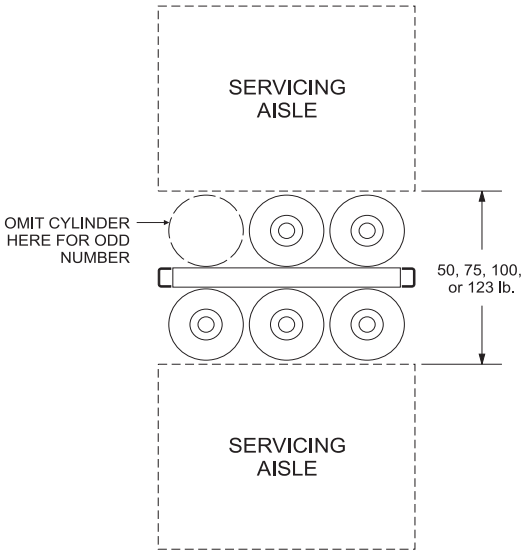

Figure 2. Multiple Cylinder Mounting, Arrangement B

Arrangement C:

This style (Figure 3) provides for a double row of cylinders on the same side of the framing. This arrangement can be free standing or wall mounted. It is generally used when the cylinders are to be wall mounted and sufficient space is not available to arrange them in a single row.

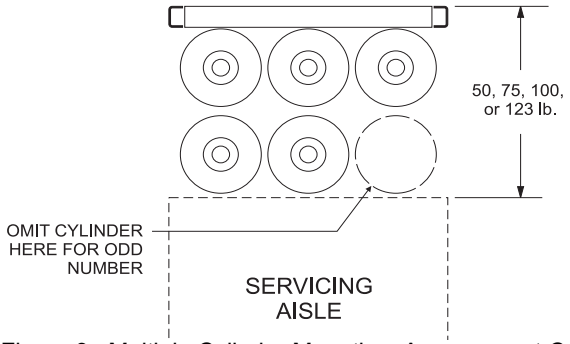

Figure 3. Multiple Cylinder Mounting, Arrangement C

Larger quantities of cylinders can be accommodated by adding additional framing. All framing is supplied with pre-drilled mounting holes. Any combination of cylinder stowage, junction box installation, pneumatic selector valve installation and cylinder manifold support can be accommodated by the holes in the framing. All bolts and nuts are supplied as part of the framing. Drilling is not required at the job site in order to erect the bracketing. In addition the cylinder manifolds are arranged to be fastened to the framing.

Discharge Manifold

$HPCO_2$ Agent cylinders can be manifolded together as an End, Center, or H setup, with additional options for a for connected Main and Reserve systems.

Figure 4. Typical Manifold Layout

Discharge Heads

Each cylinder and valve assembly must be equipped with a discharge head at installation to actuate the cylinder valve. The discharge head is assembled to the top of the cylinder valve and contains a spring-loaded piston which when actuated by CO_2 pressure is designed to depress the main check in the valve and discharge the contents of the cylinder. The piston provides the necessary mechanical advantage to open the valve's main check. The discharge outlet is designed to mate with a flexible hose or swivel adapter for connection to the distribution piping. The discharge head also contains an integral stop check whose function is to automatically prevent the loss of CO_2 during system discharge in the event that a cylinder is removed from the distribution piping. Two different style discharge heads are available:

Table 1: Discharge Heads

Plain-nut	Grooved-nut
• Discharges upon activation of its associated control head or upon application of pressure entering through the outlet • Used on each cylinder of a multiple-cylinder system • Datasheet K-81-1060	• Can only be actuated by a control head. Pressure entering the outlet will not actuate the cylinder • Used for single-cylinder, or connected single cylinder main and reserve systems • Datasheet K-81-1070

Discharge Hoses

Flexible discharge hoses are used to provide the interconnection between the discharge head and the distribution manifold or piping. The hoses are made of wire-reinforced rubber.

A 1/2 in. flexible discharge hose is used with the 25, 35, and 50 lb cylinders. The 3/4 in hose is used with the 75, 100, and 123 lb cylinders.

Figure 5. Discharge Hose

Stop (Directional) Valves

Stop (Directional) valves allow cost-effective protection for facilities with several assets requiring protection. Stop valves find two primary applications in CO_2 systems. The first application is in multi-hazard systems which share a common CO_2 suppression system. Stop valves are used to route the CO_2 from the shared supply to the individual areas or equipment being protected.

The second application for these valves is as a life safety device to prevent the accidental discharge of CO_2 into a normally occupied area. The stop valve prevents the flow of CO_2 until the attached control head is operated.

All Kidde Fire Systems Stop valves operate on a differential-pressure principle, using the pressure of the discharging CO_2 to open the stop check and allow flow through the valve. All valves automatically reset (close) after discharge is completed.

Stop valves are available in sizes ranging from 1/2 to 4 in. diameter.

For more information, see K-81-5130.

Lockout Valves

A lockout valve is a manually operated valve installed between the CO_2 manifold and the discharge pipe to the protected area. The lockout valve can be locked in the closed position to prevent CO_2 from discharging into the protected area. The lockout valve shall be installed at the end of the CO_2 manifold or, if a common manifold protects multiple hazards, after each selector valve.

The lockout valve consists of a carbon steel or stainless steel valve with threaded ends. Either valve style can be provided with or without limit switches. Lockout valves are available in sizes ranging from 1/4 to 4 in. diameter.

Figure 7. Lockout Valves with Lock

The lockout valve without limit switches is available in sizes 1/4” through 2”. The lockout valve with 2 SPDT limit switches and indicator is available in sizes 1/4” through 2”. The lockout valve with 2 SPDT explosion proof limit switches and indicator is available in sizes 1/4” through 2”. For more information, see K-81-1300, K-81-1310, and K-81-1320.

Discharge Nozzles

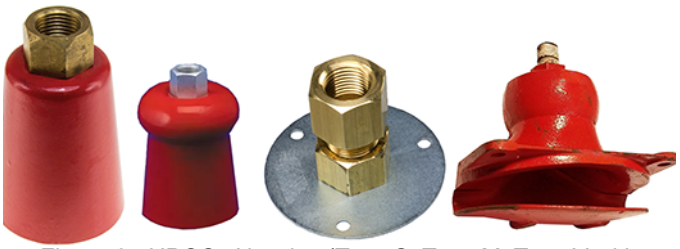

Figure 8. $HPCO_2$ Nozzles (Type S, Type M, Type V with Flange, and Type L)

Discharge nozzles control the distribution of CO_2 into the protected area for total flooding or onto the protected equipment for local application. These discharge nozzles are designed to provide the proper combination of flow rate and discharge pattern to protect vital equipment. See Table 3 for more information on nozzle styles and applications.

Discharge nozzles are marked to identify the nozzle and show the nozzle's equivalent single orifice diameter. The equivalent diameter refers to the orifice diameter of a "standard" single orifice type nozzle having the same flow rate as the discharge nozzle.

Strainers are provided with nozzles having smaller orifice sizes to prevent foreign objects in the pipe from clogging the nozzle orifice.

A Flange Mounting kit is available for Type S Multijet and the Type V Vent nozzles.

Table 3. Nozzle Styles

Nozzle Type	Application	Nominal Spray Pattern
Multijet Type S	Total Flood -or- Local Application Rate by Volume	Cone
Multijet Type S, Flange		
Multijet Type S, Coated		
Multijet Type M		
Vent Type V	Total Flood	Jet
Multijet Type L	Local Application Rate by Area	180° Fan

Note: See flow calculation report for nozzle part numbers and drill codes.

Multijet Nozzle, Type S

The type S multijet nozzles have a female 1/2 in. NPT inlet connection for attaching to the distribution piping. The basic type S nozzle has a red painted cold-rolled steel body. A flanged type S nozzle and flanged mounting kit are also available for placing the nozzle on the exterior of a duct or enclosure. The flanged mounting kit includes a frangible disc which ruptures upon discharge. The flanged nozzle and mounting kit may be used to prevent particulate and liquid matter from clogging the orifices. The flanged nozzle body is painted red.

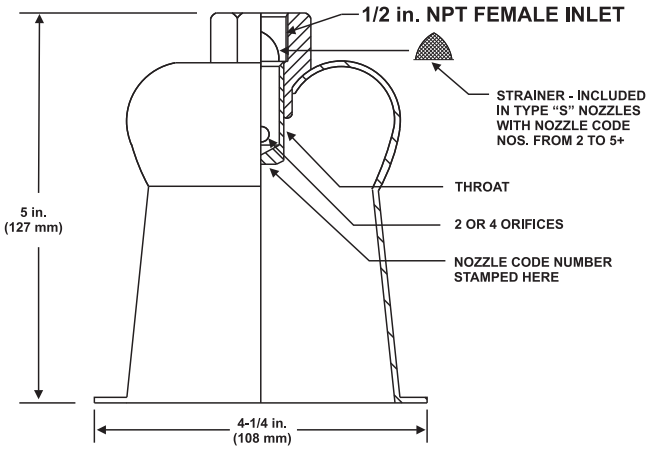

Figure 9. Multijet Nozzle, Type S Flanged

For more information, see K-81-1130 and K-81-1170.

Multijet Nozzle, Type M

The type M multijet nozzle is similar in design and operation to the type S multijet nozzle, and is used for applications requiring higher flow rates than those attainable with the type S nozzle. The nozzle body is longer than the type S body in order to accommodate the higher flow rates. The type M nozzle has a red painted, cold-rolled steel body and a 3/4 in. NPT inlet connection for attaching to the CO_2 distribution piping.

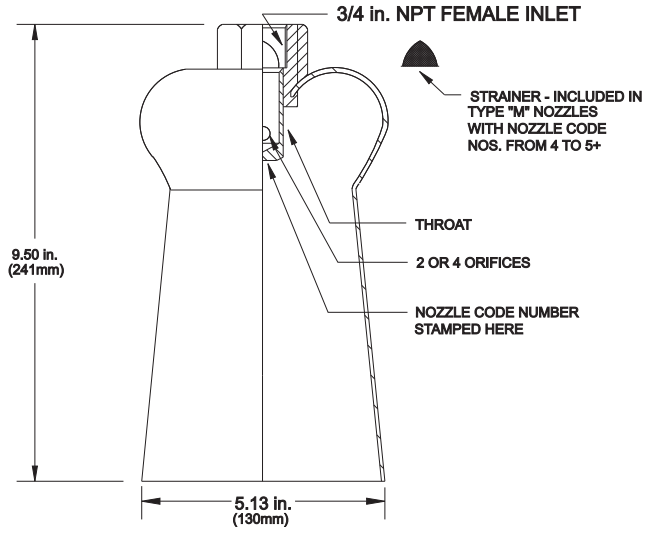

Figure 10. Multijet Nozzle, Type M

For more information, see K-81-1150 and K-81-1170.

Vent Nozzle, Type V

The type V vent nozzle is a single-orifice nozzle used to discharge a jet of CO_2 into an enclosure such as a duct. The type V nozzles are only used for total flooding applications.

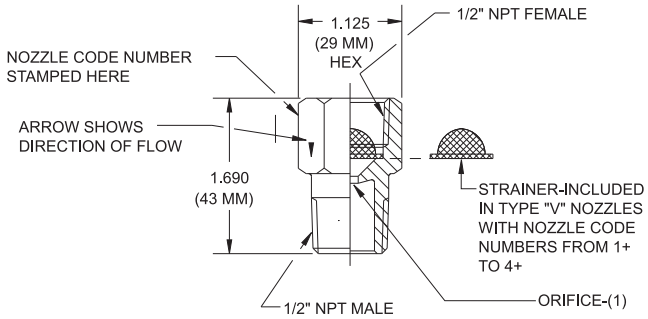

Figure 11. Vent Nozzle, Type V

For more information, see K-81-1110, K-81-1120, and K-81-1170.

Multijet Nozzle, Type L

The type L multijet nozzle has a 1/2-inch NPT female connection for attaching to the CO_2 distribution piping. The discharge produces a 180° flat fan pattern that is highly effective for protection of dip tanks, drain boards and similar two dimensional hazards. The nozzle is attached to the side of a tank and offers no obstruction to overhead trolleys or dipping operations.

The type L nozzles are only used for local application systems.

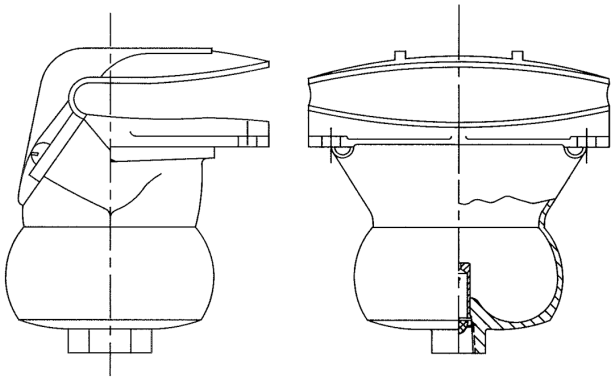

Figure 12. Multijet Nozzle, Type L

Hand Hose Line Systems

A Hand Hose Line System consists of a hose reel or rack, hose, and a discharge nozzle assembly connected by fixed piping to a supply of CO_2.

Hand hose line systems may be used to supplement fixed fire protection systems or to supplement first response portable fire extinguishers for the protection of specific hazards for which CO_2 is a suitable extinguishing agent. These systems shall not be used as a substitute for other fixed CO_2 fire-extinguishing systems equipped with fixed nozzles, except where the hazard cannot adequately or economically be protected by a fixed system. The decision as to whether hose lines are applicable to the particular hazard shall rest with the authority having jurisdiction.

Hand hose line systems shall be placed such that they are easily accessible and that the hose length is adequate to reach the most distant hazard. In general, they should not be located where they will be exposed to the hazard, nor shall they be located inside any hazard area protected by a total flooding system.

If multiple hose stations are used, they shall be spaced so that one or more hose lines can cover any area within the hazard.

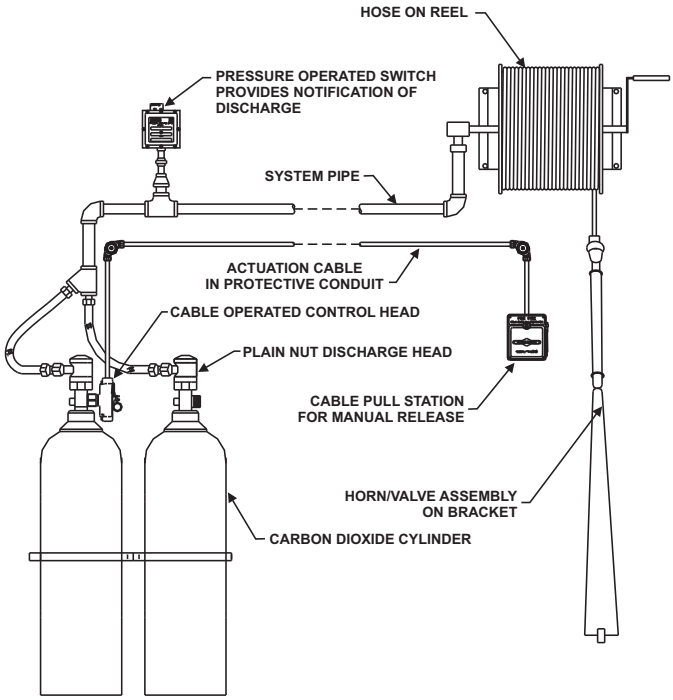

Figure 13. Typical Hand Hose Line System with Reel

PRESSURE OPERATED SIRENS

The Pressure Operated Sirens are used as audible alarms in and outside the hazard, warning those in the area to evacuate. These units discharges CO_2 when operated.

Note: When the CO_2 discharge occurs outside the hazard, the discharge does not contribute to a firefighting concentration and the total system agent quantity must be compensated to account for the CO_2 discharged by the siren.

Figure 14. Pressure Operated Siren

DISCHARGE DELAY DEVICES

Discharge delay devices are designed to delay the discharge of CO_2 for an appropriate period of time to allow for an orderly and safe evacuation from the protected area. Discharge delays also provide a time interval for equipment to shutdown and auxiliary interlocks to engage prior to the agent discharge. Discharge delays are used to control the length of the pre-discharge warning period by holding back the actuation of a stop valve which prevents flow of CO_2 into the hazard area. Discharge delays can use either the CO_2 agent or a Nitrogen pilot cylinder to operate.

Figure 15. Discharge Delay

For more information, see datasheets K-81-5210 and K-85-9130.

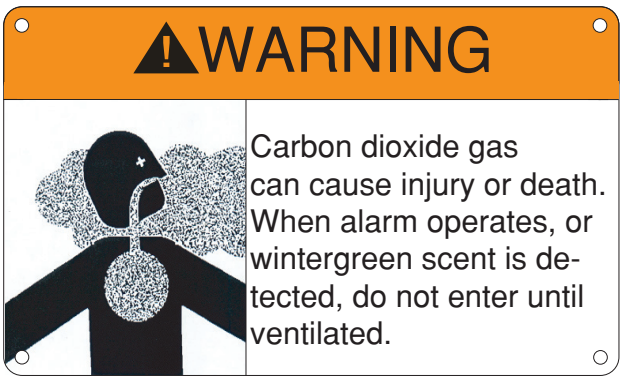

Figure 23. Sign at Every Entrance to Protected Space for Systems Provided with a Wintergreen Odorizer

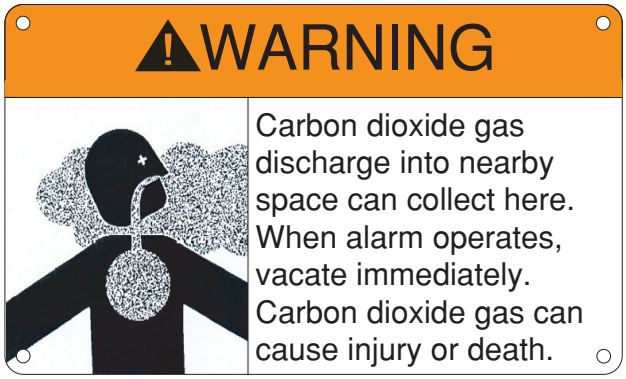

Figure 24. Sign in Every Nearby Space Where CO_2 Can Accumulate to Hazardous Levels

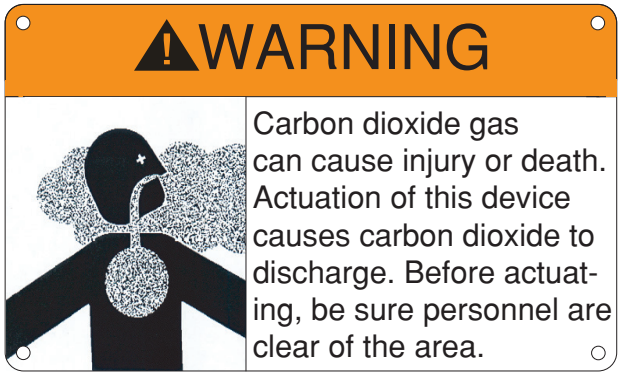

Figure 25. Sign at Each Manual Actuation Station

For more information, see datasheet K-81-9171.

POST DISCHARGE CLEANUP

CO2 can be lethal at certain concentrations. For the safety of the personnel after a discharge, ensure all air-exchanging equipment is turned back on and all areas to where the agent was discharged or where the discharged agent could migrate, should be thoroughly ventilated and purged with fresh air.

Kidde Fire Systems, Kidde Fire Protection and Fenwal Controls branded products are created exclusively by Kidde-Fenwal, LLC, 400 Main St, Ashland, MA 01721, USA
All trademarks are the property of their respective owners.

This literature is provided for informational purposes only. Kidde-Fenwal, LLC believes this data to be accurate, but it is published and presented without any guarantee or warranty whatsoever. Kidde-Fenwal, LLC assumes no responsibility for the product's suitability for a particular application. The fire suppression system design, installation, maintenance, service and troubleshooting must be performed by trained, authorized Kidde Fire Systems distributors for the product to work correctly. If you need more information on this product, or if you have a particular problem or question, contact: Kidde-Fenwal, LLC, Ashland, MA 01721 USA, Telephone: (508) 881-2000.

©2024 Kidde-Fenwal, LLC

EXPORT INFORMATION (USA)
Jurisdiction: EAR
Classification: EAR99
This document contains technical data subject to the EAR.

Kidde-Fenwal, LLC
400 Main Street
Ashland, MA 01721
Ph: 508.881.2000
Fax: 508.881.8920
kiddefiresystems.com