JUMO GmbH & Co. KG
Delivery address: Mackenrodtstraße 14
36039 Fulda, Germany
Postal address: 36035 Fulda, Germany
Phone: +49 661 6003-0
Fax: +49 661 6003-607
Email: mail@jumo.net
Internet: www.jumo.net

JUMO UK LTD
JUMO House
Temple Bank, Riverway
Harlow, Essex, CM20 2DY, UK
Phone: +44 1279 63 55 33
Fax: +44 1279 62 50 29
Email: info.uk@jumo.net
Internet: www.jumo.co.uk

JUMO Process Control, Inc.
6724 Joy Road
East Syracuse, NY 13057, USA
Phone: +1 315 437 5866
Fax: +1 315 437 5860
Email: info.us@jumo.net
Internet: www.jumousa.com

JUMO heatTHERM-AT/-DR

with single-pole snap switch

Special features

- PUSH IN-connection technology - **reduced installation time by 50 %**
- Stable switching point position due to ambient temperature compensation (standard)
- Max. switching capacity 16 A, 230 V
- Tested according to DIN EN 14597
- Operating life at least 250,000 switching cycles for TR and TW
- Switching point deviation during the entire operating life of up to ±5 %
- Protection type max. IP54
- UL approval (extra code 061)

Type 603070/0170 (TR/STB)

Description

High application flexibility and the latest connection technology are the essential equipment features of this new thermostat series.

The thermostat case is suitable for all common installation types such as wall mounting, immersion sleeve, and contact fastening. It can be used universally and reduces the variant range because different mounting types must no longer be taken into account.

The JUMO heatTHERM-DR (type 7 + 8) type is a specific variation with a special housing bottom section for DIN rail or wall mounting. As a result, easy mounting on mounting rails TH35 according to DIN EN 60715 (e.g. in control cabinets) is possible.
This variant considerably reduces the mounting time. The flue gas automatic reset temperature limiter JUMO heatTHERM-AT locks the gas/oil vessel that is connected in parallel with the wood vessel to a chimney.

For these international innovative surface-mounted thermostats with PUSH IN terminal technology, the connection wires are only inserted into the terminal point up to the stop - that's it! No tool is required for connecting the wire or strand with a ferrule and the wiring becomes safer. In this manner, the costs and time required for connection are considerably reduced compared to the conventional screw terminal.

The PUSH IN terminal technology allows direct switching of loads up to 16 A at AC 230 V. The installation costs can be reduced further because a load contactor is no longer required.

Available are temperature controllers (TR), temperature monitors (TW), safety temperature monitors (STW), safety temperature limiters (STB) as single or double thermostats, and flue gas temperature monitors (ATW).

Approvals according to DIN EN 14597, DGRL, and UL indicate the high quality standards for this product series.

Type 603070/0001 (TR)

Type 603070/0002 (TW)

Type 603070/0002 (TW)

JUMO GmbH & Co. KG
Delivery address: Mackenrodtstraße 14
36039 Fulda, Germany
Postal address: 36035 Fulda, Germany
Phone: +49 661 6003-0
Fax: +49 661 6003-607
Email: mail@jumo.net
Internet: www.jumo.net

JUMO UK LTD
JUMO House
Temple Bank, Riverway
Harlow, Essex, CM20 2DY, UK
Phone: +44 1279 63 55 33
Fax: +44 1279 62 50 29
Email: info.uk@jumo.net
Internet: www.jumo.co.uk

JUMO Process Control, Inc.
6724 Joy Road
East Syracuse, NY 13057, USA
Phone: +1 315 437 5866
Fax: +1 315 437 5860
Email: info.us@jumo.net
Internet: www.jumousa.com

Approval marks and certificates

	Designation	DIN
	Testing agency	DIN CERTCO
	Certificates/certification numbers	TR1191
	Inspection basis	DIN EN 14597
	Valid for	Type 603070/0001 (TR), Type 603070/0120 (TR), Type 603070/0170 (TR)
	Designation	DIN
	Testing agency	DIN CERTCO
	Certificates/certification numbers	TW1192
	Inspection basis	DIN EN 14597
	Valid for	Type 603070/0002 (TW), Type 603070/0202 (TW)
	Designation	DIN
	Testing agency	DIN CERTCO
	Certificates/certification numbers	STW(STB)1193
	Inspection basis	DIN EN 14597
	Valid for	Type 603070/0020 (STW), Type 603070/0070 (STB), Type 603070/0120 (STW), Type 603070/0170 (STB)
	Designation	DIN
	Testing agency	DIN CERTCO
	Certificates/certification numbers	STB1194
	Inspection basis	DIN EN 14597
	Valid for	Type 603070/0070 (ATW)
	Designation	DIN
	Testing agency	DIN CERTCO
	Certificates/certification numbers	ASTB1217
	Inspection basis	DIN EN ISO 14597
	Valid for	Type 603070/0070 (STB); only available with process connections 35 or 80
	Designation	DIN
	Testing agency	DIN CERTCO
	Certificates/certification numbers	ATW1218
	Inspection basis	DIN EN ISO 13849-1
	Valid for	Type 603070/0020 (ATW)
	Designation	B10d
	Testing agency	TÜV SÜD
	Certificates/certification numbers	C-T 1355-03/11[a]
	Inspection basis	DIN EN 14597, DIN EN ISO 13849-1, draft DIN EN 13611 A2
	Valid for	Type 603070/0... (...)
	Designation	UL
	Testing agency	UL
	Certificates/certification numbers	E66358
	Inspection basis	UL 873, C22.2 No. 24-1993
	Valid for	Type 603070/0... (...)
	Designation	PED
	Testing agency	TÜV Süd
	Certificates/certification numbers	Z-IS-TAF-MUC-18-05-2652099-02162623
	Inspection basis	2014/68/EU, DIN EN 14597
	Valid for	Type 603070/0020 (STW), Type 603070/0070 (STB), Type 603070/0120 (STW), Type 603070/0170 (STB)

[a] For further details see Safety manual JUMO heatTHERM (-AT), (-DR) 602031, 603070. Switching capacity check implemented at 16 A, 230 V, ohmic load.

JUMO GmbH & Co. KG
Delivery address: Mackenrodtstraße 14
36039 Fulda, Germany
Postal address: 36035 Fulda, Germany
Phone: +49 661 6003-0
Fax: +49 661 6003-607
Email: mail@jumo.net
Internet: www.jumo.net

JUMO UK LTD
JUMO House
Temple Bank, Riverway
Harlow, Essex, CM20 2DY, UK
Phone: +44 1279 63 55 33
Fax: +44 1279 62 50 29
Email: info.uk@jumo.net
Internet: www.jumo.co.uk

JUMO Process Control, Inc.
6724 Joy Road
East Syracuse, NY 13057, USA
Phone: +1 315 437 5866
Fax: +1 315 437 5860
Email: info.us@jumo.net
Internet: www.jumousa.com

Technical data

Switching functions

Temperature controller TR/ temperature monitor TW	If the temperature on the temperature probe exceeds the setpoint value, the microswitch is activated by the transmission mechanics and the electrical circuit is opened or closed.If the temperature falls below the selected setpoint value (by the amount of the switching differential), the microswitch is reset to its initial position.
Safety temperature monitor STW	If the temperature on the temperature probe exceeds the setpoint value, the snap-action switch is activated and the electrical circuit is opened or closed. If the temperature falls below the selected setpoint value (by the amount of the switching differential), the snap-action switch is reset to its initial position. The electrical circuit 1 - 2 opens when the probe of STW (STB) and STB cools down to the negative temperature range, but it closes again automatically if the temperature rises. If the measuring system is destroyed (i.e. if the expansion fluid emerges) the pressure in the diaphragm drops and permanently opens the electrical circuit.
Safety temperature limiter STB	If the temperature on the temperature probe exceeds the switching point, the snap-action switch is activated, the electrical circuit is opened or closed, and the snap-action switch is mechanically locked.The unlocking difference depends on the control range. Exact values are available from the respective types. They are also available upon request. If the temperature falls below the selected setpoint value (by the amount of the unlocking difference) then the snap-action switch can be manually unlocked again. The electrical circuit 1 - 2 opens when the probe of STW (STB) and STB cools down to the negative temperature range, but it closes again automatically if the temperature rises. If the measuring system is destroyed (i.e. if the expansion fluid emerges) the pressure in the diaphragm drops and permanently opens the electrical circuit. Unlocking is no longer possible.

Temperature compensation

When the ambient temperature on the switching head and the capillary deviates (from the calibration ambient temperature of 22 °C) a switching point offset occurs. This switching point offset is reduced to a minimum due to the temperature compensation.

JUMO GmbH & Co. KG
Delivery address: Mackenrodtstraße 14
36039 Fulda, Germany
Postal address: 36035 Fulda, Germany
Phone: +49 661 6003-0
Fax: +49 661 6003-607
Email: mail@jumo.net
Internet: www.jumo.net

JUMO UK LTD
JUMO House
Temple Bank, Riverway
Harlow, Essex, CM20 2DY, UK
Phone: +44 1279 63 55 33
Fax: +44 1279 62 50 29
Email: info.uk@jumo.net
Internet: www.jumo.co.uk

JUMO Process Control, Inc.
6724 Joy Road
East Syracuse, NY 13057, USA
Phone: +1 315 437 5866
Fax: +1 315 437 5860
Email: info.us@jumo.net
Internet: www.jumousa.com

Housing

	Type 5 + 6	Type 7 + 8
Case bottom section	PA (reinforced)	
Color	Silver-gray RAL 7001 (for TZ 061 black)	
Case lid	ABS with inspection glass (PMMA)	–
Color	Cobalt-blue RAL 5013 (for TZ 061 light-gray, RAL 7035)	
Setpoint adjustment		
TR	Switching point can be adjusted externally with the rotary knob.	–
TW, STW, STB, ATW	Switching point can be adjusted with a screwdriver once the case lid has been removed. The set switching point can be checked through the inspection glass.	Switching point can adjusted with a screwdriver.
Protection type	EN 60529 IP40 or IP54 (for extra code 402)	EN 60529 IP20
Cable inlet	Cable gland M20 x 1.5, for cable-∅ 6-12 mm	Cable connection directly on PUSH IN terminals
Capillary	Ø 1.25 mm	
Min. bending radius	5 mm	
Material	Copper (Cu) or stainless steel (CrNi, 1.4301)	
Case fastening	Pipe mounting with clamping belt for pipe diameter 15 to 100 mm, thermowell mounting, wall mounting	Wall mounting, DIN rail installation TH35 according to DIN EN 60715
Weight	Approx. 0.2 kg	

Electrical data

Electric contact	Snap-action switch with single-pole changeover contact	
Switching capacity	TR/TW/STW/ATW	STB
	On the N/C contact (contact deck 1 - 2): AC 230 V +10 %, 16 (2.5) A, cos φ = 1 (0.6), DC 230 V +10 %, 0.25 A On the N/O contact (contact deck 1 - 4): AC 230 V +10 %, 6.3 (2.5) A, cos φ = 1 (0.6), DC 230 V +10 %, 0.25 A	On the N/C contact (contact deck 1 - 2): AC 230 V +10 %, 16 (2.5) A, cos φ = 1 (0.6), DC 230 V +10 %, 0.25 A On the signal contact (contact deck 1 - 4): AC 230 V +10 %, 2 (04) A, cos φ = 1 (0.6), DC 230 V +10 %, 0.25 A
Electrical connection	PUSH IN contact (plug-type terminal)	
Connection cross section	0.75 to 2.5 mm^2 fine wired (single-wire, fine wired with ferrule)	
Switching reliability	To ensure the greatest possible switching reliability, we recommend a minimum load of: AC/DC = 24 V, 100 mA for silver contacts AC/DC = 10 V, 5 mA for gold-plated contacts (extra code 702)	

JUMO GmbH & Co. KG
Delivery address: Mackenrodtstraße 14
36039 Fulda, Germany
Postal address: 36035 Fulda, Germany
Phone: +49 661 6003-0
Fax: +49 661 6003-607
Email: mail@jumo.net
Internet: www.jumo.net

JUMO UK LTD
JUMO House
Temple Bank, Riverway
Harlow, Essex, CM20 2DY, UK
Phone: +44 1279 63 55 33
Fax: +44 1279 62 50 29
Email: info.uk@jumo.net
Internet: www.jumo.co.uk

JUMO Process Control, Inc.
6724 Joy Road
East Syracuse, NY 13057, USA
Phone: +1 315 437 5866
Fax: +1 315 437 5860
Email: info.us@jumo.net
Internet: www.jumousa.com

Operating data

Switching point accuracy	TR, TW	STW, STB with a setting range of:			
		20 to 80 °C		70 to 130 °C	
	Switching differential 2.5 %	In the "first half" (20 to 50 °C)	In the "second half" (50 to 80 °C)	In the "first half" (70 to 100 °C)	In the "second half" (100 to 130 °C)
	In the upper third of the scale ±3 %, at scale beginning ±6 %	+0/-8 K	+0/-5 K	+0/-12 K	+0/-5 K
Temperature compensation	When the ambient temperature on the switching head and the capillary deviates (from the calibration ambient temperature of 22 °C) a switching point offset of approx. -0.1 K/K occurs (switching point change referring to the ambient temperature change, measured at limit value 120 °C permanently set and capillary length 2,000 mm). This switching point offset is reduced to a minimum due to the standard temperature compensation.				
Limit value temperatures					
Transport and storage	-30 to +80 °C				
In use	0 to 80 °C				
With UL approval	Max. 65 °C				
Design type 7	Max. 55 °C				
Design type 6+ 8	Max. 50 °C				
Pipe mounting					
Pipe temperature	Max. 120 °C				
Rated position (NL)	According to DIN 16257, NL 0 to NL 90 (different NL upon request)				

Connection diagram

	TR, TW, STW	STB
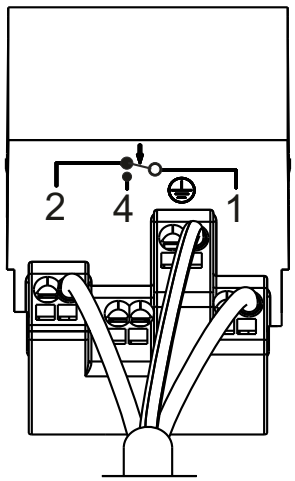	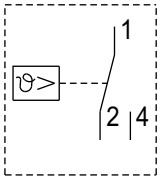	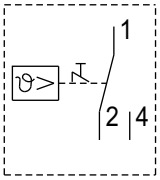

JUMO GmbH & Co. KG
Delivery address: Mackenrodtstraße 14
36039 Fulda, Germany
Postal address: 36035 Fulda, Germany
Phone: +49 661 6003-0
Fax: +49 661 6003-607
Email: mail@jumo.net
Internet: www.jumo.net

JUMO UK LTD
JUMO House
Temple Bank, Riverway
Harlow, Essex, CM20 2DY, UK
Phone: +44 1279 63 55 33
Fax: +44 1279 62 50 29
Email: info.uk@jumo.net
Internet: www.jumo.co.uk

JUMO Process Control, Inc.
6724 Joy Road
East Syracuse, NY 13057, USA
Phone: +1 315 437 5866
Fax: +1 315 437 5860
Email: info.us@jumo.net
Internet: www.jumousa.com

Devices in stock: JUMO heatTHERM-AT

Temperature controller TR, design type 5

Type 603070/0001[a]

- Protection type IP54
- Compensation of the ambient temperature
- Individual limitation of the control range

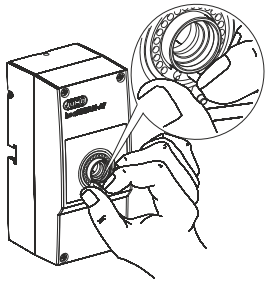

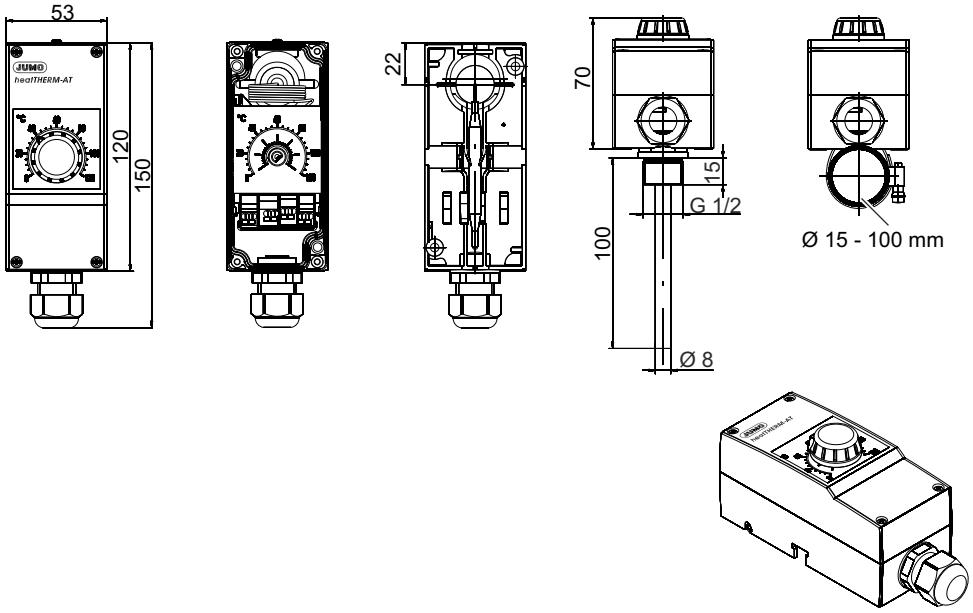

Part no.	Type	Control range °C	Capillary mm	Probe-Ø (d) × L mm	Switching differential	Process connection
60003185	JUMO heatTHERM-AT/ 0001	0 to 120	2,000	6 × 87	Approx. 3 K	With internal capillary and contact probe
60003186						Thermowell: brass nickel-plated

[a] Further design versions (control range, switching differential, process connection) upon request. Minimum order quantity 100 pieces.

JUMO GmbH & Co. KG
Delivery address: Mackenrodtstraße 14
36039 Fulda, Germany
Postal address: 36035 Fulda, Germany
Phone: +49 661 6003-0
Fax: +49 661 6003-607
Email: mail@jumo.net
Internet: www.jumo.net

JUMO UK LTD
JUMO House
Temple Bank, Riverway
Harlow, Essex, CM20 2DY, UK
Phone: +44 1279 63 55 33
Fax: +44 1279 62 50 29
Email: info.uk@jumo.net
Internet: www.jumo.co.uk

JUMO Process Control, Inc.
6724 Joy Road
East Syracuse, NY 13057, USA
Phone: +1 315 437 5866
Fax: +1 315 437 5860
Email: info.us@jumo.net
Internet: www.jumousa.com

Temperature monitor TW

Type 603070/0002[a]

- Protection type IP54
- Compensation of the ambient temperature
- Switching value check through inspection window in the case lid
- UL approval (extra code 061)

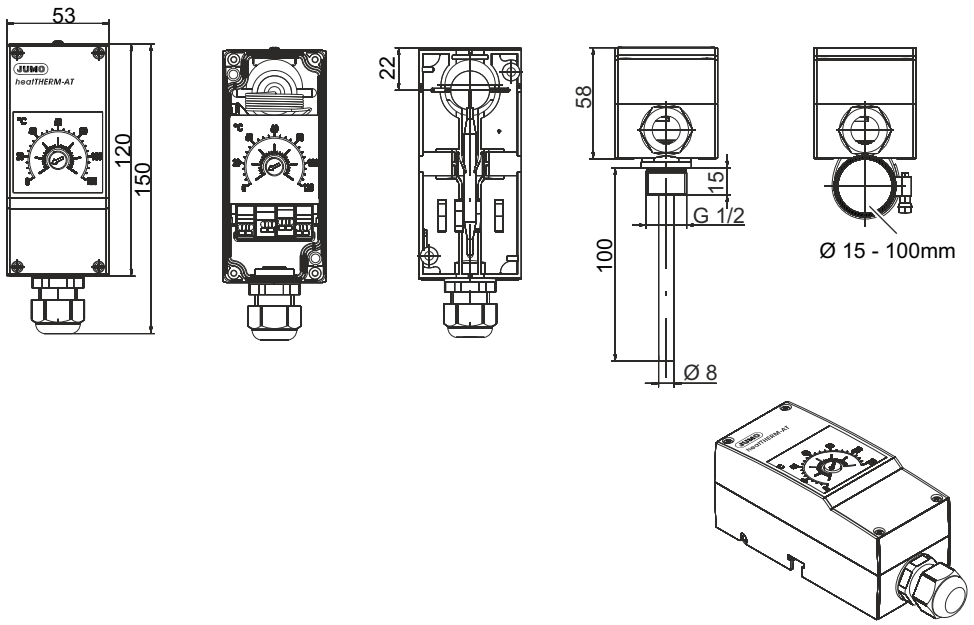

Part no.	Type	Control range °C	Capillary mm	Probe-Ø (d) × L mm	Switching differential	Process connection
60003187	JUMO heatTHERM-AT/ 0002	0 to 120	2,000	6 × 87	Approx. 3 K	With internal capillary and contact probe
60003441[b]						
60003188						Thermowell: brass nickel-plated
60003440[b]		0 to 200		6 × 78	Approx. 5 K	With internal capillary and contact probe

[a] Further design versions (control range, switching differential, process connection) upon request. Minimum order quantity 100 pieces.

[b] UL approval (extra code 061).

JUMO GmbH & Co. KG
Delivery address: Mackenrodtstraße 14
36039 Fulda, Germany
Postal address: 36035 Fulda, Germany
Phone: +49 661 6003-0
Fax: +49 661 6003-607
Email: mail@jumo.net
Internet: www.jumo.net

JUMO UK LTD
JUMO House
Temple Bank, Riverway
Harlow, Essex, CM20 2DY, UK
Phone: +44 1279 63 55 33
Fax: +44 1279 62 50 29
Email: info.uk@jumo.net
Internet: www.jumo.co.uk

JUMO Process Control, Inc.
6724 Joy Road
East Syracuse, NY 13057, USA
Phone: +1 315 437 5866
Fax: +1 315 437 5860
Email: info.us@jumo.net
Internet: www.jumousa.com

Safety temperature monitor STW, design type 5

Type 603070/0020[a]

- Protection type IP54
- Compensation of the ambient temperature
- Switching value check through inspection window in the case lid
- Capillary break protection

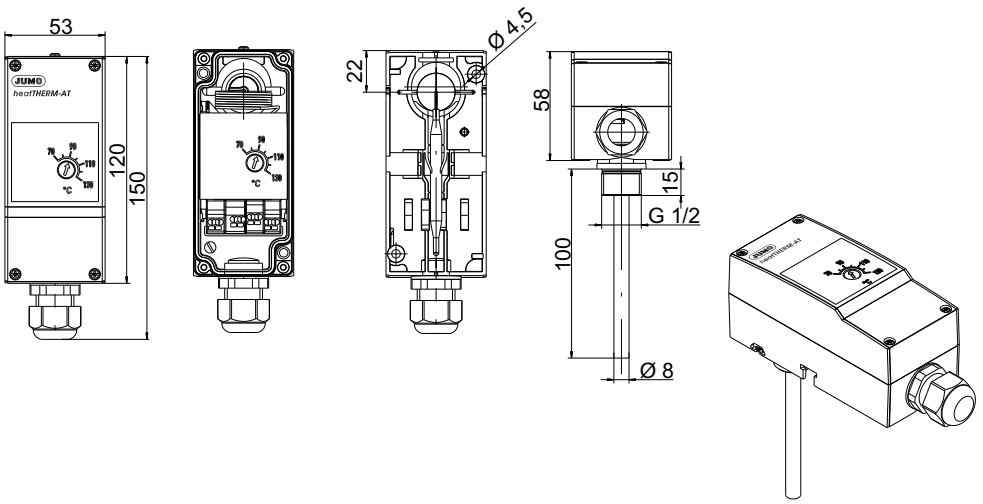

Part no.	Type	Control range °C	Capillary mm	Probe-Ø (d) × L mm	Switching differential	Process connection
60003229	JUMO heatTHERM-AT/ 0020	20 to 80	2,000	6 × 66	Approx. 10 K	With internal capillary and contact probe
60003189		70 to 130		6 × 66		Thermowell: brass nickel-plated

[a] Further design versions (control range, switching differential, process connection) upon request. Minimum order quantity 100 pieces.

Safety temperature limiter STB, design type 5

Type 603070/0070[a]

- Protection type IP54
- Compensation of the ambient temperature
- Switching value check through inspection window in the case lid
- External acknowledgment of the switching point is possible
- Capillary break protection
- UL approval (extra code 061)

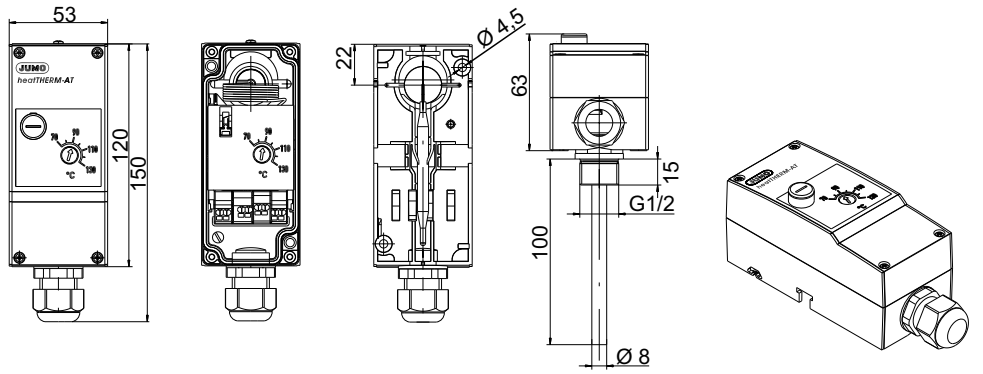

Part no.	Type	Control range °C	Capillary mm	Probe-Ø (d) × L mm	Unlocking difference	Process connection
60003230	JUMO heatTHERM-AT/ 0070	70 to 130	2,000	6 × 66	Approx. 10 K	With internal capillary and contact probe
60003190						Thermowell: brass nickel-plated
60003442[b]		50 to 300		6 × 85	Approx. 25 K	With internal capillary and contact probe
60003443[b]		20 to 150		6 × 66	Approx. 15 K	

[a] Further design versions (control range, switching differential, process connection) upon request. Minimum order quantity 100 pieces.
[b] UL approval (extra code 061).

JUMO GmbH & Co. KG
Delivery address: Mackenrodtstraße 14
36039 Fulda, Germany
Postal address: 36035 Fulda, Germany
Phone: +49 661 6003-0
Fax: +49 661 6003-607
Email: mail@jumo.net
Internet: www.jumo.net

JUMO UK LTD
JUMO House
Temple Bank, Riverway
Harlow, Essex, CM20 2DY, UK
Phone: +44 1279 63 55 33
Fax: +44 1279 62 50 29
Email: info.uk@jumo.net
Internet: www.jumo.co.uk

JUMO Process Control, Inc.
6724 Joy Road
East Syracuse, NY 13057, USA
Phone: +1 315 437 5866
Fax: +1 315 437 5860
Email: info.us@jumo.net
Internet: www.jumousa.com

Room thermostat temperature controller TR, design type 6

Type 603070/0001[a]

- Protection type IP54
- Wall mounting
- Individual limitation of the control range

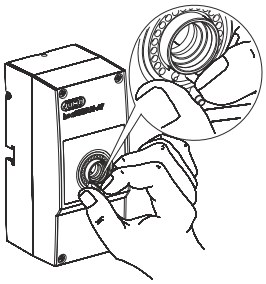

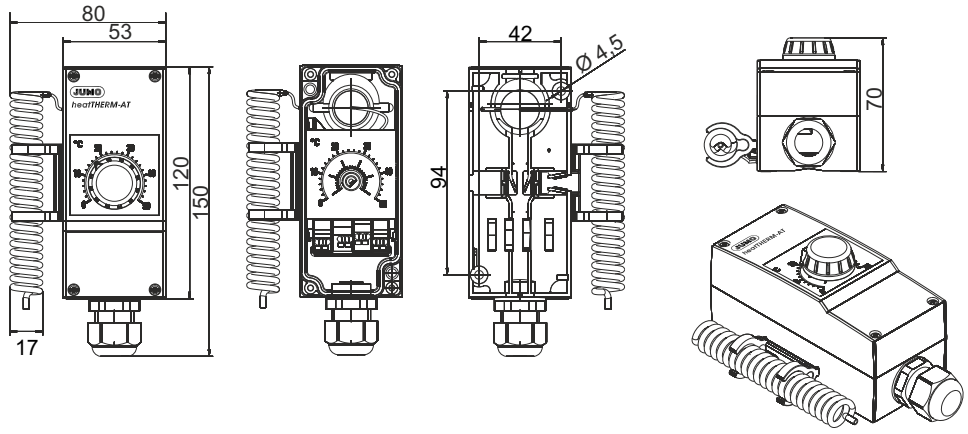

Part no.	Type	Control range °C	Capillary mm	Probe-Ø (d) × L mm	Switching differential	Process connection
60003191	JUMO heatTHERM-AT/ 0001	-10 to +40	–	–	1.5 - 2 K	Spiral probe
60003192		0 to 50				

[a] Further design versions (control range, switching differential, process connection) upon request. Minimum order quantity 100 pieces.

Room thermostat temperature limiter TW, design type 6

Type 603070/0002[a]

- Protection type IP54
- Wall mounting
- Switching value check through inspection window in the case lid

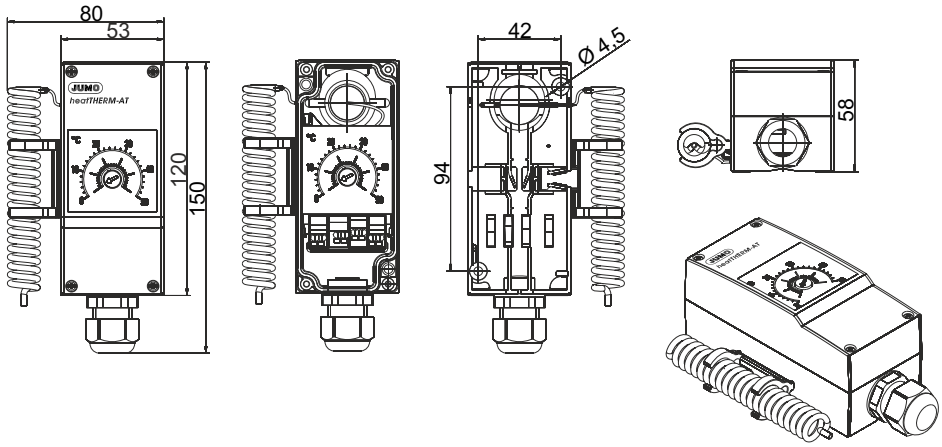

Part no.	Type	Control range °C	Capillary mm	Probe-Ø (d) × L mm	Switching differential	Process connection
60003193	JUMO heatTHERM-AT/ 0002	-10 to +40	–	–	1.5 - 2 K	Spiral probe
60003194		0 to 50				

[a] Further design versions (control range, switching differential, process connection) upon request. Minimum order quantity 100 pieces.

JUMO GmbH & Co. KG
Delivery address: Mackenrodtstraße 14
36039 Fulda, Germany
Postal address: 36035 Fulda, Germany
Phone: +49 661 6003-0
Fax: +49 661 6003-607
Email: mail@jumo.net
Internet: www.jumo.net

JUMO UK LTD
JUMO House
Temple Bank, Riverway
Harlow, Essex, CM20 2DY, UK
Phone: +44 1279 63 55 33
Fax: +44 1279 62 50 29
Email: info.uk@jumo.net
Internet: www.jumo.co.uk

JUMO Process Control, Inc.
6724 Joy Road
East Syracuse, NY 13057, USA
Phone: +1 315 437 5866
Fax: +1 315 437 5860
Email: info.us@jumo.net
Internet: www.jumousa.com

Temperature controller/safety temperature monitor TR/STW, design type 5

Typ 603070/0120[a]

- Protection type IP54
- Compensation of the ambient temperature
- Switching value check through inspection window in the case lid
- Capillary break protection for STW

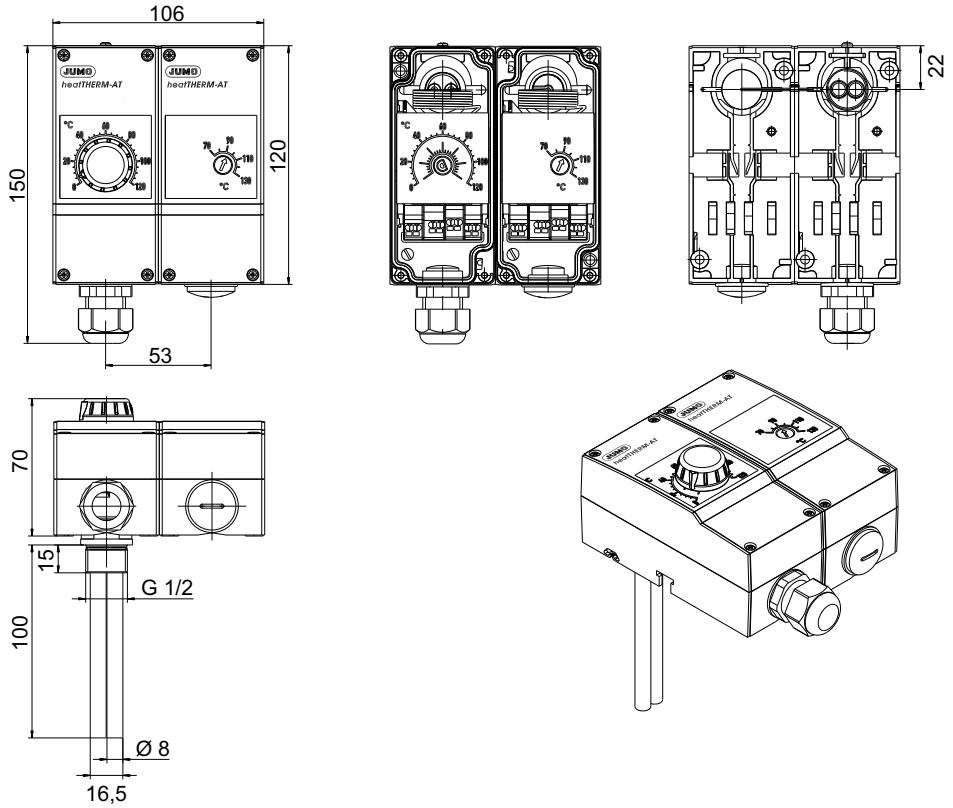

Part no.	Type	Control range °C	Capillary mm	Probe-Ø (d) × L mm	Switching differential	Process connection
60003195	JUMO heatTHERM-AT/ 0120	**TR:** 0 to 120	2,000	6 × 87	Approx. 3 K	With internal capillary and contact probe
		STW: 70 to 130		6 × 66	Approx. 10 K	
60003231		**TR:** 0 to 120		6 × 87	Approx. 3 K	Thermowell: brass nickel-plated
		STW: 70 to 130		6 × 66	Approx. 10 K	

[a] Further design versions (control range, switching differential, process connection) upon request. Minimum order quantity 100 pieces.

JUMO GmbH & Co. KG
Delivery address: Mackenrodtstraße 14
36039 Fulda, Germany
Postal address: 36035 Fulda, Germany
Phone: +49 661 6003-0
Fax: +49 661 6003-607
Email: mail@jumo.net
Internet: www.jumo.net

JUMO UK LTD
JUMO House
Temple Bank, Riverway
Harlow, Essex, CM20 2DY, UK
Phone: +44 1279 63 55 33
Fax: +44 1279 62 50 29
Email: info.uk@jumo.net
Internet: www.jumo.co.uk

JUMO Process Control, Inc.
6724 Joy Road
East Syracuse, NY 13057, USA
Phone: +1 315 437 5866
Fax: +1 315 437 5860
Email: info.us@jumo.net
Internet: www.jumousa.com

Temperature controller/safety temperature limiter TR/STB, design type 5

Type 603070/0170[a]

- Protection type IP54
- Compensation of the ambient temperature
- Switching value check through inspection window in the case lid
- Capillary break protection for STB

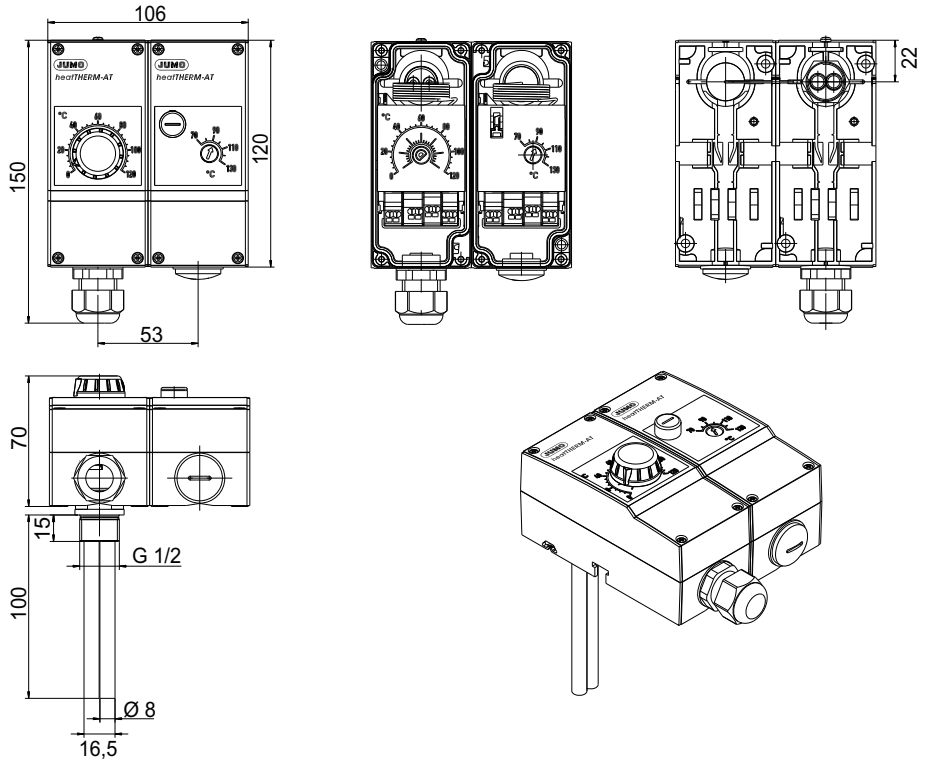

Part no.	Type	Control range °C	Capillary mm	Probe-Ø (d) × L mm	Switching differential/ unlocking difference	Process connection
60003196	JUMO heatTHERM-AT/ 0170	**TR:** 0 to 120	2,000	6 × 87	Approx. 3 K	With internal capillary and contact probe
		STB: 70 to 130		6 × 66	Approx. 10 K	
60003232		**TR:** 0 to 120		6 × 87	Approx. 3 K	Thermowell: brass nickel-plated
		STB: 70 to 130		6 × 66	Approx. 10 K	

[a] Further design versions (control range, switching differential, process connection) upon request. Minimum order quantity 100 pieces.

JUMO GmbH & Co. KG
Delivery address: Mackenrodtstraße 14
36039 Fulda, Germany
Postal address: 36035 Fulda, Germany
Phone: +49 661 6003-0
Fax: +49 661 6003-607
Email: mail@jumo.net
Internet: www.jumo.net

JUMO UK LTD
JUMO House
Temple Bank, Riverway
Harlow, Essex, CM20 2DY, UK
Phone: +44 1279 63 55 33
Fax: +44 1279 62 50 29
Email: info.uk@jumo.net
Internet: www.jumo.co.uk

JUMO Process Control, Inc.
6724 Joy Road
East Syracuse, NY 13057, USA
Phone: +1 315 437 5866
Fax: +1 315 437 5860
Email: info.us@jumo.net
Internet: www.jumousa.com

Room thermostat temperature monitor/temperature monitor TW/TW, design type 6

Type 603070/0202[a]

- Protection type IP54
- Wall mounting
- Switching value check through inspection window in the case lid

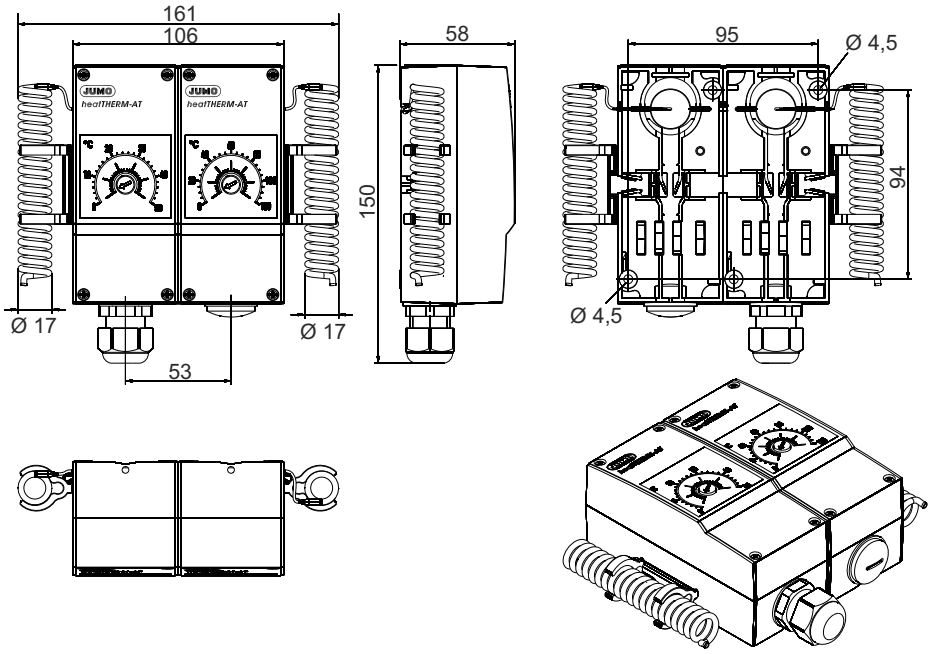

Part no.	Type	Control range °C	Capillary mm	Probe-Ø (d) × L mm	Switching differential	Process connection
60003212	JUMO heatTHERM-AT/ 0202	-10 to +40	–	–	1.5 - 2 K	Spiral probe
60003213		0 to 50				

[a] Further design versions (control range, switching differential, process connection) upon request. Minimum order quantity 100 pieces.

JUMO GmbH & Co. KG
Delivery address: Mackenrodtstraße 14
36039 Fulda, Germany
Postal address: 36035 Fulda, Germany
Phone: +49 661 6003-0
Fax: +49 661 6003-607
Email: mail@jumo.net
Internet: www.jumo.net

JUMO UK LTD
JUMO House
Temple Bank, Riverway
Harlow, Essex, CM20 2DY, UK
Phone: +44 1279 63 55 33
Fax: +44 1279 62 50 29
Email: info.uk@jumo.net
Internet: www.jumo.co.uk

JUMO Process Control, Inc.
6724 Joy Road
East Syracuse, NY 13057, USA
Phone: +1 315 437 5866
Fax: +1 315 437 5860
Email: info.us@jumo.net
Internet: www.jumousa.com

Flue gas temperature monitor with mounting sleeve, design type 5

Type 603070/0020[a]

- Switching value check through inspection window in the case lid
- Max. allowable probe temperature 600 °C
- Approval as ATW with capillary break protection according to DIN EN 14597
- Time constant $t_{0.632}$ ≤ 45 sec. in flue gas

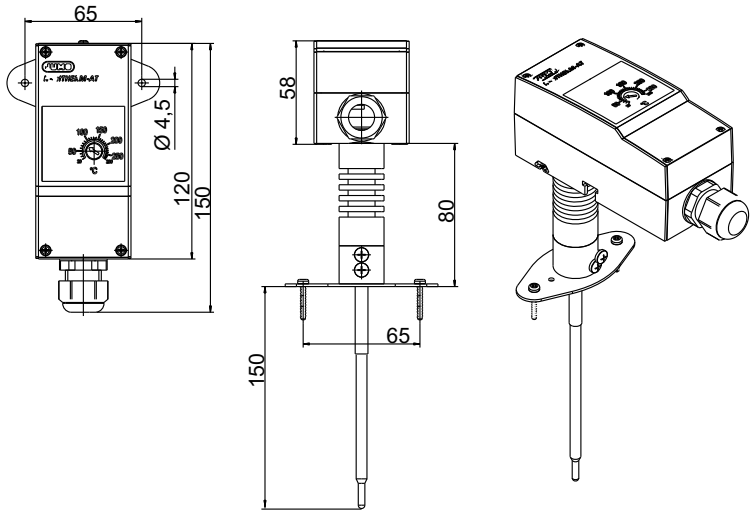

Part no.	Type	Control range °C	Capillary mm	Probe-Ø (d) × L mm	Switching differential	Process connection
60003390	JUMO heatTHERM-AT/ 0020	20 to 280	–	6 × 150	Approx. 1.5 K	Intermediate piece with mounting flange

[a] Further design versions (control range, switching differential, process connection) upon request. Minimum order quantity 100 pieces.

JUMO GmbH & Co. KG
Delivery address: Mackenrodtstraße 14
36039 Fulda, Germany
Postal address: 36035 Fulda, Germany
Phone: +49 661 6003-0
Fax: +49 661 6003-607
Email: mail@jumo.net
Internet: www.jumo.net

JUMO UK LTD
JUMO House
Temple Bank, Riverway
Harlow, Essex, CM20 2DY, UK
Phone: +44 1279 63 55 33
Fax: +44 1279 62 50 29
Email: info.uk@jumo.net
Internet: www.jumo.co.uk

JUMO Process Control, Inc.
6724 Joy Road
East Syracuse, NY 13057, USA
Phone: +1 315 437 5866
Fax: +1 315 437 5860
Email: info.us@jumo.net
Internet: www.jumousa.com

Devices in stock: JUMO heatTHERM-DR

Thermostat for DIN rail installation TH35, according to DIN EN 60715, design type 7

Type 603070/....-[a]

- Protection type IP20
- DIN rail installation TH35
- Easy to assemble and user friendly

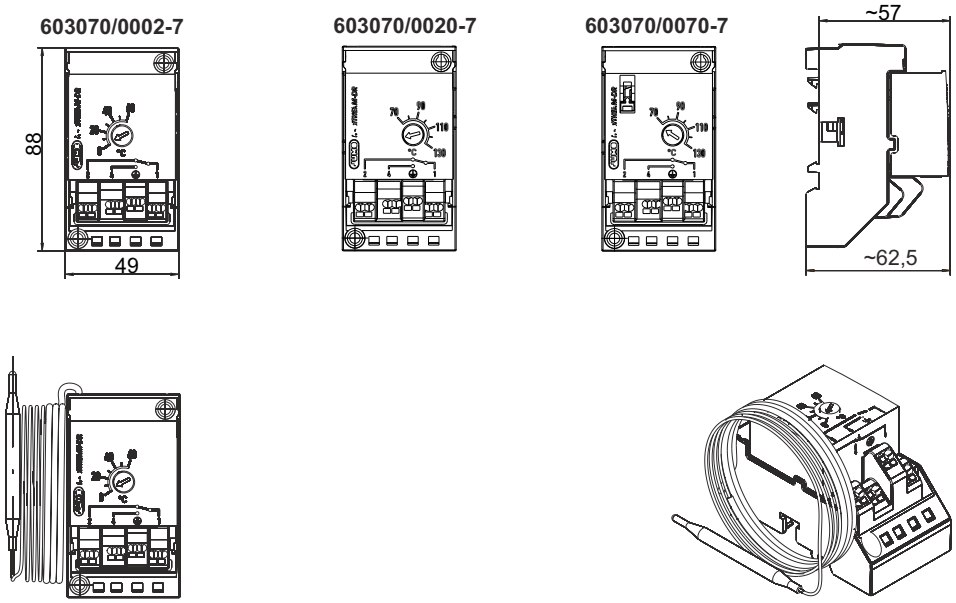

Part no.	Type	Control range °C	Capillary mm	Probe-Ø (d) × L mm	Switching differential	Process connection
Temperature monitor TW						
60003283	603070/0002	0 to 120	2,000	6 × 87	Approx. 3 K	With capillary and contact probe
60003284		0 to 200		6 × 78	Approx. 5 K	
60003285		50 to 300		6 × 66	Approx. 6 K	
Safety temperature monitor STW						
60003286	603070/0020	70 to 130	2,000	6 × 66	Approx. 10 K	With capillary and contact probe
Safety temperature limiter STB					**Unlocking difference**	
60003287	603070/0070	70 to 130	2,000	6 × 66	Approx. 10 K	With capillary and contact probe
60003299		20 to 150		6 × 60	In the upper third approx. 15 K, at the scale beginning approx. 30 K	
60003300		50 to 300		6 × 87	In the upper third approx. 25 K, at the scale beginning approx. 45 K	

[a] Further design versions (control range, switching differential, process connection) upon request. Minimum order quantity 100 pieces.

JUMO GmbH & Co. KG
Delivery address: Mackenrodtstraße 14
36039 Fulda, Germany
Postal address: 36035 Fulda, Germany
Phone: +49 661 6003-0
Fax: +49 661 6003-607
Email: mail@jumo.net
Internet: www.jumo.net

JUMO UK LTD
JUMO House
Temple Bank, Riverway
Harlow, Essex, CM20 2DY, UK
Phone: +44 1279 63 55 33
Fax: +44 1279 62 50 29
Email: info.uk@jumo.net
Internet: www.jumo.co.uk

JUMO Process Control, Inc.
6724 Joy Road
East Syracuse, NY 13057, USA
Phone: +1 315 437 5866
Fax: +1 315 437 5860
Email: info.us@jumo.net
Internet: www.jumousa.com

Thermostat for DIN rail installation TH35, according to DIN EN 60715, design type 8

Type 603070/0002-8[a]

- Protection type IP20
- DIN rail installation TH35
- Easy to assemble and user friendly

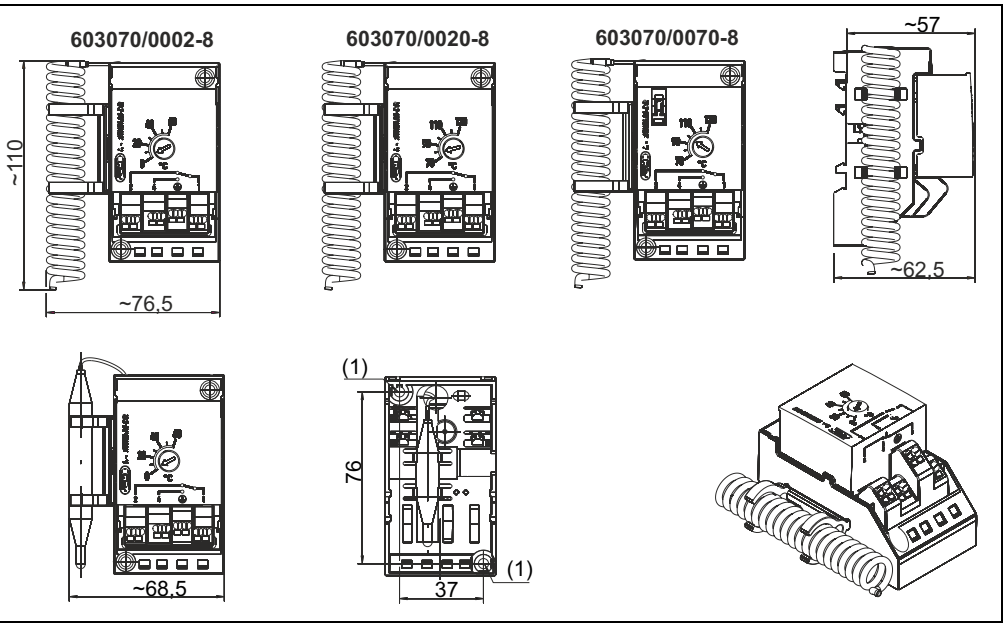

1 Fastening hole = Ø 4.5 mm

[a] Upon request. Minimum order quantity 100 pieces.

JUMO GmbH & Co. KG
Delivery address: Mackenrodtstraße 14
36039 Fulda, Germany
Postal address: 36035 Fulda, Germany
Phone: +49 661 6003-0
Fax: +49 661 6003-607
Email: mail@jumo.net
Internet: www.jumo.net

JUMO UK LTD
JUMO House
Temple Bank, Riverway
Harlow, Essex, CM20 2DY, UK
Phone: +44 1279 63 55 33
Fax: +44 1279 62 50 29
Email: info.uk@jumo.net
Internet: www.jumo.co.uk

JUMO Process Control, Inc.
6724 Joy Road
East Syracuse, NY 13057, USA
Phone: +1 315 437 5866
Fax: +1 315 437 5860
Email: info.us@jumo.net
Internet: www.jumousa.com

Order details

	(1)	**Basic type**	
603070		JUMO heatTHERM-AT/-DR	
	(2)	**Basic type extensions**	
0001		Temperature controller (TR)	
0002		Temperature monitor (TW)	
0020		Safety temperature monitor (STW) or flue gas temperature monitor (ATW)	
0070		Safety temperature limiter (STB)	
0120		Temperature controller/Safety temperature monitor (TR/STW)	
0170		Temperature controller/Safety temperature limiter (TR/STB)	
0202		Temperature monitor/Temperature monitor (TW/TW)	
	(3)	**Design type**	
5		Surface-mounted thermostat with thermowell, flange sleeve, capillary, or as surface probe	
6		Bimetal room thermostat with coil sensor	
7		DIN rail thermostat with remote sensor	
8		DIN rail room thermostat with coil sensor	
	(4)	**Control range 1**[a]	
000		With permanently set limit value	
016		-10 to +40 °C	TR, TW
021		0 to 50 °C	TR, TW
026		0 to 120 °C	TR, TW
028		0 to 200 °C	TR, TW
040		20 to 80 °C	STW
043		20 to 150 °C	TR, TW, STB
064		50 to 300 °C	TR, TW, STB with protective sleeve (process connection 76)
671		70 to 130 °C	STW, STB
384		20 to 280 °C	ATW (only with process connection 80)
	(5)	**Control range 2**a	
000		Single thermostat	
016		-10 to +40 °C	TR, TW (adjustable)
021		0 to 50 °C	TR, TW (adjustable)
671		70 to 130 °C	STW, STB (adjustable)
	(6)	**Limit value 1**	
095		95 °C	
100		100 °C	
110		110 °C	
	(7)	**Limit value 2**	
000		With adjustable control range	
095		95 °C	
100		100 °C	
110		110 °C	
	(8)	**Switching differential 1**	
00		Without switching differential (STB)	
25		2.5 % of the scale range	
70		7 %	
	(9)	**Switching differential 2**	
00		Without switching differential (STB)	
25		2.5 % of the scale range	
70		7 %	
	(10)	**Capillary length 1**[b]	

JUMO GmbH & Co. KG
Delivery address: Mackenrodtstraße 14
36039 Fulda, Germany
Postal address: 36035 Fulda, Germany
Phone: +49 661 6003-0
Fax: +49 661 6003-607
Email: mail@jumo.net
Internet: www.jumo.net

JUMO UK LTD
JUMO House
Temple Bank, Riverway
Harlow, Essex, CM20 2DY, UK
Phone: +44 1279 63 55 33
Fax: +44 1279 62 50 29
Email: info.uk@jumo.net
Internet: www.jumo.co.uk

JUMO Process Control, Inc.
6724 Joy Road
East Syracuse, NY 13057, USA
Phone: +1 315 437 5866
Fax: +1 315 437 5860
Email: info.us@jumo.net
Internet: www.jumousa.com

0		Only for room thermostat
1000		1,000 mm
2000		2,000 mm
3000		3,000 mm
4000		4,000 mm
5000		5,000 mm
	(11)	**Capillary length 2b**
0		Only for room thermostat
1000		1,000 mm
2000		2,000 mm
3000		3,000 mm
4000		4,000 mm
5000		5,000 mm
	(12)	**Material of capillary 1**
00		None
20		CrNi (Stainless steel)
40		Cu (Copper)
	(13)	**Material of capillary 2**
00		None
20		CrNi (Stainless steel)
40		Cu (Copper)
	(14)	**Process connection**
10		Plain cylindrical probe/surface probe
15		Spiral probe
76[c]		Intermediate piece
80[d]		Intermediate piece with mounting flange
	(15)	**Probe diameter 1**
6		Ø 6 mm
17		Ø 17 mm[e]
	(16)	**Probe diameter 2**
00		Single thermostat
6		Ø 6 mm
17		Ø 17 mme
	(17)	**Probe material 1**
20		CrNi (Stainless steel)
40		Cu (Copper)
	(18)	**Probe material 2**
00		Single thermostat
20		CrNi (Stainless steel)
40		Cu (Copper)
	(19)	**Type of remote sensor protective hose**
00		Without
13		PVC hose, black
	(20)	**Protective hose length (insulation from housing)**
0		Without
460		460 mm
	(21)	**Extra codes**
000		Without
061		UL approval
402		Case protection type IP54
702		Snap-action switch with gold plating
749		Setting range with 250 angular degrees (only STB/STW)

JUMO GmbH & Co. KG
Delivery address: Mackenrodtstraße 14
36039 Fulda, Germany
Postal address: 36035 Fulda, Germany
Phone: +49 661 6003-0
Fax: +49 661 6003-607
Email: mail@jumo.net
Internet: www.jumo.net

JUMO UK LTD
JUMO House
Temple Bank, Riverway
Harlow, Essex, CM20 2DY, UK
Phone: +44 1279 63 55 33
Fax: +44 1279 62 50 29
Email: info.uk@jumo.net
Internet: www.jumo.co.uk

JUMO Process Control, Inc.
6724 Joy Road
East Syracuse, NY 13057, USA
Phone: +1 315 437 5866
Fax: +1 315 437 5860
Email: info.us@jumo.net
Internet: www.jumousa.com

758	Tightening band for surface probe

[a] Further control ranges/limit value ranges up to 350 °C upon request (up to 500 °C without approval).

[b] Special length upon request.

[c] For a control range end value greater than 150 °C, select process connection 76 for mounting with a protective sleeve. Choose the protective sleeve according to data sheet 606710, screw-in sleeve "20" with thread G 1/2 made of stainless steel (CrNi).

[d] Only selectable with control range 20 to 280 °C (ATW).

[e] Spiral probe for room thermostat (with process connection 15).

	(1)		(2)		(3)		(4)		(5)		(6)		(7)		(8)	
Order code		/		-		-		-		-		-		-		-
Order example	603070	/	0001	-	5	-	021	-	671	-	000	-	000	-	70	-

(9)		(10)		(11)		(12)		(13)		(14)		(15)	
	-		-		-		-		-		-		-
00	-	2000	-	00	-	40	-	00	-	10	-	6	

(16)		(17)		(18)		(19)		(20)		(21)	
	-		-		-		-		/		,...[a]
00	-	20	-	20	-	00	-	0	/	000	

[a] List extra codes in sequence, separated by commas.

JUMO GmbH & Co. KG
Delivery address: Mackenrodtstraße 14
36039 Fulda, Germany
Postal address: 36035 Fulda, Germany
Phone: +49 661 6003-0
Fax: +49 661 6003-607
Email: mail@jumo.net
Internet: www.jumo.net

JUMO UK LTD
JUMO House
Temple Bank, Riverway
Harlow, Essex, CM20 2DY, UK
Phone: +44 1279 63 55 33
Fax: +44 1279 62 50 29
Email: info.uk@jumo.net
Internet: www.jumo.co.uk

JUMO Process Control, Inc.
6724 Joy Road
East Syracuse, NY 13057, USA
Phone: +1 315 437 5866
Fax: +1 315 437 5860
Email: info.us@jumo.net
Internet: www.jumousa.com

Accessories

(according to product group 606710)

Thermowell set Suitable for **1 probe**	Thermowell with sealing collar				Clamp for strain relief	Plate for surface-mounted thermostat	Screw for surface-mounted thermostat
	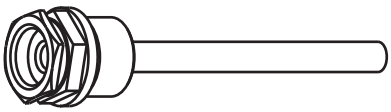					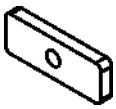	
Part no.	Type	Abbre-viation	Connection	Ø sleeve × fitting length EL		Material	Pressure loading capacity at 150 °C
60003177	Thermowell for JUMO heatTHERM, 1 probe	28	G 1/2	8 × 100 mm		Brass/ nickel-plated	48 bar
60003203				8 × 150 mm			
60003171				8 × 200 mm			
60003172				8 × 100 mm		Stainless steel/ 1.4571	88 bar
60003205				8 × 150 mm			
60003173				8 × 200 mm			

Thermowell set Suitable for **2 probes**	Thermowell with sealing collar				Clamp for strain relief	Plate for surface-mounted thermostat	Screw for surface-mounted thermostat
	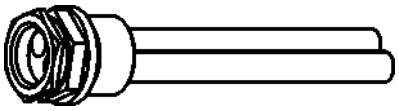					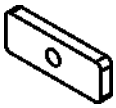	
Part no.	Type	Abbre-viation	Connection	Ø sleeve × fitting length EL		Material	Pressure loading capacity at 150 °C
60003178	Thermowell for JUMO heat THERM, 2 probes	29	G 1/2	2 × 8 × 100 mm		Brass/ nickel-plated	48 bar
60003204				2 × 8 × 150 mm			
60003174				2 × 8 × 200 mm			

Thermowell set Suitable for **2 probes**	Thermowell with sealing collar				Pressure spring	Clamp for strain relief	Plate for surface-mounted thermostat	Screw for surface-mounted thermostat
	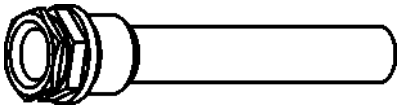						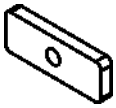	
Part no.	Type	Abbre-viation	Connection	Ø sleeve × fitting length EL			Material	Pressure loading capacity at 150 °C
60003175	Thermowell for JUMO heat THERM, 2 probes	49	G 1/2	15 × 100 mm			Stainless steel/ 1.4571	48 bar
60003206				15 × 150 mm				
60003176				15 × 200 mm				

Adapter piece for thermowell[a]		Material
Part no.		Steel/nickel-plated
00507273		

[a] Necessary for thermowell with process connection "20" or "23.

JUMO GmbH & Co. KG
Delivery address: Mackenrodtstraße 14
36039 Fulda, Germany
Postal address: 36035 Fulda, Germany
Phone: +49 661 6003-0
Fax: +49 661 6003-607
Email: mail@jumo.net
Internet: www.jumo.net

JUMO UK LTD
JUMO House
Temple Bank, Riverway
Harlow, Essex, CM20 2DY, UK
Phone: +44 1279 63 55 33
Fax: +44 1279 62 50 29
Email: info.uk@jumo.net
Internet: www.jumo.co.uk

JUMO Process Control, Inc.
6724 Joy Road
East Syracuse, NY 13057, USA
Phone: +1 315 437 5866
Fax: +1 315 437 5860
Email: info.us@jumo.net
Internet: www.jumousa.com

Use of electroplated nickel-plated brass protective sleeves

Electroplated nickel-plated brass protective sleeves are generally suitable for permanent contact with drinking water under the following conditions:

- The nickel plating is intact and the coating is undamaged.
- The fitting is regularly inspected for corrosion or damage.
- Damaged surfaces are repaired or the fittings are replaced.

Regular inspection and evaluation of electroplated nickel-plated brass protective sleeves, as determined by the user, is essential.

Trademark information

All trademarks and trade and company names used are the property of their rightful owners or authors.