TN2531

Temperature sensor with display

TN-013KCBD10-MFRKG/US/ /V

phase-out article

Alternative articles: TN2511
When selecting an alternative article and accessories please note that technical data may differ!

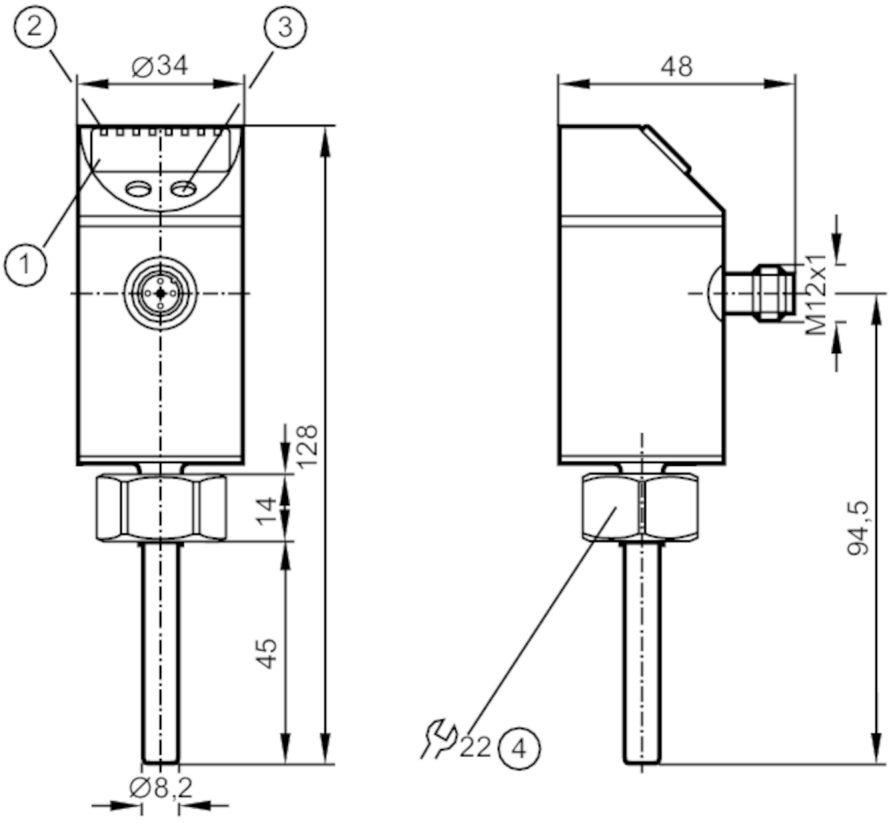

1 alphanumeric display 4-digit
2 status LEDs
3 programming button
4 internal thread M18 x 1.5

Product characteristics			
Number of inputs and outputs		Number of digital outputs: 1; Number of analogue outputs: 1	
Measuring range		-40...150 °C	-40...302 °F
Communication interface		IO-Link	
Process connection		threaded connection M18 x 1,5 internal thread	
Installation length EL	[mm]	45	
Application			
Special feature		Gold-plated contacts	
Measuring element		1 x Pt 1000; (to DIN EN 60751, class B)	
Media		liquids and gases	
Pressure rating		300 bar	30 MPa
Minimum installation depth	[mm]	12	
Electrical data			
Operating voltage	[V]	18...32 DC; ("supply class 2" to cULus)	
Current consumption	[mA]	< 50	

TN2531

Temperature sensor with display

TN-013KCBD10-MFRKG/US/ /V

Protection class		III	
Reverse polarity protection		yes	
Power-on delay time	[s]	1	
Integrated watchdog		yes	
Inputs / outputs			
Number of inputs and outputs		Number of digital outputs: 1; Number of analogue outputs: 1	
Outputs			
Total number of outputs		2	
Output signal		switching signal; analogue signal; IO-Link; (configurable)	
Electrical design		PNP/NPN	
Number of digital outputs		1	
Output function		normally open / normally closed; (parameterisable)	
Max. voltage drop switching output DC	[V]	2	
Permanent current rating of switching output DC	[mA]	250	
Number of analogue outputs		1	
Analogue current output	[mA]	4...20	
Max. load	[Ω]	(Ub - 10 V) x 50	
Analogue voltage output	[V]	0...10	
Min. load resistance	[Ω]	2000	
Short-circuit protection		yes	
Type of short-circuit protection		pulsed	
Overload protection		yes	
Measuring/setting range			
Probe length L	[mm]	45	
Measuring range		-40...150 °C	-40...302 °F
Set point SP		-39.5...150 °C	-39...302 °F
Reset point rP		-40...149.5 °C	-40...301 °F
Analogue start point		-40...145 °C	-40...293 °F
Analogue end point		-35...150 °C	-31...302 °F
In steps of		0.1 °C	0.1 °F
Resolution			
Resolution of switching output	[K]	0.1	
Resolution of analogue output	[K]	0.1	
Resolution of display	[K]	0.1	
Accuracy / deviations			
Switch point accuracy	[K]	± 0,3	
Precision analogue output	[K]	± 0,3	
Display accuracy	[K]	± 0,3	
Temperature drift per 10 K	[K]	0.1	
Response times			
Dynamic response T05 / T09	[s]	1 / 3; (to DIN EN 60751)	

TN2531

Temperature sensor with display

TN-013KCBD10-MFRKG/US/ /V

Max. measuring/display cycle [ms]	200		
Software / programming			
Adjustment of the switch point	programming button		
Interfaces			
Communication interface	IO-Link		
Transmission type	COM2 (38,4 kBaud)		
IO-Link revision	1.0		
Min. process cycle time [ms]	2.3		
Supported DeviceIDs	**Type of operation**	**DeviceID**	
	default	87	
Operating conditions			
Ambient temperature [°C]	-25...70		
Storage temperature [°C]	-40...100		
Protection	IP 67		
Tests / approvals			
EMC	DIN EN 61000-4-2 ESD	4 kV CD / 8 kV AD	
	EN 61000-4-3 HF radiated	10 V/m	
	DIN EN 61000-4-4 Burst	2 kV	
	DIN EN 61000-4-5 Surge	1 kV	
	EN 61000-4-6 HF conducted	10 V	
Shock resistance	DIN IEC 68-2-27	50 g (11 ms)	
Vibration resistance	DIN EN 60068-2-6	20 g (10...2000 Hz)	
MTTF [years]	209		
Mechanical data			
Weight [g]	202.8		
Housing	cylindrical		
Dimensions [mm]	Ø 34 / L = 128		
Materials	stainless steel (304/1.4301); PBT; PC; EPDM/X; FKM		
Materials (wetted parts)	stainless steel (316L/1.4404); O-ring: FKM 80 Shore A		
Process connection	threaded connection M18 x 1,5 internal thread		
Probe diameter [mm]	8.2		
Installation length EL [mm]	45		
Displays / operating elements			
Display	Display unit	2 x LED, green	
	switching status	LED, yellow	
	measured values	alphanumeric display, 4-digit	
	programming	alphanumeric display, 4-digit	
Remarks			
Remarks	The values for accuracy apply to flowing water.		
Pack quantity	1 pcs.		

TN2531

Temperature sensor with display

TN-013KCBD10-MFRKG/US/ /V

Electrical connection

Connector: 1 x M12; coding: A; Contacts: 4, gold-plated



Connection

