SD9000

Compressed air meter

SDR32DGXFPKG/US-100

phase-out article

Alternative articles: SD9500
When selecting an alternative article and accessories please note that technical data may differ!

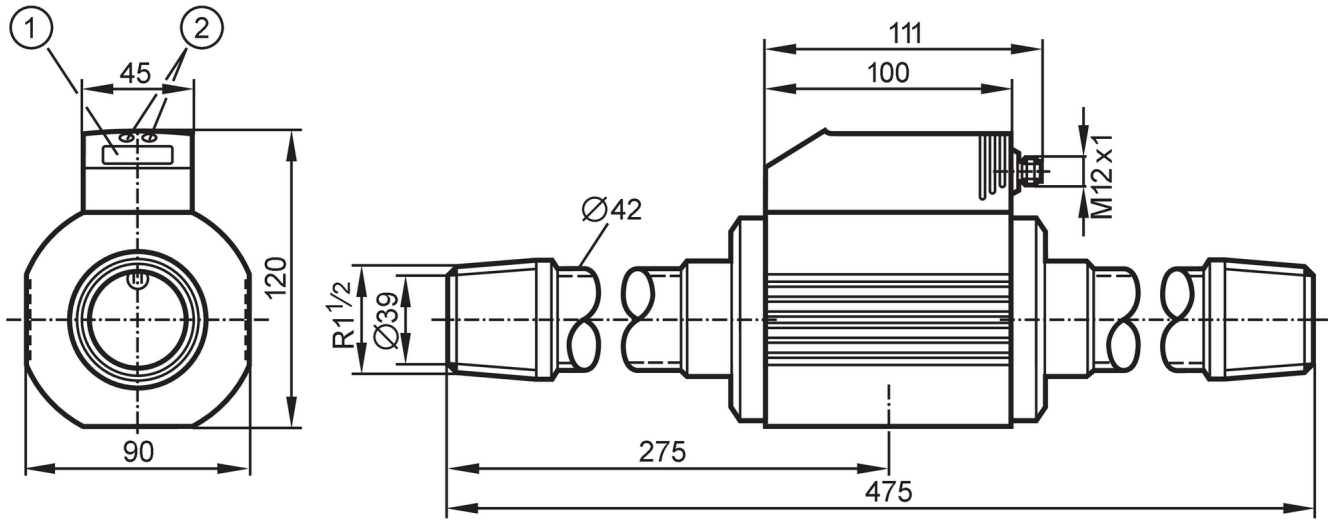

1 alphanumeric display 4-digit
2 programming buttons

Product characteristics			
Number of inputs and outputs	Number of digital outputs: 2; Number of analogue outputs: 1		
Measuring range	20...6835 l/min	0.3...95.3 m/s	1.5...410 m³/h
Process connection	threaded connection R 1 1/2 external thread DN40		
Application			
Application	for industrial applications		
Media	compressed air		
Note on media	air quality ISO 8573-1 class 141 class 344		
Medium temperature [°C]	0...60		
Pressure rating	16 bar	1.6 MPa	
Electrical data			
Operating voltage [V]	18...30 DC; (to SELV/PELV)		
Current consumption [mA]	< 110		
Min. insulation resistance [MΩ]	100; (500 V DC)		
Protection class	III		
Reverse polarity protection	yes		
Power-on delay time [s]	1		
Inputs / outputs			
Number of inputs and outputs	Number of digital outputs: 2; Number of analogue outputs: 1		
Outputs			
Total number of outputs	2		

SD9000

Compressed air meter

SDR32DGXFPKG/US-100

Output signal		switching signal; analogue signal; pulse signal; IO-Link; (configurable)		
Electrical design		PNP		
Number of digital outputs		2		
Output function		normally open / normally closed; (parameterisable)		
Max. voltage drop switching output DC	[V]	2		
Permanent current rating of switching output DC	[mA]	250; (per output)		
Number of analogue outputs		1		
Analogue current output	[mA]	4...20; (scalable)		
Max. load	[Ω]	500		
Pulse output		consumed quantity meter		
Short-circuit protection		yes		
Type of short-circuit protection		pulsed		
Overload protection		yes		
Measuring/setting range				
Measuring range		20...6835 l/min	0.3...95.3 m/s	1.5...410 m³/h
Display range		0...8200 l/min	0...114.4 m/s	0...492 m³/h
Set point SP		55...6835 l/min	0.8...95.3 m/s	3.5...410 m³/h
Reset point rP		20...6800 l/min	0.3...94.8 m/s	1.5...408 m³/h
Analogue start point ASP		0...5125 l/min	0...71.5 m/s	0...307.5 m³/h
Analogue end point AEP		1710...6835 l/min	23.8...95.3 m/s	102.5...410 m³/h
In steps of		5 l/min	0.1 m/s	0.5 m³/h
Volumetric flow quantity monitoring				
Pulse value		0.005...4 000 000 m³		
In steps of		0.001 m³		
Pulse length	[s]	0,018...2		
Temperature monitoring				
Measuring range	[°C]	0...60		
Display range	[°C]	-12...72		
Accuracy / deviations				
Flow monitoring				
Repeatability	[% of the measured value]	± 1,5		
Accuracy (in the measuring range)		± (3 % MW + 0,3 % MEW) / ± (6 % MW + 0,6 % MEW); (class 141 /; class 344; conditions: installation to DIN ISO 2533; installation in pipes: DN40)		
Temperature monitoring				
Accuracy	[K]	± 2; (medium flow in the limit area of the flow measurement range)		
Response times				
Flow monitoring				
Response time	[s]	0.1; (dAP = 0)		
Damping process value dAP in steps	[s]	0 - 0,2 - 0,4 - 0,6 - 0,8 - 1		

SD9000

Compressed air meter

SDR32DGXFPKG/US-100

Software / programming			
Parameter setting options		Flow monitoring; quantity meter; Preset counter; Temperature monitoring; hysteresis / window; normally open / normally closed; current/pulse output; display can be rotated and switched off; Display unit; totaliser	
Interfaces			
Communication interface		IO-Link	
Transmission type		COM2 (38,4 kBaud)	
IO-Link revision		1.1	
SDCI standard		IEC 61131-9 CDV	
SIO mode		yes	
Required master port type		A	
Process data analogue		3	
Process data binary		2	
Min. process cycle time	[ms]	4.1	
Supported DeviceIDs		**Type of operation**	**DeviceID**
		default	269
Operating conditions			
Ambient temperature	[°C]	0...60	
Storage temperature	[°C]	-20...85	
Max. relative air humidity	[%]	90	
Protection		IP 65	
Tests / approvals			
EMC		DIN EN 61000-6-2	
		DIN EN 61000-6-3	
CPA approval		model number	002TG
		accuracy class	-
		maximum allowable error	± 4 % FS
		Q (min)	1,4 m³/h
		Q (t)	-
		Q (max)	410 m³/h
Vibration resistance		DIN EN 68000-2-6	5 g (55...2000 Hz)
MTTF	[years]	227	
Pressure Equipment Directive		Sound engineering practice; can be used for group 2 fluids; group 1 fluids on request	
Mechanical data			
Weight	[g]	4004	
Housing		rectangular	
Dimensions	[mm]	475 x 90 x 120	
Materials		PBT-GF20; NBR; PC; stainless steel (304/1.4301); PTFE; brass coated; aluminium powder-coated	
Materials (wetted parts)		stainless steel (304/1.4301); FKM; ceramics glass passivated; PEEK GF30; polyester; aluminium	
Process connection		threaded connection R 1 1/2 external thread DN40	

SD9000

Compressed air meter

SDR32DGXFPKG/US-100

Displays / operating elements		
Display	Display unit	5 x LED, green (Nl/min, Nm³/h, Nm/s, Nm³, °C)
	function display	1 x LED, green
	switching status	2 x LED, yellow
	measured values	alphanumeric display, 4-digit
	programming	alphanumeric display, 4-digit

Remarks	
Remarks	MW = measured value
	MEW = Final value of the measuring range
	Measuring, display and setting ranges refer to the standard volume flow according to DIN ISO 2533.
	For information about installation and operation please see the operating instructions.
Pack quantity	1 pcs.

Electrical connection

Connector: 1 x M12; coding: A; Contacts: 4



Connection

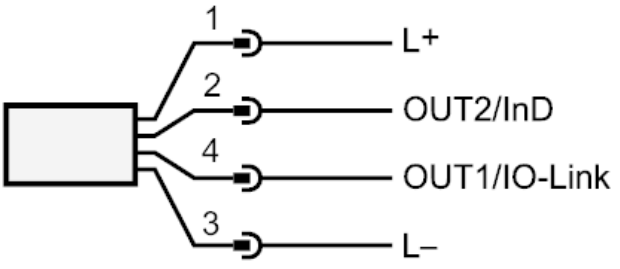

OUT1/IO-Link: switching output volumetric flow quantity monitoring
Pulse output quantity meter
signal output Preset counter

OUT2/InD: switching output volumetric flow quantity monitoring / Temperature monitoring
analogue output volumetric flow quantity monitoring / Temperature monitoring
input counter reset