SD6600

Industrial gas counter

SDR12DGXFRKG/US-100

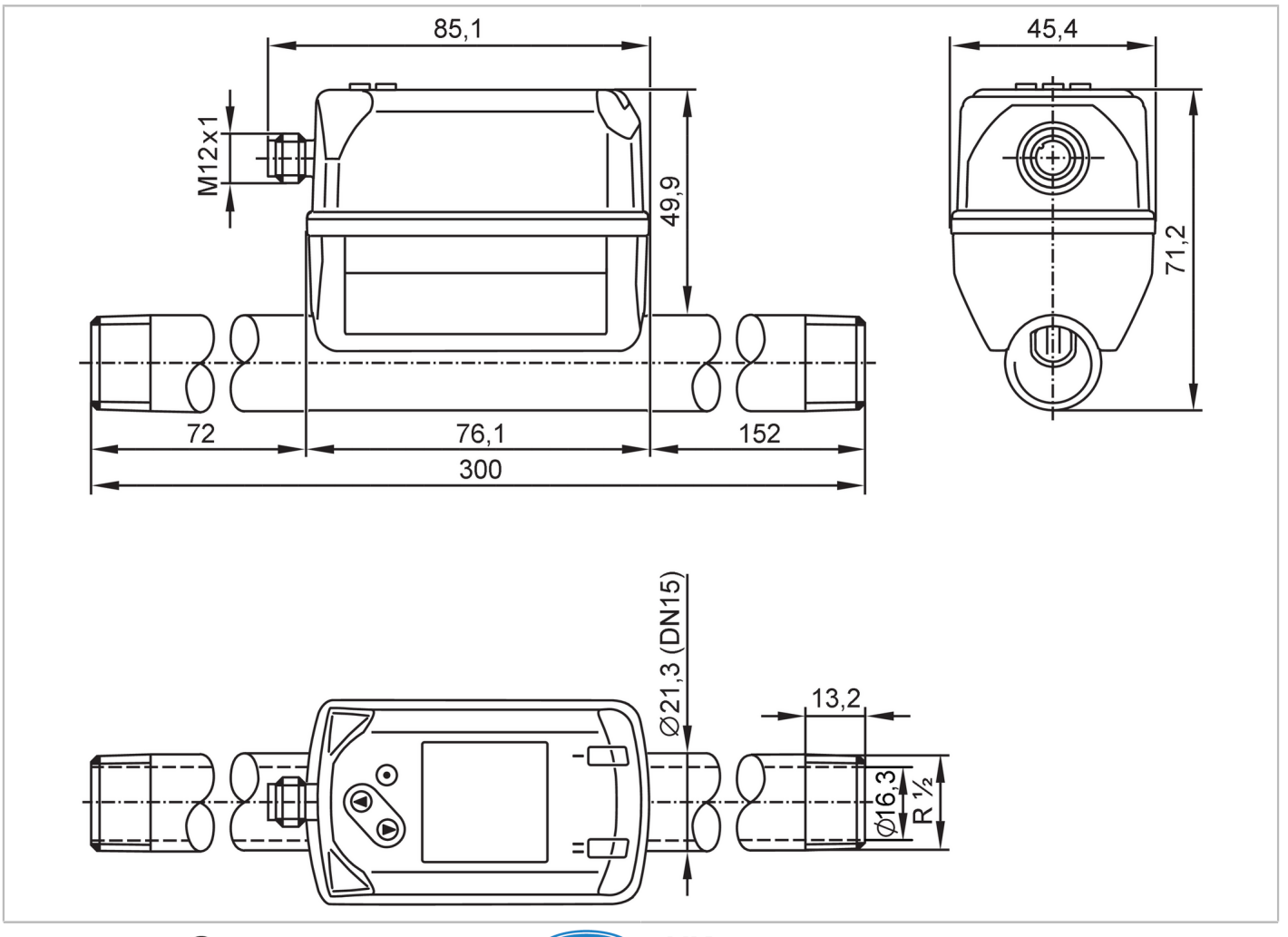

Product characteristics			
Number of inputs and outputs	Number of digital outputs: 2; Number of analogue outputs: 1		
Measuring range	4...1250 l/min	0.3...99.8 m/s	0.25...75 m³/h
Process connection	threaded connection R 1/2 external thread DN15		
Application			
Application	for industrial applications		
Media	Argon (Ar); carbon dioxide (CO2); nitrogen (N2); compressed air		
Medium temperature [°C]	-10...60		
Min. burst pressure	64 bar	6.4 MPa	
Pressure rating	16 bar	1.6 MPa	
MAWP for applications according to CRN [bar]	9.7		
Electrical data			
Operating voltage [V]	18...30 DC; (to SELV/PELV)		
Current consumption [mA]	< 80		
Min. insulation resistance [MΩ]	100; (500 V DC)		
Protection class	III		
Reverse polarity protection	yes		

SD6600

Industrial gas counter

SDR12DGXFRKG/US-100

Power-on delay time	[s]	1
Inputs / outputs		
Number of inputs and outputs		Number of digital outputs: 2; Number of analogue outputs: 1
Inputs		
Inputs		counter reset
Outputs		
Output signal		switching signal; analogue signal; pulse signal; IO-Link; (configurable)
Electrical design		PNP/NPN
Number of digital outputs		2
Output function		normally open / normally closed; (parameterisable)
Max. voltage drop switching output DC	[V]	2.5
Permanent current rating of switching output DC	[mA]	150; (per output)
Number of analogue outputs		1
Analogue current output	[mA]	4...20; (scalable)
Max. load	[Ω]	500
Pulse output		consumed quantity meter
Short-circuit protection		yes
Type of short-circuit protection		pulsed
Overload protection		yes

Measuring/setting range				
Measuring range		4...1250 l/min	0.3...99.8 m/s	0.25...75 m³/h
Display range		0...1500 l/min	0...119.8 m/s	0...90 m³/h
Resolution		1 l/min	0.1 m/s	0.05 m³/h
Set point SP		11...1250 l/min	0.9...99.8 m/s	0.65...74.97 m³/h
Reset point rP		5...1243 l/min	0.4...99.3 m/s	0.28...74.6 m³/h
Analogue start point ASP		0...1000 l/min	0...79.8 m/s	0...60 m³/h
Analogue end point AEP		250...1250 l/min	20...99.8 m/s	15...75 m³/h
Low flow cut-off LFC		1...13 l/min	0.1...1.1 m/s	0.09...0.8 m³/h
In steps of		1 l/min	0.1 m/s	0.01 m³/h
Pressure monitoring				
Measuring range	[bar]	-1...16		
Display range	[bar]	-1...20		
Resolution	[bar]	0.05		
Set point SP	[bar]	-0.92...16		
Reset point rP	[bar]	-1...15.92		
Analogue start point	[bar]	-1...12.8		
Analogue end point	[bar]	2.2...16		
In steps of	[bar]	0.01		
Volumetric flow quantity monitoring				
Measuring range		0...100000000 m³	0...353146667.2 scf	
Display range		0...100000000 m³	0...353146667.2 scf	
Set point SP		0.001...10000000 m³	0.05...353146667.2 scf	
Pulse value		0.001...10000000 m³	0.05...353146667.2 scf	

SD6600

Industrial gas counter

SDR12DGXFRKG/US-100

In steps of		0.0001 m³	0.005 scf
Pulse length	[s]	0.002...2	
Temperature monitoring			
Measuring range		-10...60 °C	14...140 °F
Display range		-24...74 °C	-11.2...165.2 °F
Resolution		0.2 °C	0.5 °F
Set point SP		-9.7...60 °C	14.6...140 °F
Reset point rP		-10...59.7 °C	14...139.4 °F
Analogue start point		-10...46 °C	14...114.8 °F
Analogue end point		4...60 °C	39.2...140 °F
In steps of		0.1 °C	0.1 °F
Accuracy / deviations			
Temperature coefficient	[1/K]	± 0,07 % MW	
Accuracy (in the measuring range)		± (6 % MW + 0,6 % MEW); at medium temperature 23 °C	
Repeatability		± (0,4 % MW + 0,1 % MEW)	
Pressure monitoring			
Repeatability [% of the final value]		± 0,2	
Characteristics deviation [% of the final value]		< ± 0,5; (BFSL = Best Fit Straight Line)	
Greatest TEMPCO of the span [% MEW / 10 K]		± 0,3	
Greatest TEMPCO of the zero point [% MEW / 10 K]		± 0,1	
Temperature monitoring			
Accuracy	[K]	± 0,5; (medium flow in the limit area of the flow measurement range)	
Response times			
Response time	[s]	< 0.1; (dAP = 0, T09)	
Damping process value dAP	[s]	0...5	
Pressure monitoring			
Response time	[s]	0.05	
Temperature monitoring			
Dynamic response T05 / T09	[s]	T09 = 0,5	
Software / programming			
Parameter setting options		hysteresis / window; normally open / normally closed; current/pulse output; display can be rotated and switched off; Display unit; totaliser	
Interfaces			
Communication interface		IO-Link	
Transmission type		COM2 (38,4 kBaud)	
IO-Link revision		1.1	
SDCI standard		IEC 61131-9 CDV	
Profiles		Common - I&D	Identification and Diagnosis
		Function	Measurement data, standard resolution

SD6600

Industrial gas counter

SDR12DGXFRKG/US-100

SIO mode		yes	
Required master port type		A	
Process data analogue		8	
Process data binary		2	
Min. process cycle time	[ms]	7.2	
Supported DeviceIDs		**Type of operation**	**DeviceID**
		default	864
Operating conditions			
Ambient temperature	[°C]	0...60	
Storage temperature	[°C]	-20...85	
Max. relative air humidity	[%]	90	
Protection		IP 65; IP 67	
Tests / approvals			
EMC		DIN EN 60947-5-9	
CPA approval		model number	003TG
		accuracy class	-
		maximum allowable error	± 7 % FS
		Q (min)	0,25 m³/h
		Q (t)	-
		Q (max)	75 m³/h
Vibration resistance		DIN EN 68000-2-6	5 g (10...2000 Hz)
MTTF	[years]	183	
UL approval		UL approval no.	I012
		File number UL	E174189
Pressure Equipment Directive		Sound engineering practice; can be used for stable gases fluid group 2	
Mechanical data			
Weight	[g]	730	
Housing		rectangular	
Dimensions	[mm]	300 x 45.4 x 71.2	
Materials		PBT+PC-GF30; PPS GF40; stainless steel (304/1.4301); stainless steel (303/1.4305); steel (1.5523) galvanised; 2.0401 (brass / CW614N); FKM	
Materials (wetted parts)		stainless steel (304/1.4301); stainless steel (303/1.4305); FKM; ceramics glass passivated; PPS GF40; Al2O3 (ceramics); acrylate	
Process connection		threaded connection R 1/2 external thread DN15	
Displays / operating elements			
Display			colour display 1,44", 128 x 128 pixels
			2 x LED, yellow
Remarks			
Remarks		MW = measured value	
		MEW = Final value of the measuring range	
		Standard conditions: 1013.25 mbar / 15 °C / 0 % relative humidity	
		For information about installation and operation please see the operating instructions.	
Pack quantity		1 pcs.	

SD6600

Industrial gas counter

SDR12DGXFRKG/US-100

Electrical connection

Connector: 1 x M12; coding: A; Contacts: 4



Connection

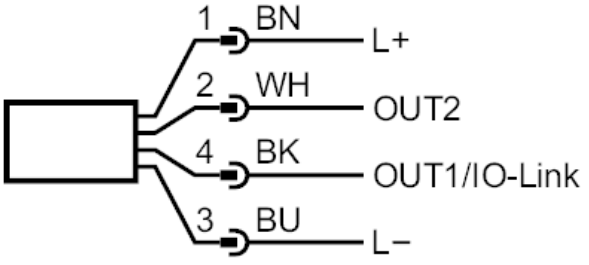

OUT1/IO-Link:	switching output flow switching output temperature switching output pressure Pulse output quantity meter signal output Preset counter
OUT2/InD:	switching output flow switching output temperature switching output pressure analogue output flow analogue output temperature analogue output pressure signal output Preset counter Pulse output quantity meter input counter reset