SD2000

Compressed air meter

SDR21DGXFPKG/US-100

phase-out article

Alternative articles: SD2500
When selecting an alternative article and accessories please note that technical data may differ!

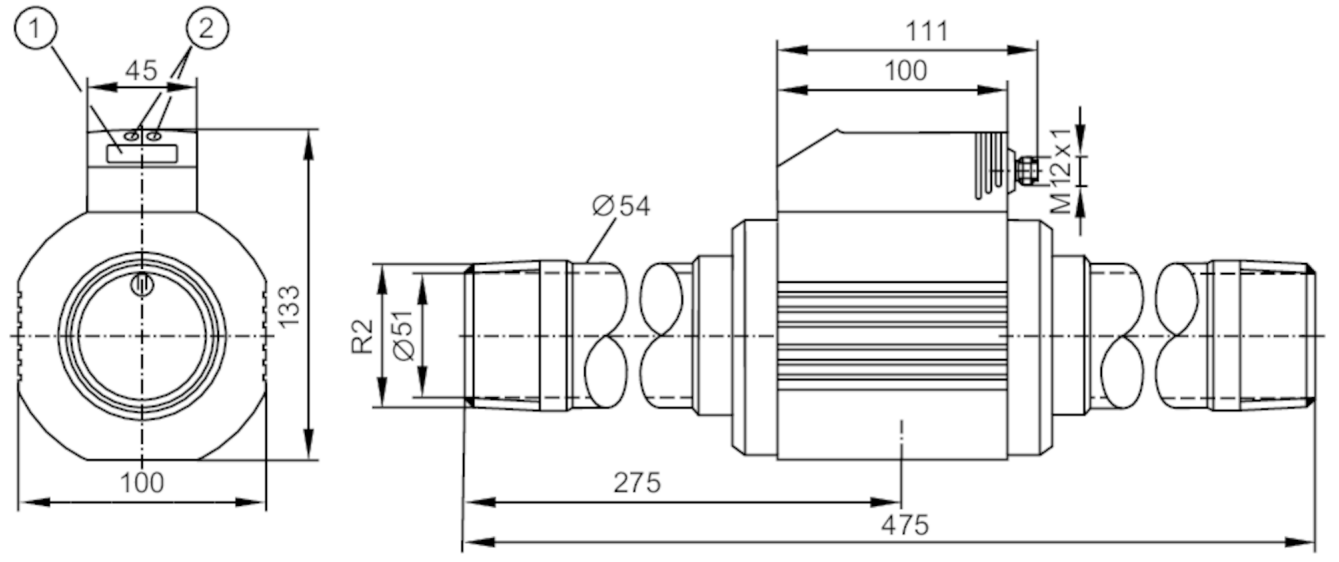

1 alphanumeric display 4-digit
2 programming buttons

Product characteristics			
Number of inputs and outputs	Number of digital outputs: 2; Number of analogue outputs: 1		
Measuring range	0.3...95.2 m/s	3...700 m³/h	0.04...11.66 m³/min
Process connection	threaded connection R 2 external thread DN50		
Application			
Application	for industrial applications		
Media	compressed air		
Note on media	air quality ISO 8573-1 class 141 class 344		
Medium temperature [°C]	0...60		
Pressure rating	16 bar	1.6 MPa	
Electrical data			
Operating voltage [V]	18...30 DC; (to SELV/PELV)		
Current consumption [mA]	< 110		
Min. insulation resistance [MΩ]	100; (500 V DC)		
Protection class	III		
Reverse polarity protection	yes		
Power-on delay time [s]	1		
Inputs / outputs			
Number of inputs and outputs	Number of digital outputs: 2; Number of analogue outputs: 1		

SD2000

Compressed air meter

SDR21DGXFPKG/US-100

Outputs				
Total number of outputs		2		
Output signal		switching signal; analogue signal; pulse signal; IO-Link; (configurable)		
Electrical design		PNP		
Number of digital outputs		2		
Output function		normally open / normally closed; (parameterisable)		
Max. voltage drop switching output DC	[V]	2		
Permanent current rating of switching output DC	[mA]	250; (per output)		
Number of analogue outputs		1		
Analogue current output	[mA]	4...20; (scalable)		
Max. load	[Ω]	500		
Pulse output		consumed quantity meter		
Short-circuit protection		yes		
Type of short-circuit protection		pulsed		
Overload protection		yes		
Measuring/setting range				
Measuring range		0.3...95.2 m/s	3...700 m³/h	0.04...11.66 m³/min
Display range		0...114.2 m/s	0...840 m³/h	0...13.99 m³/min
Set point SP		0.7...95.2 m/s	5...700 m³/h	0.09...11.66 m³/min
Reset point rP		0.3...94.8 m/s	2...697 m³/h	0.04...11.61 m³/min
Analogue start point ASP		0...71.4 m/s	0...525 m³/h	0...8.75 m³/min
Analogue end point AEP		23.8...95.2 m/s	175...700 m³/h	2.91...11.66 m³/min
In steps of		0.1 m/s	1 m³/h	0.01 m³/min
Volumetric flow quantity monitoring				
Pulse value		0.010...4000000 m³		
In steps of		0.010 m³		
Pulse length	[s]	0,021...2		
Temperature monitoring				
Measuring range	[°C]	0...60		
Display range	[°C]	-12...72		
Accuracy / deviations				
Flow monitoring				
Repeatability	[% of the measured value]	± 1,5		
Accuracy (in the measuring range)		± (3 % MW + 0,3 % MEW) / ± (6 % MW + 0,6 % MEW); (class 141 /; class 344; conditions: installation to DIN ISO 2533; installation in pipes: DN50)		
Temperature monitoring				
Accuracy	[K]	± 2; (medium flow in the limit area of the flow measurement range)		
Response times				
Flow monitoring				
Response time	[s]	0.1; (dAP = 0)		

SD2000

Compressed air meter

SDR21DGXFPKG/US-100

Damping process value dAP in steps	[s]	0 - 0,2 - 0,4 - 0,6 - 0,8 - 1	
Software / programming			
Parameter setting options		Flow monitoring; quantity meter; Preset counter; Temperature monitoring; hysteresis / window; normally open / normally closed; current/pulse output; display can be rotated and switched off; Display unit; totaliser	
Interfaces			
Communication interface		IO-Link	
Transmission type		COM2 (38,4 kBaud)	
IO-Link revision		1.1	
SDCI standard		IEC 61131-9 CDV	
SIO mode		yes	
Required master port type		A	
Process data analogue		3	
Process data binary		2	
Min. process cycle time	[ms]	4.1	
Supported DeviceIDs		**Type of operation**	**DeviceID**
		default	270
Operating conditions			
Ambient temperature	[°C]	0...60	
Storage temperature	[°C]	-20...85	
Max. relative air humidity	[%]	90	
Protection		IP 65	
Tests / approvals			
EMC		DIN EN 61000-6-2	
		DIN EN 61000-6-3	
CPA approval		model number	002TG
		accuracy class	-
		maximum allowable error	± 4 % FS
		Q (min)	3 m³/h
		Q (t)	-
		Q (max)	700 m³/h
Vibration resistance		DIN EN 68000-2-6	5 g (55...2000 Hz)
MTTF	[years]	227	
Pressure Equipment Directive		Sound engineering practice; can be used for group 2 fluids; group 1 fluids on request	
Mechanical data			
Weight	[g]	4313	
Housing		rectangular	
Dimensions	[mm]	475 x 100 x 133	
Materials		PBT-GF20; NBR; PC; stainless steel (304/1.4301); PTFE; brass coated; FKM; aluminium powder-coated	
Materials (wetted parts)		stainless steel (304/1.4301); FKM; ceramics glass passivated; PEEK GF30; polyester; aluminium	
Process connection		threaded connection R 2 external thread DN50	

SD2000

Compressed air meter

SDR21DGXFPKG/US-100

Displays / operating elements		
Display	Display unit	5 x LED, green (Nm³/min, Nm³/h, Nm/s, Nm³, °C)
	function display	1 x LED, green
	switching status	2 x LED, yellow
	measured values	alphanumeric display, 4-digit
	programming	alphanumeric display, 4-digit

Remarks	
Remarks	MW = measured value
	MEW = Final value of the measuring range
	Measuring, display and setting ranges refer to the standard volume flow according to DIN ISO 2533.
	For information about installation and operation please see the operating instructions.
Pack quantity	1 pcs.

Electrical connection

Connector: 1 x M12; coding: A; Contacts: 4



Connection

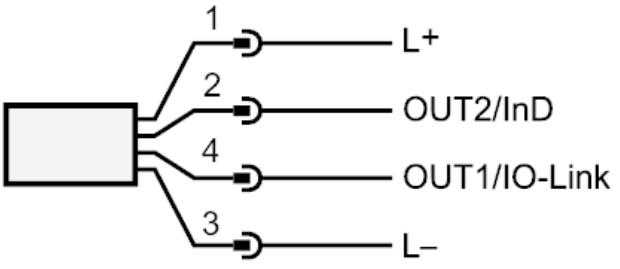

OUT1/IO-Link: switching output volumetric flow quantity monitoring
Pulse output quantity meter
signal output Preset counter

OUT2/InD: switching output volumetric flow quantity monitoring / Temperature monitoring
analogue output volumetric flow quantity monitoring / Temperature monitoring
input counter reset