SD0523

Compressed air meter

SDD11DGXFPKG/US-100

phase-out article

Alternative articles: SD1540
When selecting an alternative article and accessories please note that technical data may differ!

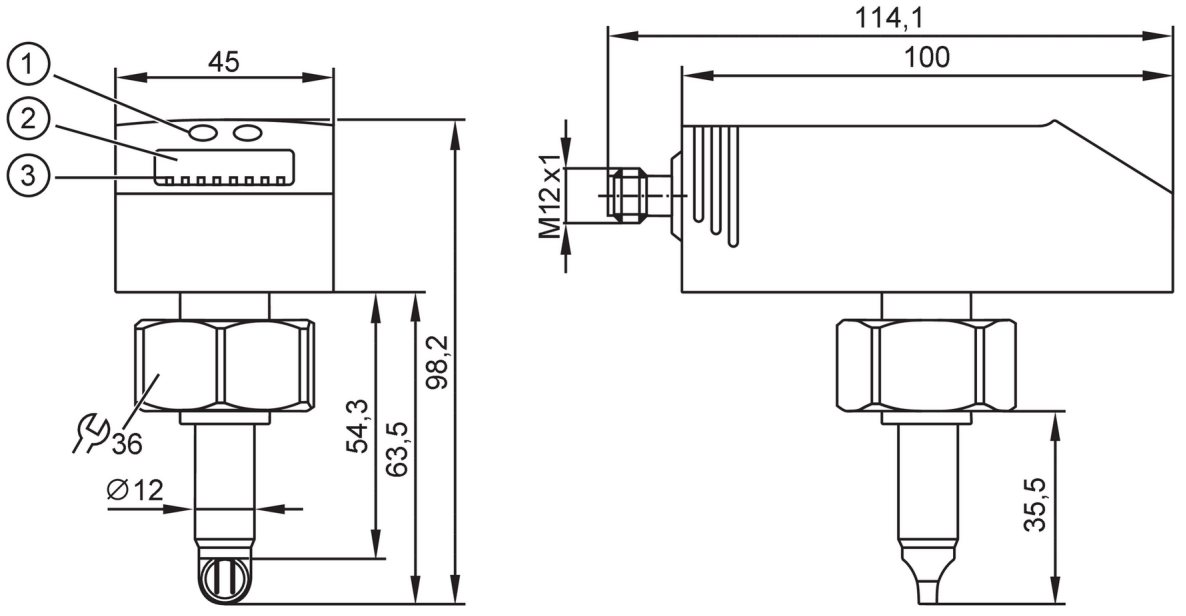

1 programming buttons
2 alphanumeric display 4-digit
3 status LEDs

Product characteristics			
Number of inputs and outputs	Number of digital outputs: 2; Number of analogue outputs: 1		
Measuring range	0.5...143.9 m/s	8...2110 m³/h	0.12...35.18 m³/min
Process connection	threaded connection G 1 internal thread		
Application			
Installation	Adjustable to inside pipe diameters; (38...254 mm)		
Media	compressed air		
Medium temperature [°C]	0...60		
Pressure rating	16 bar	232 psi	1.6 MPa
MAWP for applications according to CRN [bar]	16		
Electrical data			
Operating voltage [V]	18...30 DC; (to SELV/PELV)		
Current consumption [mA]	< 110		
Min. insulation resistance [MΩ]	100; (500 V DC)		
Protection class	III		
Reverse polarity protection	yes		
Power-on delay time [s]	1		
Inputs / outputs			
Number of inputs and outputs	Number of digital outputs: 2; Number of analogue outputs: 1		

SD0523

Compressed air meter

SDD11DGXFPKG/US-100

Outputs		
Total number of outputs		2
Output signal		switching signal; analogue signal; pulse signal; IO-Link; (configurable)
Electrical design		PNP
Number of digital outputs		2
Output function		normally open / normally closed; (parameterisable)
Max. voltage drop switching output DC	[V]	2
Permanent current rating of switching output DC	[mA]	250; (per output)
Number of analogue outputs		1
Analogue current output	[mA]	4...20; (scalable)
Max. load	[Ω]	500
Pulse output		consumed quantity meter
Short-circuit protection		yes
Type of short-circuit protection		pulsed
Overload protection		yes

Measuring/setting range				
Measuring range		Measuring/setting range; Flow monitoring; The values apply at: Ø 72 mm		
Measuring range		0.5...143.9 m/s	8...2110 m³/h	0.12...35.18 m³/min
Display range		0...172.7 m/s	0...2532 m³/h	0...42.22 m³/min
Resolution		0.1 m/s	2 m³/h	0.02 m³/min
Set point SP		1.2...143.9 m/s	18...2110 m³/h	0.28...35.18 m³/min
Reset point rP		0.5...143.2 m/s	6...2100 m³/h	0.12...35 m³/min
Analogue start point ASP		0...107.9 m/s	0...1582 m³/h	0...26.38 m³/min
Analogue end point AEP		36...143.9 m/s	528...2110 m³/h	8.8...35.18 m³/min
In steps of		0.1 m/s	2 m³/h	0.02 m³/min
Volumetric flow quantity monitoring				
Pulse value		1...1000 x 10³		
In steps of		1 Nm³		
Pulse length	[s]	0,7...2 (D = 72 mm)		
Temperature monitoring				
Measuring range	[°C]	0...60		
Display range	[°C]	-12...72		
Resolution	[°C]	0.2		
Set point SP	[°C]	0.4...60		
Reset point rP	[°C]	0.2...59.8		
Analogue start point	[°C]	0...45		
Analogue end point	[°C]	15...60		
In steps of	[°C]	0.2		

Accuracy / deviations		
Flow monitoring		
Repeatability	[% of the measured value]	± 1,5

SD0523

Compressed air meter

SDD11DGXFPKG/US-100

Accuracy (in the measuring range)		± (6 % MW + 0,6 % MEW); (D = 72mm, T = 22 °C; standard volume flow: 50...850 Nm³/h)	
Temperature monitoring			
Accuracy	[K]	± 2,5 (Q > 2 Nm³/h)	
Response times			
Flow monitoring			
Response time	[s]	0.1; (dAP = 0)	
Damping process value dAP in steps	[s]	0 - 0,2 - 0,4 - 0,6 - 0,8 - 1	
Temperature monitoring			
Dynamic response T05 / T09	[s]	30 (Q > 2 Nm³/h)	
Software / programming			
Parameter setting options		Flow monitoring; quantity meter; Preset counter; Temperature monitoring; hysteresis / window; normally open / normally closed; current/pulse output; display can be rotated and switched off; Display unit; totaliser	
Interfaces			
Communication interface		IO-Link	
Transmission type		COM2 (38,4 kBaud)	
IO-Link revision		1.1	
SDCI standard		IEC 61131-9	
SIO mode		yes	
Required master port type		A	
Process data analogue		3	
Process data binary		2	
Min. process cycle time	[ms]	4.1	
Supported DeviceIDs		**Type of operation**	**DeviceID**
		default	381
Operating conditions			
Ambient temperature	[°C]	0...60	
Storage temperature	[°C]	-20...85	
Max. relative air humidity	[%]	90	
Protection		IP 65	
Tests / approvals			
EMC		DIN EN 60947-5-9	
		DIN EN 61000-6-3	
Vibration resistance		DIN EN 60068-2-6	5 g (55...2000 Hz)
MTTF	[years]	213	
Mechanical data			
Weight	[g]	539.5	
Housing		rectangular	
Dimensions	[mm]	114.1 x 45 x 98.2	
Materials		PBT-GF20; PC; stainless steel (304/1.4301); FKM	
Materials (wetted parts)		stainless steel (316 / 1.4401); stainless steel (304/1.4301); ceramics glass passivated; PEEK; polyester; FKM	
Process connection		threaded connection G 1 internal thread	

SD0523

Compressed air meter

SDD11DGXFPKG/US-100

Probe diameter	[mm]	12
Installation length EL	[mm]	35.5

Displays / operating elements

Display	Display unit	4 x LED, green (Nm³/min, Nm³/h, Nm³, °C)
	function display	1 x LED, green
	switching status	2 x LED, yellow
	measured values	alphanumeric display, 4-digit
	programming	alphanumeric display, 4-digit

Remarks

Remarks	Measuring, display and setting ranges refer to the standard volume flow according to DIN ISO 2533.
	D = inside pipe diameter
Pack quantity	1 pcs.

Electrical connection

Connector: 1 x M12; coding: A; Contacts: 4



Connection

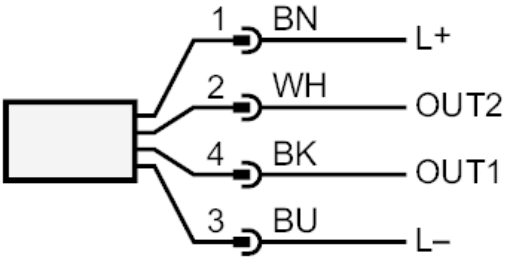

OUT1: Flow monitoring / quantity meter / Preset counter
IO-Link
OUT2: Flow monitoring / Temperature monitoring
input counter reset
colours to DIN EN 60947-5-2
Core colours :

BK = black
BN = brown
BU = blue
WH = white

SD0523

Compressed air meter

SDD11DGXFPKG/US-100

Diagrams and graphs

final value of the measuring range
referred to the internal pipe diameter

