PN5001

Pressure sensor with display

PN-250-SBR14-HFPKG/US/ /V

Article no longer available - archive entry

Alternative articles: PN7071

When selecting an alternative article and accessories please note that technical data may differ!

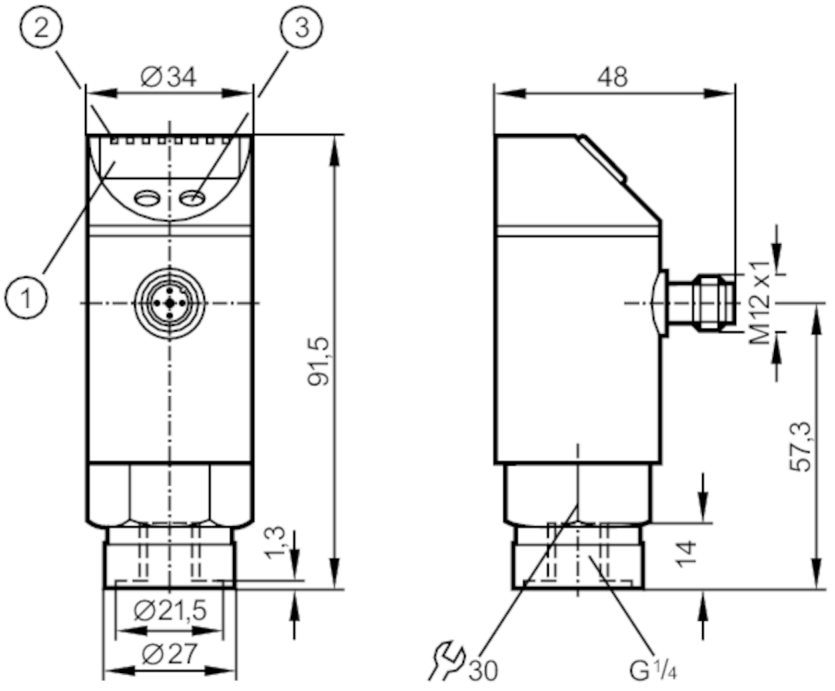

1 alphanumeric display 4-digit
2 LEDs Display unit / switching status
3 programming button

Product characteristics				
Number of inputs and outputs		Number of digital outputs: 1		
Measuring range		0...250 bar	0...3625 psi	0...25 MPa
Process connection		threaded connection G 1/4 internal thread		
Application				
Special feature		Gold-plated contacts		
Application		for industrial applications		
Media		liquids and gases		
Conditionally suitable for		use in gases at pressures > 25 bar only on request		
Medium temperature	[°C]	-25...80		
Min. burst pressure		850 bar	12300 psi	85 MPa
Pressure rating		400 bar	5800 psi	40 MPa
Type of pressure		relative pressure		
Electrical data				
Operating voltage	[V]	18...36 DC; (to SELV/PELV)		
Current consumption	[mA]	< 50		
Min. insulation resistance	[MΩ]	100; (500 V DC)		

PN5001

Pressure sensor with display

PN-250-SBR14-HFPKG/US/ /V

Protection class		III		
Reverse polarity protection		yes		
Overvoltage protection		yes; (< 40 V)		
Power-on delay time	[s]	0.3		
Integrated watchdog		yes		
Inputs / outputs				
Number of inputs and outputs		Number of digital outputs: 1		
Outputs				
Total number of outputs		1		
Output signal		switching signal		
Electrical design		PNP		
Number of digital outputs		1		
Output function		normally open / normally closed; (parameterisable)		
Max. voltage drop switching output DC	[V]	2		
Permanent current rating of switching output DC	[mA]	250		
Switching frequency DC	[Hz]	< 170		
Short-circuit protection		yes		
Type of short-circuit protection		pulsed		
Measuring/setting range				
Measuring range		0...250 bar	0...3625 psi	0...25 MPa
Set point SP		2...250 bar	40...3620 psi	0.2...25 MPa
Reset point rP		1...249 bar	20...3600 psi	0.1...24.9 MPa
In steps of		1 bar	20 psi	0.1 MPa
Factory setting			SP1 = 63 bar	rP1 = 58 bar
Accuracy / deviations				
Switch point accuracy	[% of the span]	< ± 0,5		
Repeatability	[% of the span]	< ± 0,1; (with temperature fluctuations < 10 K)		
Characteristics deviation	[% of the span]	< ± 0,25 (BFSL) / < ± 0,5 (LS); (BFSL = Best Fit Straight Line; LS = limit value setting)		
Hysteresis deviation	[% of the span]	< ± 0,25		
Long-term stability	[% of the span]	< ± 0,05; (per 6 months)		
Temperature coefficient zero point	[% of the span / 10 K]	0,2; (0...80 °C)		
Temperature coefficient span	[% of the span / 10 K]	0,2; (0...80 °C)		
Response times				
Delay time programmable dS, dr	[s]	0; 0,2...50		

PN5001

Pressure sensor with display

PN-250-SBR14-HFPKG/US/ /V

Software / programming			
Parameter setting options		hysteresis / window; normally open / normally closed; switch-on/switch-off delay; Damping; Display unit	
Operating conditions			
Ambient temperature	[°C]	-20...80	
Storage temperature	[°C]	-40...100	
Protection		IP 67	
Tests / approvals			
EMC		EN 61000-4-2 ESD	4 kV CD / 8 kV AD
		EN 61000-4-3 HF radiated	10 V/m
		EN 61000-4-4 Burst	2 kV
		EN 61000-4-5 Surge	0,5/1 kV
		EN 61000-4-6 HF conducted	10 V
Shock resistance		DIN IEC 68-2-27	50 g (11 ms)
Vibration resistance		DIN IEC 68-2-6	20 g (10...2000 Hz)
Mechanical data			
Weight	[g]	261.6	
Housing		cylindrical	
Dimensions	[mm]	Ø 34 / L = 91.5	
Materials		stainless steel (304/1.4301); stainless steel (316L/1.4404); PC; PBT; PEI; FKM	
Materials (wetted parts)		stainless steel (303/1.4305); ceramics; FKM	
Min. pressure cycles		100 million	
Process connection		threaded connection G 1/4 internal thread	
Displays / operating elements			
Display		Display unit	3 x LED, green
		switching status	LED, yellow
		function display	alphanumeric display, 4-digit
		measured values	alphanumeric display, 4-digit
Remarks			
Pack quantity		1 pcs.	

Electrical connection

Connector: 1 x M12; coding: A; Contacts: 4, gold-plated



PN5001

Pressure sensor with display

PN-250-SBR14-HFPKG/US/ /V

Connection

