HOPPECKE
POWER FROM INNOVATION

Installation, commissioning and operating instructions

grid | Xtreme VR

www.hoppecke.com

Table of contents

1 Preface 4
2 Safety notices 5
2.1 Explanation of the symbols used in the manual 5
2.2 Explanation of the symbols used on the battery 5
2.3 General information 6
2.4 Personal Protective Equipment, Safety Clothing, Equipment 7
2.5 Safety precautions 7
2.5.1 Sulfuric acid 7
2.5.2 Explosive Gase 8
2.5.3 Electrostatic discharges 8
2.5.4 Electric shock and burns 9
3 General information 10
3.1 Specifications 10
3.2 Disposal and Recycling 11
3.3 Service 12
3.4 Warranty 12
3.5 References to the standards and regulations 12
3.6 CE and UKCA marking 14
4 Transport 14
4.1 General information 14
4.2 Delivery completeness and externally visible damage 15
4.3 Defects 15
5 Storage 15
5.1 General information 15
5.2 Storage time 16
5.3 Recharging 16
6 Installation 17
6.1 Requirements for the installation site 17
6.1.1 Ventilation of the battery room 19
6.1.1.1 Avoidance of explosion hazards 19
6.1.1.2 Calculating Ventilation Requirements for Battery Rooms 19

6.1.2 Calculating the safety distance 21
6.2 Tools and equipment to carry out the installation 22
6.3 Commissioning and maintenance protocol 23
6.4 Installing racks and cabinets 24
6.5 General information on connecting the batteries 25
6.6 Installing the batteries 26
6.6.1 Inserting batteries into the racks 26
6.6.2 Horizontal Installation 27
6.6.3 Open-circuit voltage measurement 28
6.6.4 Connecting batteries 28
6.6.4.1 Connection Terminals 29
6.6.4.2 Type of connecting cables 29
6.6.5 Connect batteries to battery connectors 30
6.6.6 Installing the screw connectors 30
6.6.7 Connect the battery system to the DC power supply 31
6.7 Commissioning charge (initial charge) 32
6.7.1 Commissioning charge with constant voltage (IU characteristic curve) 33
6.7.2 Extended commissioning charge 33
7 Battery operation 33
7.1 Modes 33
7.1.1 Standby parallel operation 34
7.1.2 Floating operation 34
7.1.3 Switch mode operation (charge/discharge operation) 35
7.2 General information on the operation 35
7.2.1 Discharging 36
7.2.2 Charging – General 37
7.2.3 Float charging 38
7.2.4 Equalizing charge (correction charge) 39
8 Battery maintenance 40
8.1 Cleaning the battery 41
8.2 Check the battery system 41
8.2.1 Preparing the battery system for capacity testing 41

8.2.2 General information on how to carry out the capacity check 43
8.2.3 Implementation of the capacity test and evaluation 44
8.3 Notes on impedance measurement 46
9 Troubleshooting 46
9.1 Scattering of the individual cell voltages 46
9.2 Available capacity too low 47
9.3 Insulation resistance too low 47
9.4 Battery voltage not measurable 47
9.5 Replacement of a cell/battery in the string 48
10 Disassembly 49

1 Preface

Dear customer,

Thank you very much for choosing a product from our company.

Before carrying out any activities related to lead-acid batteries, we ask you to read this documentation carefully and calmly. It contains important information on the safe and professional unpacking, storage, installation, commissioning, operation and maintenance of lead-acid batteries. Failure to follow the safety instructions can lead to serious personal injury and property damage. We assume no liability for direct and indirect damage resulting from improper handling and any warranty claim expires.

We reserve the right to make changes to the content of this documentation. HOPPECKE Batterien GmbH & Co. KG is not liable for any errors in this documentation. Liability for indirect damages arising in connection with the use of this documentation is also excluded. Our products are constantly evolving. Therefore, there may be discrepancies between the representations in this documentation and the product you purchased.

Please keep this documentation in such a way that it is immediately available to all persons who need to carry out activities related to the batteries.

If you have any questions, we will be happy to help you. You can reach us at the following e-mail address:
info@hoppecke.com
or by telephone on working days between 8.00 a.m. and 4.00 p.m. (CET) at
Phone +49(0)2963 61-0
Fax +49(0)2963 61-481.

Your team of
HOPPECKE Batterien GmbH & Co. KG

Mailing address:
HOPPECKE Batterien GmbH & Co. KG
Postfach 11 40
D-59914 Brilon

Address headquarters:
HOPPECKE Batterien GmbH & Co. KG
Bontkirchener Straße 1
D-59929 Brillon-Hopecke
Telephone +49(0)2963 61-0
Fax +49(0)2963 61-449
Internet www.hoppecke.com
E-Mail info@hoppecke.com

2 Safety notices

When handling the batteries and their components, observe the following safety instructions. Please also note the information in the ZVEI leaflet "Information on the safe handling of lead-acid batteries (lead-acid batteries)".

2.1 Explanation of the symbols used in the manual

Danger!	There is a risk to the health of persons, to the battery(s) or to the environment. Failure to comply with these hazard warnings can result in serious injury or even death.		Danger from explosion, pressure waves, hot or molten substances flying around. Explosion and fire hazard, avoid short circuits. Failure to comply with these hazard warnings can result in serious injury or even death.
Attention!	There is a risk to the battery(s), to objects or to the environment. Dangers to people are not to be expected. Failure to do so may result in malfunctions and damage to the battery(s). Furthermore, property damage and environmental damage can occur.		Risk of chemical burns due to leaking electrolyte. Electrolyte is highly corrosive.
	Danger to life and health due to electrical voltages. Failure to comply with these hazard warnings can result in serious injury or even death.		Warning of battery hazards.
	Recycling/Reuse		No smoking. No open flame, embers or sparks near the battery, as there is a risk of explosion and fire.
	Use protective clothing		Wear conductive footwear.
	Use eye protection		Use face shields
	Use handguards		Hint
	Lead-acid batteries that are not used in the recycling process must be disposed of as hazardous waste in compliance with all regulations.		Take first aid measures

2.2 Explanation of the symbols used on the battery

	Warning of a danger spot.		Danger of explosion. Avoid short circuits

	Danger from electrical voltage.		Risk of chemical burns due to leaking electrolyte.
	Wear safety goggles when handling battery cells/blocks.		Avoid open flames and sparks.
	Observe the operating instructions for assembly, commissioning and operation.		Battery with low antimony content.
Pb	Used batteries that cannot be recycled must be disposed of as hazardous waste in compliance with all regulations.		Recycling/Reuse

2.3 General information

As a result of damage to the battery housing, very small amounts of electrolyte or hydrogen gases can escape from sealed lead-acid batteries. Therefore, always follow the usual safety precautions for handling lead-acid batteries.

Attention!

Lead-acid batteries contain lead metal (CAS No. 7439-92-1), a substance on the REACH Candidate List.

Danger!

Improper use of the products described here may result in personal injury and property damage.
In the event of improper use, HOPPECKE assumes neither responsibility nor liability for direct or indirect personal injury or property damage resulting from the handling of the products described here.

Attention!

Without proper and regular maintenance of the batteries by HOPPECKE specialists (or personnel trained by HOPPECKE), the safety and reliability of the power supply in an emergency may not be guaranteed.

Danger!

Work on batteries, in particular their installation and maintenance, may only be carried out by trained HOPPECKE specialist personnel (or personnel trained by HOPPECKE) who are familiar with the handling of batteries and know the necessary precautions.

Please also observe all regulations, writings and standards, as described in chap. 3.5 .

Danger!

Risk of fire, explosion or burns. Do not disassemble, heat above 45°C or burn.

2.4 Personal Protective Equipment, Safety Clothing, Equipment

When working on batteries, wear face protection (impact-resistant visor according to EN 166 Class F or comparable), safety goggles, protective gloves and protective clothing!
Observe the accident prevention regulations as well as DIN EN 50110-1 and IEC 62485-2 (stationary batteries) or IEC 62485-3 (traction batteries).

When handling lead-acid batteries, at least the following equipment must be available:

- Voltage-insulated tool
- Rubber gloves
- Safety shoes
- Fire extinguisher
- Rubber apron
- Goggles
- Face protection (impact-resistant visor according to EN 166 class F or comparable)
- Face mask
- Emergency eyewash (recommended)

To avoid electrostatic charging when handling batteries, textiles, safety shoes and gloves must have a surface resistance < 10^8 ohms and an insulation resistance ≥ 10^5 ohms (see IEC 62485-2 and DIN EN ISO 20345:2011
Personal protective equipment – safety shoes). If possible, wear so-called ESD shoes.

Danger!

Put down watches, rings, necklaces, jewelry and other metal objects when working with batteries.
Never smoke in the immediate vicinity of batteries, handle open flames or generate sparks.
Never place tools or metal parts on batteries.

The use of proper tools and protective equipment can prevent injuries or mitigate the consequences of injury in the event of an accident.

2.5 Safety precautions

2.5.1 Sulfuric acid

Sealed lead-acid batteries are safe when handled properly. However, they contain dilute sulfuric acid (H_2SO_4), which is bound in gel or fleece. The bound sulfuric acid can cause severe chemical burns and serious injuries.

2.5.2 Explosive Gase

Danger!

Inside lead-acid batteries is an explosive hydrogen/oxygen-gas mixture that can leak out of the battery. In the event of an explosion of the mixture, serious personal injury can occur due to flying particles.

- Always wear prescribed protective clothing (face protection (impact-resistant visor according to EN 166 Class F or comparable), safety goggles, voltage-insulating gloves and safety shoes, etc.)
- Use only proper tools ("non-sparking", with voltage-insulated handles, etc.)
- Prevent any ignition sources such as sparks, flames, arcs
- Prevent electrostatic discharge. Wear cotton clothing and ground yourself, if necessary, when working directly on the batteries

Danger!

In the event of a fire, extinguish exclusively with water or CO_2! Do not point the fire extinguisher directly at the battery(s) to be extinguished. There is a risk that the battery housing will crack as a result of thermal stress. Furthermore, there is a risk of explosion due to possible static charges on the battery surface. Turn off the battery charging voltage.
Use breathing apparatus with a self-sufficient breathing air supply during extinguishing work. When using extinguishing water/foam, there is a risk of reactions with the electrolyte and, as a result, violent splashing. Therefore, wear acid-resistant protective clothing.
When plastic material is burned, toxic fumes can be produced.
In this case, leave the scene of the fire as quickly as possible, unless you are wearing the above-mentioned breathing apparatus.

Danger!

When using CO_2 fire extinguishers, there is a risk that the battery will explode as a result of static charge!
Please also note the information in the ZVEI leaflet "Information on the safe handling of lead-acid batteries (lead-acid batteries)".

2.5.3 Electrostatic discharges

All lead-acid batteries develop hydrogen and oxygen gas, also known as oxyhydrogen gas, during operation, but especially during charging. These gases escape from the batteries into the environment. In the case of natural or forced ventilation, which must always be provided, it must be assumed that an ignitable hydrogen-oxygen-gas mixture is only present in the vicinity of the battery cell openings. Inside the battery housing itself there is always an ignitable hydrogen-oxygen-gas mixture.

This is true regardless of battery technology, design or manufacturer and is typical of all lead-acid batteries. The energy required to ignite oxyhydrogen is very low and can be released or supplied in the following ways:

Open flames or fire, smoldering sparks or flying sparks during grinding work, electrical sparks from switches or fuses, hot surfaces > 200 °C and – an often-underestimated cause – electrostatic discharges.

Measures to avoid oxyhydrogen ignition due to electrostatic discharges:

Please note the following points to avoid electrostatic discharge on the battery, your body or your clothing:

- Do not rub the battery with dry cloth, especially not with a cloth made of synthetic material! Rubbing on plastic surfaces (battery housings are usually made of plastic) generates electrostatic charges.
- Clean battery surfaces only with cotton cloths moistened with water. When wiping with moistened cotton cloths, no charges are built up.
- When working on batteries, avoid letting your clothing (e.g. wool) rub against the battery, as this can build up electrostatic charges on the battery housing or on your body or clothing.
- Wear shoes and clothing with special surface resistance to avoid electrostatic charges on your body or clothing.
- Do not remove labels stuck to the battery without special safety precautions. Removing or peeling plastic labels from plastic surfaces can lead to the accumulation of electrostatic charges, which can ignite oxyhydrogen when discharged.

Wipe the battery with a damp cloth before removing the label.

2.5.4 Electric shock and burns

Danger!

Before making the connections, check the correct polarity of the batteries!

Batteries can cause severe electric shocks. In the event of a short circuit, very high currents can flow. Do not touch bare battery parts, connectors, terminals and poles. In the case of battery installations with a nominal voltage of more than 1500 V DC, devices for separation into groups of cells of less than 1500 V DC must be available. Be very careful when working on the battery system to prevent serious injury from electric shock and burns.

Always wear prescribed protective clothing (voltage-insulating rubber gloves, rubber shoes, etc.) and only use tools that are made of non-conductive material or are stress-insulated.

Put down watches, rings, necklaces, jewelry and other metal objects when working with batteries.

Before performing any work on the battery system:

Check if the battery system is grounded, which we generally do not recommend. If this is the case, disconnect the connection. Unintentional contact with a grounded battery can result in severe electric shock. This risk can be significantly reduced without an earth connection. The racks or cabinets used to hold batteries must be properly grounded or fully insulated in accordance with IEC 62485-2.

In the case of a grounded battery system …

There is tension between the earth and the ungrounded pole. If this pole is touched by a grounded person, there may be a danger to life! There is also a risk of a short circuit if dirt and acid deposits on the ungrounded terminal come into contact with the battery rack.

If there is an (unintentional) additional ground fault via some cells within the (grounded) battery system, there is a risk of short circuits or fire and explosion.

In the case of an ungrounded battery system …

If there is an unintentional ground fault within the battery system, there is an electrical voltage between the earth and the ungrounded pole. The voltage can sometimes be dangerously high – danger to life due to electric shock.

If there is also a second unintentional earth fault, there is a risk of short circuit or fire and explosion.

If you have any questions about the above or any other questions related to safety when working on a battery system, please contact your local HOPPECKE dealer. Alternatively, you can reach us directly at the head office.

3 General information

The HOPPECKE grid | Xtreme VR series are maintenance-free VRLA batteries with a nominal voltage of 12 V.

3.1 Specifications

Each cell/battery block has its own nameplate on the top of the cell/block cover. Below is an example.

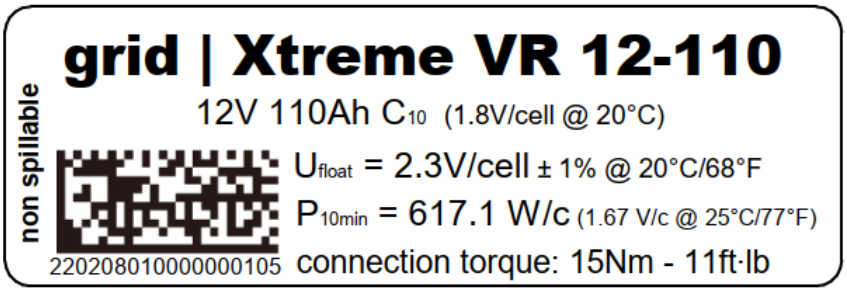

Figure 3-1 - Nameplate

The details on the nameplate are: grid | Xtreme VR 12-110

12 V	= Nominal voltage
110 Ah	= Capacity according to DIN C_{10}
Ufloat	= Float charge voltage
P_{10min}	= Power
Connection torque:	= Tightening torque

3.2 Disposal and Recycling

Used batteries with this symbol are recyclable assets and must be fed into the recycling process.

Used batteries that are not used in the recycling process must be disposed of as hazardous waste in compliance with all regulations.

HOPPECKE offers its customers its own battery take-back system. Taking into account:

- Of the Circular Economy and Waste Act
- The Battery Regulation
- The Transport Permit Ordinance
- In accordance with the principles of general environmental protection and our corporate guidelines, we supply all lead-acid batteries to the secondary lead smelter at the Hoppecke site.

The HOPPECKE metal smelter is the only lead smelter in Europe to be successfully certified according to:

- DIN EN ISO 9001 (Procedures and Procedures)
- DIN EN ISO 14001 (Environmental Audit)
- Waste Management Company Ordinance for Waste Management Specialist with all associated waste codes for storage, treatment and recycling.

For more information, please call: +49(0)2963 61-280.

3.3 Service

HOPPECKE has a worldwide service network that you should take advantage of. The HOPPECKE service is available to you if you would like to have professional supervision during the installation of the battery system, if you need parts or accessories or if maintenance work must be carried out on the system. Please contact us or your local HOPPECKE contractual partner about this.

The HOPPECKE service number is:
Phone +49(0)800 246 77 32
Fax +49(0)2963 61-481
E-Mail service@hoppecke.com

3.4 Warranty

Commissioning and maintenance must be documented. For this, you can use our template, which you can find here:

service_maintenance_comissioning_protocoll_en_de.pdf (hoppecke.com)

or via the QR code:

Alternatively, you can use your own templates, as long as they contain the necessary data fields. This documentation should be kept together with the other battery documentation.

Note: Acid density fields are not required for VRLA (sealed lead-acid batteries) products and can be left empty.

For warranty claims, the documentation must be submitted to the manufacturer. Battery performance and service life, especially in terms of charging, temperature and cycles, affect the warranty. The customer/battery operator must prove that the parameters were within the recommended ranges. The protocols must be made available to the manufacturer. The service life only applies under optimal conditions.

HOPPECKE recommends the use of a stationary battery monitoring system. For more information, please contact your local HOPPECKE representative.

3.5 References to the standards and regulations

The references to the applicable standards, regulations, etc. should help you to install and use the HOPPECKE products correctly. However, it is not possible to always cite all regulations and applicable standards according to the current edition. Therefore, these

instructions are to be understood as support and not as direct instructions. In order to implement the requirements of the standards/regulations, the current and applicable standard or regulation must be available, regardless of the edition of the standard/regulation manually quoted here in HOPPECKE.

Please note the following regulations (IEEE standards only apply to the USA):

- ZVEI publication “Instructions for the safe handling of electrolyte for lead-acid accumulators”
- VDE 0510 Part 2: 2001-12, in accordance with IEC 62485-2: “Safety requirements for secondary batteries and battery installations – Part 2: Stationary batteries”
- DIN EN 50110-1 (VDE 0105-1): “Operation of electrical installations”; German version EN 50110-1:2004
- IEEE Standard 485-1997: “Recommended Practice for Sizing Large Lead Acid Storage Batteries for Generating Stations”
- IEEE Standard 1187-2002: “Recommended Practice for Installation Design and Installation of Valve Regulated Lead-Acid Storage Batteries for Stationary Applications”
- IEEE Standard 1188-2005: “Recommended Practice for Maintenance, Testing and Replacement of Valve Regulated Lead-Acid (VRLA) Batteries for Stationary Applications”
- IEEE Standard 1189-2007: “Guide for Selection of Valve-Regulated Lead-Acid (VRLA) Batteries for Stationary Applications”
- IEEE Standard 1375-1998: “Guide for Protection of Stationary Battery Systems”

When working on batteries, always observe the safety regulations documented in DIN EN 50110-1 “Operation of electrical installations”:

  - Always proceed in the correct order when installing and removing the battery and when connecting it to the charger
  - Pay attention to polarity.
  - Make sure that the connections are tight.
  - Only use technically flawless charging cables in sufficient cross-sections.
  - Batteries must not be connected or disconnected while power is flowing, or the charger is on.
  - Before opening the charging circuit, check the switched off state of the charger by voltage measurement.
  - Secure the charger against reconnection.
  - Observe the operating instructions of the charger manufacturer.

3.6 CE and UKCA marking

For batteries that cover a voltage range of 4 V to 1500 V DC, a CE declaration of conformity is required in accordance with the Battery Regulation EU 2023/1542. In addition, the requirements of the Low Voltage Directive 2014/35/EU must be observed for battery systems with a nominal voltage of 75 V to 1500 V DC. The labelling requirement also applies to the UK, but the associated declarations of conformity must bear the UKCA mark by 31.12.2024 in accordance with The Electrical Equipment (Safety) Regulations 2016. The installer of the battery system is responsible for issuing the CE or UKCA declaration and affixing the CE or UKCA marking on or next to the battery's nameplate.

Use the QR code or this link to access the performance and lifetime data provided in accordance with Battery Regulation EU2023/1542 (Attachment IV, Part A):

4 Transport

4.1 General information

We pack the batteries that are shipped with the greatest possible care so that they arrive undamaged. Nevertheless, we strongly recommend that you inspect the delivery immediately upon arrival for any transport damage.

Filled lead-acid batteries are not treated as dangerous goods during road transport if:

- They are undamaged and leak-proof
- They are protected against falling over, slipping and short circuits
- They are firmly bound to a pallet
- There are no dangerous traces of acid or alkali etc. on the outside of the package

Danger!

When transporting trucks, careful load securing is essential!

Attention!

Block batteries/cells have a high weight (depending on the type between approx. 3 kg and max. 1100 kg per cell/block), please use safety shoes. Use only suitable transport equipment for transport and assembly!

4.2 Delivery completeness and externally visible damage

Check the delivery for completeness immediately after arrival, while the carrier is still present, using the delivery note. Pay special attention to the number of battery pallets and the boxes with accessories. Then check the goods for possible transport damage.

Make a note if necessary

- Damage to the outer packaging
- Visible stains or moisture that could indicate leaked electrolytes

In the event of incomplete delivery or transport damage

- Write a short defect report on the delivery note before signing it
- Ask the carrier for an audit and make a note of the name of the examiner
- Write a defect report, which you will forward to us and the forwarding company within 14 days

4.3 Defects

Take all necessary safety measures to avoid electric shock. Remember that you are handling energized batteries!

Unpack the goods as soon as possible after delivery and check them for defects, especially if commissioning is planned soon.

Check the entire scope of delivery using the detailed delivery note (or packing list). If defects or incompleteness are reported to the carrier too late, this may result in the loss of your claims. If you have any questions in connection with incompleteness of the delivery or damage to the delivered products, please contact your local HOPPECKE contractual partner. Alternatively, you can reach us directly at the head office.

5 Storage

5.1 General information

After receiving them, you should unpack, install and charge the batteries as soon as possible. If this is not possible, store the batteries in a fully charged state in a clean, dry, cool and frost-free room and do not expose the batteries to direct sunlight. During storage, batteries lose capacity due to self-discharge. High storage temperatures increase self-discharge and reduce the permissible storage time.

Attention!

Do not stack the pallets with the batteries, as this may cause damage that is not covered by the warranty.

5.2 Storage time

Attention!

The maximum storage time for grid I Xtreme VR batteries before recharging is required, as well as the recommended open circuit test intervals, are:

Temperatur (°C/°F)	Storage period (months)	Open-circuit voltage OCV test intervals (months)
+10/+50	48	6
+15/+59	34	6
+20/+68	24	4
+25/+77	17	4
+30/+86	12	3
+35/+95	8,5	2
+40/+104	6	2

To calculate the exact time, you should assume the commissioning date in production (according to the imprint on the block). To prevent damage, block batteries must be recharged in accordance with Chapter 5.3 when the open circuit voltage (OCV) approaches the threshold value of 12.45 V per block (2.075 V/cell) or when the maximum storage time is reached, whichever is sooner.

Failure to observe this can lead to sulphation of the electrodes and consequently to a loss of performance and a shorter service life of the battery. Recharging during the storage period should be done a maximum of two times. The battery must then be operated in constant charge maintenance. The useful life of the battery(s) begins with delivery from the HOPPECKE factory. Storage times on site are to be fully credited towards the useful life.

If a longer storage period (e.g. several months) is planned, it is recommended that you obtain a suitable charger in good time so that the above-mentioned recharging can be carried out. The batteries should be arranged in such a way that they can be provisionally connected in series for charging. Leave them on their pallets until they are finally installed.
If batteries need to be cleaned during storage, never use detergents, but cotton cloths soaked in water without additives.
Failure to comply with the recharging intervals voids the warranty claim.

5.3 Recharging

Perform the recharge as follows:

1. The permissible temperature range for recharging is 15°C to 35°C.
2. Charging with IU characteristic curve, up to max. 2.40 V/cell up to 24 hours. The charging current must not be higher than 20 A per 100 Ah nominal capacity.

3. When charging temporarily connected batteries, make sure that there is sufficient ventilation (see chap. 6.1.1).

Attention!

If the maximum storage time is exceeded and/or at higher average storage temperatures, charge acceptance may be more difficult during recharging. In such cases, HOPPECKE recommends the use of an advanced charging method that ensures gentle and complete recharging of the blocks/cells.

Advanced charging method:
Charge with const. current of 1 A or 2 A per 100 Ah C_{10} battery capacity. Termination of charge when all cell voltages have risen to at least 2.65 V/cell.

6 Installation

6.1 Requirements for the installation site

If you have any questions about the installation of the battery system, please contact your local HOPPECKE dealer. Alternatively, you can reach us directly at the head office.

When determining the installation location and space requirements and when carrying out the installation work, please refer to the valid installation drawing, if available. The floor must be suitable for the installation of the batteries, i.e:

- Suitable load capacity
- Electrolyte-resistant installation surface (otherwise use of acid drip trays) with vented batteries
- Sufficient conductivity of the floor against the grounded point, measured according to IEC 61340-4-1:
    - for a nominal voltage of the battery ≤ 500 V: 50 kΩ ≤ R ≤ 10 MΩ
    - for a nominal voltage of the battery > 500 V: 100 kΩ ≤ R ≤ 10 MΩ
- At ground level
- As vibration-free as possible (otherwise the use of special racks is necessary)

Within the EU, follow VDE 0510-485-2: April 2019, corresponding. IEC 62485-2 "Safety requirements for batteries and battery installations – Part 2: Stationary batteries".

Table 6.1-1 - Installation site requirements

Request	Our recommendation
Ventilation	Danger! Sufficient room ventilation is absolutely necessary to keep the hydrogen concentration (H_2 concentration) in the room air of the battery room at a value < 4% by volume.

	Hydrogen is lighter than air! It is imperative to ensure that hydrogen accumulation (e.g. in the ceiling area) cannot occur. Ventilation openings should therefore be installed in the immediate ceiling area.
Environment	The environment must be clean and dry. Water, oil and dirt residues on the cell surface must be avoided and, if necessary, removed immediately.
Aisle width/ minimum distances	See IEC 62485-2
Access door	Lockable and fire retardant (T90).
Lighting	Recommendation: at least 100 lx.
Marking	Warning signs corresponding. IEC 62485-2. Warning of electrical voltage is only necessary if battery voltage is > 60 V DC.
Danger of explosion	No ignition sources (e.g. open flames, bulbs, electrical switches, sparks) in the vicinity of the cell openings.
Ambient temperature	The specified operating temperature is 20 °C (based on IEC 60896). Higher temperatures shorten the service life. All technical Dates apply to the nominal temperature of 20 °C. Lower temperatures reduce the available capacity. Exceeding the limit temperature of 55 °C is not permitted. Continuous operating temperatures of 45 °C or more must be avoided. Batteries must not be exposed to direct sunlight or other heat sources.
Ambient air	The air in the battery compartment must be free of contaminants, such as suspended solids, metal particles or flammable gases. The humidity should be a maximum of 85%.
Insulation resistance	The minimum insulation resistance between the battery circuit and other local conductive parts must be greater than 100 Ω per volt (the nominal voltage of the battery).
Earthing	If the racks or battery cabinets are to be grounded, there must be a connection to a reliable earthing point.
Accommodation of the batteries	We recommend the proper installation of the batteries in HOPPECKE battery racks or cabinets. The use of operator-owned solutions may void the warranty for batteries.
Country-specific. regulations	In some countries, it is mandatory that racks with the batteries be installed in drip trays. Please observe the local regulations and, if necessary, contact your local HOPPECKE contractual partner.

6.1.1 Ventilation of the battery room

It must be ensured that the requirements of IEC 62485-2 regarding installation and ventilation are complied with. If, during commissioning charging, the charging current is higher than the current used as a basis for the design of the ventilation equipment, the ventilation of the battery room must be increased for the duration of commissioning and for one hour thereafter in accordance with the charging current used, e.g. by means of portable auxiliary fans. The same applies to occasional special charging treatments of batteries.

6.1.1.1 Avoidance of explosion hazards

As the gases produced when charging batteries cannot be avoided, the hydrogen concentration must be diluted by sufficient ventilation. Spark-generating equipment is not permitted in the vicinity of batteries.

Ignition sources for oxyhydrogen explosions can be:

- Open flame
- Flying sparks
- Electrical, spark-forming equipment
- Mechanical, spark-forming equipment
- Electrostatic charge

Measures to prevent oxyhydrogen explosions:

- Adequate natural or forced ventilation
- No heating with an open flame or incandescent body (T > 300 °C)
- Separate battery compartments with separate ventilation
- Antistatic clothing, shoes and gloves (in accordance with the currently valid DIN EN 1149-1)
    - Surface leakage resistance < 10^8 Ω and insulation resistance ≥ 10^5 Ω
- Hand lamps with mains cable without switch (protection class II)
- Or hand lamps with battery (IP54 protection)
- Warning and prohibition signs

The ventilation requirements for battery compartments, cabinets or compartments result from the required dilution of the hydrogen produced during charging and the safety factors, which include the aging of the battery and the possibility of failure ("worst case").

6.1.1.2 Calculating Ventilation Requirements for Battery Rooms

Air Volume Flow Q:

$$\boldsymbol{Q = v \times q \times s \times n \times I_{Gas} \times \frac{C}{1000Ah}}$$

v = Dilution factor = 96 % air / 4 % H2 = 24

q = Amount of hydrogen produced = 0.42 10–3 m3/Ah hydrogen produced at 0°C (**Note:** For calculations at 25 °C, the value q for 0 °C must be multiplied by a factor of 1.095.)

s = Safety factor = 5

n = Number of cells

I_{Gas} = Gassing current per 100 Ah

C = Nominal capacity of the battery

Summary of factors:

$$v \times q \times s = 0,05$$

$$Q = 0,05 \times n \times I_{Gas} \times \frac{C}{1000Ah} \; mit \; Q \; in \frac{m^3}{h}, I_{Gas} \; in \; A$$

$$I_{Gas} = I_{float} \; bzw. I_{boost} \times f_g \times f_s$$

Table 6.1-2 - Indicative values for current (extract from IEC 62485-2)

Parameter	Lead-acid batteries vented cells Sb < 3 % (antimony content in the positive grid < 3 %)	Lead-acid batteries VRLA cells
f_g: Gas emission factor	1	0,2
f_s: Safety factor for gas emission (includes 10% defective cells and aging)	5	5
U_{float}[1]: Float charge voltage, V/cell	2,23	2,27
I_{float}: Typical float charge current, mA per Ah	1	1
I_{Gas}[2]: Current (float charging), mA per Ah (refers only to the calculation of the air volume flow in float charging)	5	1
U_{boost}: Boost charge voltage, V/Cell	2,4	2,4
I_{boost} Typical boost-charge current, mA per Ah	4	8
I_{Gas}[2]: Current (boost charging), mA per Ah (refers to the calculation of the air volume flow during boost charging)	20	8

[1] Float and boost-charge voltages may vary depending on the specific electrolyte density in lead-acid batteries.

[2] When using grid | AquaGen recombination systems (only with vented lead-acid batteries), the current I_{gas} can be reduced to 50%.

For the ventilation design of battery compartments, "natural ventilation" or "forced ventilation" can be used as a basis depending on the structural conditions.

The following points should be noted:

Natural ventilation:

- Supply and exhaust air openings required
  - Openings on opposite walls
  - Minimum separation distance of 2 m when openings on the same wall
- Minimum cross-section each (Air inlet / outlet): $A \geq 28 \times Q \ \left(A \ in \ cm^2, \mathrm{Q \ in} \ \frac{m^3}{\mathrm{h}}\right)$
  Assumption: $v_{Luft} = 0{,}1 \ \frac{\mathrm{m}}{\mathrm{s}}$
- Ventilation to the outside (not in air conditioning or adjacent rooms)

Forced (artificial) ventilation:

- Increased ventilation with fan (usually suction fan)
- Air flow rate according to the air volume flow Q
- The air sucked in must be clean, Requirements for the installation site
- When charging with heavy gassing, fan run-on of 1 hour is required
- If there are several batteries in a room, the following applies: Air requirement = $\sum Q$
- Prevention of a ventilation short circuit due to sufficient distance between the supply and exhaust air opening
- The ventilation system must be coupled with charger to ensure necessary airflow at all times

6.1.2 Calculating the safety distance

In the vicinity of batteries, the dilution of explosive gases is not always guaranteed. Therefore, a safety distance must be maintained through an air section in which no sparking or glowing equipment must be present (max. surface temperature 300 °C). The spread of the explosive gases depends on the amount of gas released and the ventilation in the vicinity of the gas source. The following equation can be used to calculate the safety distance "d" from the gassing source, assuming a hemispherical spread. The safety distance d can also be read from Figure 6.1-1. The more detailed calculations are shown below.

Safety:

The required safety distance must be calculated in accordance with IEC 62485-2.

Volume of a hemisphere:

Air volume flow required to dilute the produced hydrogen H_2 to max. 4% in the air:

Required radius of hemisphere:

$$V_h = \frac{2}{3} \times \pi \times d^3$$

Air volume flow required to dilute the produced hydrogen H_2 to max. 4% in the air:

$$Q_{Gas} = 0{,}05 \times \langle n \rangle \times I_{Gas} \times C \times 10^{-3} \left(\frac{m^3}{h}\right)$$

$$Q_{Gas} = \frac{V_h}{t}$$

Required radius of hemisphere:

$$d = 28{,}8 \times (\sqrt[3]{n} \times \sqrt[3]{I_{Gas}} \times \sqrt[3]{C}\ (mm)$$

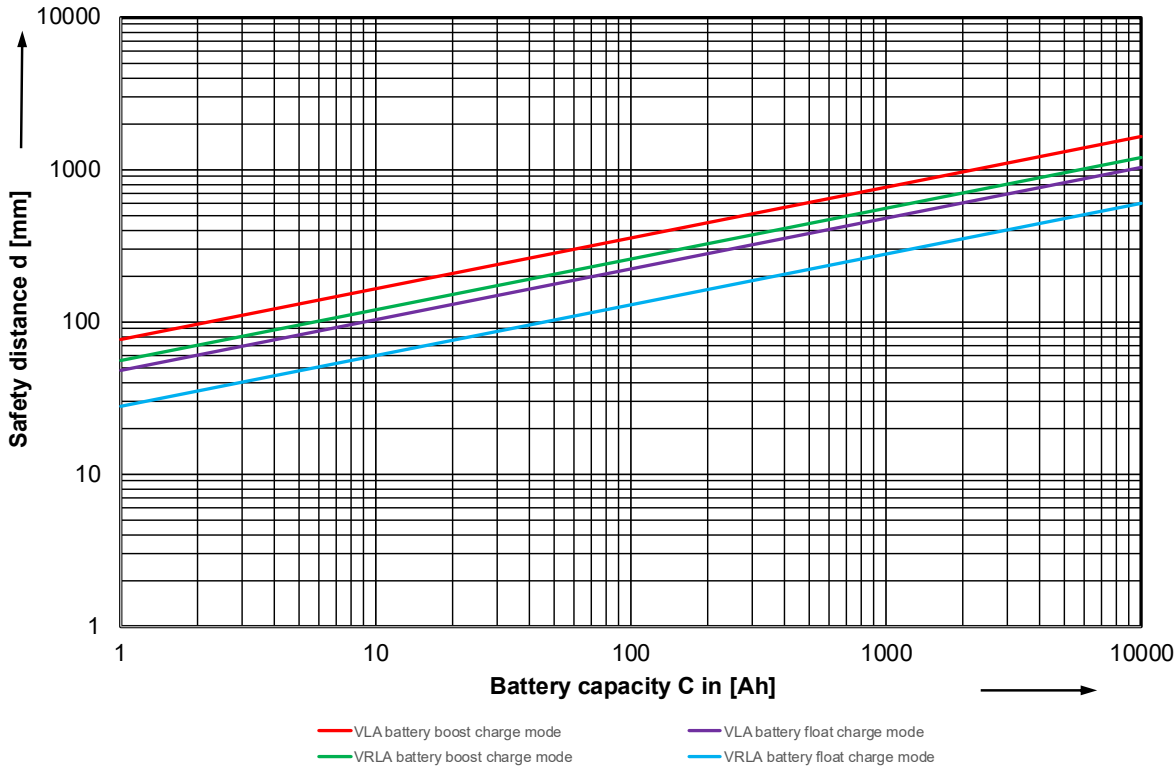

Figure 6.1-1 - Safety distance depending on battery capacity

6.2 Tools and equipment to carry out the installation

The batteries are delivered on pallets, and the necessary accessories are included in separate packaging units. Please note all the information from the previous chapters.

For the installation, you will need your personal protective equipment, safety clothing, safety tools and other equipment, as described in chap. 2.4 .

- Lifting trucks (forklifts, pallet trucks or small mobile cranes or similar to facilitate battery assembly)
- Chalk line and chalk (optional)
- Plastic spirit level (optional)
- Torque wrench
- Supporting elements for aligning the racks (cabinets) (optional)
- Ratchet box (optional)
- Set of open-end wrenches and ring wrenches with insulated handles
- Screwdriver with voltage-insulated handle
- Wiping paper or cloth (made of cotton; do not use synthetic fiber cloths as there is a risk of static electricity), moistened with water
- Tape measure made of plastic
- Safety equipment and clothing
- Aeronix® battery terminal grease (only for cells/blocks with exposed lead poles)
- Insulating mats for covering conductive parts

6.3 Commissioning and maintenance protocol

This must be documented as proof that commissioning and maintenance have been carried out correctly. Alternatively, you can use your own templates for documentation. In any case, these should contain the necessary data/data fields. The documentation of commissioning and maintenance should be kept together with the other documentation of the battery/battery system.

Note: The following template contains fields for documenting acid density – these fields are not used for VRLA (sealed lead-acid batteries) products and can therefore be left blank.

The log can be downloaded as an extra file at:

service_maintenance_comissioning_protocoll_en_de.pdf (hoppecke.com)

or use the QR code:

This documentation must be submitted to the manufacturer as proof in the event of warranty claims.

6.4 Installing racks and cabinets

We recommend the proper installation of the batteries in HOPPECKE battery racks or HOPPECKE battery cabinets. If operator-owned solutions are used, the warranty of the battery(s) may expire. HOPPECKE supplies various types of racks. For information on the assembly, please also refer to the separate documentation that comes with each rack.

Figure 6.4-1 – Tier rack (left) and step rack (right)

1. Using the installation drawing (if available), mark the outlines of the racks on the installation surface with chalk.
2. The installation surface must be level and load-bearing.
3. Set up the racks on a trial basis and align them horizontally.
4. Adjust the spacing of the support rails to match the cell or block battery dimensions.
5. Check the stability of the frames and all screw or clamp connections for tight fit.
6. Ground the racks or frame parts (if provided).

When using wooden frames: Install a flexible connection on each frame joint!

As an alternative to installation in racks, the batteries can also be installed in HOPPECKE battery cabinets. Either the cabinets are delivered with batteries already installed or the batteries are installed in the cabinets on site. HOPPECKE supplies various types of cabinets.

When installing block batteries with L-connectors, it should be noted that the L-connectors must be installed before being placed in the battery cabinet.
Note: The L-connectors are not intended for high-current (UPS) applications. Ask your local HOPPECKE representative about this.

6.5 General information on connecting the batteries

Attention!

When connecting the batteries, always form the series connections first and then the parallel connection. A reverse approach is not permitted. Check the batteries for correct polarity before wiring.

To form the series connections, the batteries are arranged in such a way that the positive pole of one battery is as close as possible to the negative pole of the next battery.

When connecting stationary batteries in parallel, the following points must be observed:

1. Only battery strings of the same length and voltage should be connected to each other. Cross-connections of the individual strands between cells or blocks should be avoided, as they mask bad or faulty cells/blocks and can thus be the cause of overcharging of individual battery strands.
2. Only batteries of the same type and the same state of charge should be connected (same battery type, plate size and plate construction).
3. The environmental conditions for all strings connected in parallel should be identical. In particular, temperature differences between the individual strings/batteries must be avoided.
4. In order to ensure uniform current distribution, the connectors and end connections should be designed in such a way that there are equal resistance ratios in the individual feeds to the consumer.
5. The commissioning date of the batteries should be identical (batteries of the same age, the same service life and the same state of charge).
6. Depending on the application and system voltage, the number of parallel switched battery strings as follows:

   a.) Cyclic operation:

Batteries $\leq 48\ V$	max. 4-6 strings (max. 10 strings – grid | Xtreme VR)
Batteries $> 48\ V$	max. 2 strings (max. 4 strings – grid | Xtreme VR)

   Note: Since the charge factor is usually low in cyclic applications, the risk of insufficient charging increases if the previously mentioned maximum number of parallel battery strings is exceeded.

   b.) Standby parallel operation:

Batteries $\leq 60\ V$	grid | Xtreme VR $\leq 230\ V$	max. 8-10 strings
Batteries $> 60\ V$	grid | Xtreme VR $> 230\ V$	max. 6 strings

In special cases, consultation with Hoppecke is necessary.

If the above points are not met, the strings must be charged separately before the parallel connection is carried out.

6.6 Installing the batteries

The greatest care must be taken when lifting and moving the batteries, as a falling battery can cause personal injury and material damage. Be sure to wear safety shoes and safety goggles. Always lift batteries only from below and never at the poles, as this will result in the destruction of the battery. Check the batteries for perfect condition before installation (visual inspection). When installing the batteries, VDE 0510-485-2: April 2019 (in accordance with IEC 62485-2) must be observed. For example, electrically conductive parts must be covered with insulating mats.

6.6.1 Inserting batteries into the racks

1. Apply some soft soap to the support rails of the frame to make it easier to move the batteries sideways after they have been put down.

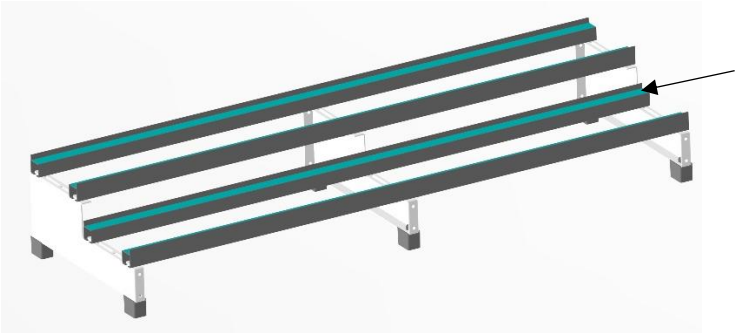

Figure 6.6-1 - Treatment of the support rails

2. Position the batteries in the racks one after the other at the correct angle and with the correct polarity and remove all transportation and lifting aids.

For large batteries, it is convenient to start by mounting them in the middle of the rack. If you are using racks with tiers, first mount the lower level.

Attention!

Carefully place the batteries on the support rails of the frame, otherwise the battery housing may be damaged. When setting down the batteries, avoid at all costs that they collide with each other. Risk of battery destruction!

Danger!

The positive and negative terminals of a cell or block must not be short-circuited under any circumstances. This also applies to the positive and negative terminals of the entire battery or battery string. Be careful, especially when using step racks!

3. Move the blocks (or cells) sideways until the distance is about 10 mm. If connectors are used, they specify the distance. When moving the batteries sideways in the rack, do not press in the middle, but in the area of the (stiffer) corners. Only press by hand, never use tools!
4. Finally, count all cells/block batteries and check that the installation is complete.

6.6.2 Horizontal Installation

When installing the grid | Xtreme VR, the orientation of the electrodes ("Toasted" – plates are upright / "Pancake" – plates lie flat on top of each other) can be freely selected. However, HOPPECKE recommends using the "pancake" variant, as this can actively counteract possible electrolyte stratification during operation.

Care must be taken to ensure that the lids of the battery cells do not rest on the rack or cabinet bottom (6-2). The cells must be inserted very carefully into the battery cabinet to avoid damage to the connection between the jar and the lid.

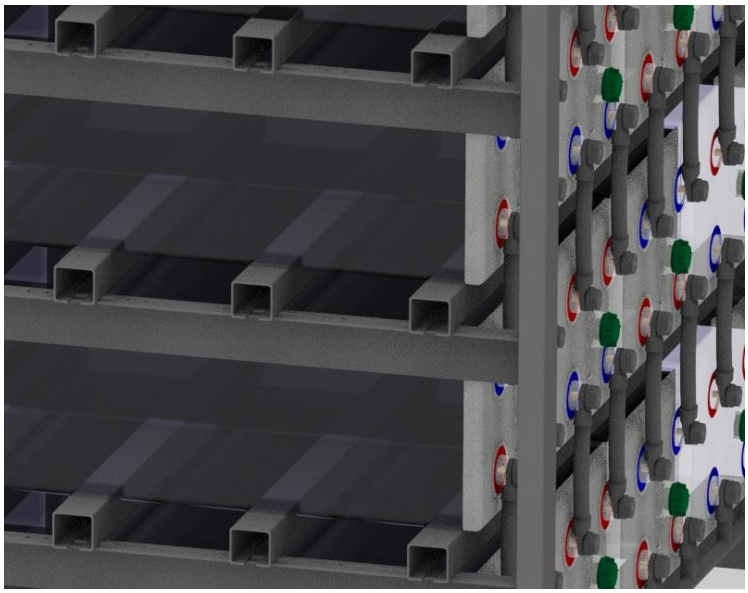

6-2- Correct positioning of the vessel lid connection on a rack

Note on connecting the cells/batteries:

After positioning the cells/blocks in the cabinet/rack, they should be connected using the connectors supplied. If a drawing is available, it should be used as a guide:

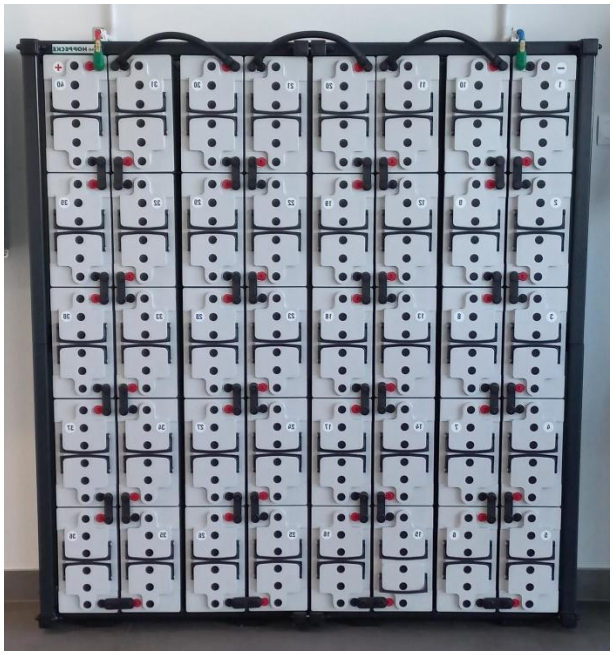

6-3 - Example of horizontal battery arrangement

In the case of a seismic battery cabinet, the stiffening struts should be attached after wiring.

6.6.3 Open-circuit voltage measurement

Before you finally connect the batteries, carry out an open-circuit voltage measurement of the individual block batteries to determine their state of charge and function. Fully charged 12V block batteries have the open-circuit voltages listed in Table 6.6-1 at an electrolyte temperature of 20 °C. The open-circuit voltage of the individual block batteries of a battery must not differ from each other by more than 0.05 V.

Table 6.6-1 - Open-circuit voltage for grid | Xtreme VR Block Batteries

Type of cell/block battery	Open circuit voltage
grid | Xtreme VR	12.78 V ... 13.08 V

It is not necessary to consider the open-circuit voltages in relation to temperature, as their influence is negligible and hardly detectable by measurement.

If the open-circuit voltage is low during storage, the battery should either be recharged as described in chap. 5.3 or put into operation as described in the chap. 6.7. In the event of major deviations, it is necessary to consult your local HOPPECKE contractual partner.

6.6.4 Connecting batteries

The batteries are now in their final position and can be connected.

6.6.4.1 Connection Terminals

Sealed batteries are equipped with connection terminals that have either a brass or copper terminal insert and a plastic coating. This eliminates the need for terminal grease. However, if oxidation is visible on the surface of the terminal inserts, it is important to clean them before putting on the connectors. This is especially true in the case of visible oxidation of the pole insert.

6.6.4.2 Type of connecting cables

The supplied battery system is designed to deliver a specified power (kW) or current (A) at a specified voltage (U) for a certain period of time (standby time). You should be familiar with these parameters (U, kW, A). If this is not the case, please contact your local HOPPECKE contractual partner. The battery system has been designed in such a way that the above performance characteristics are available on the battery terminals. The voltage drop between the battery terminals and the consumers should therefore be kept to a minimum. Too high a voltage drop can lead to a reduced standby time of the battery system.

Therefore, please note the following information:

1. The cable length between batteries and charging rectifier/UPS should be as short as possible.
2. The cable cross-section should be dimensioned in such a way that there is no significant voltage drop even with a large current flow. For this purpose, the voltage drop at nominal current should be calculated based on the intended cable cross-section. If in doubt, choose the next larger cable cross-section.

Danger!

The connecting cables between the end connection poles of the battery system and the battery fuses must be suitable for short-circuit-proof installation and must be laid in a short-circuit-proof manner. This means:

- Routing of cables with simple insulation in separate cable ducts
- Routing of cables with double insulation (e.g. H07RN-F, NSGAFöu) in a common cable duct
- Insulation strength of the cable is above the maximum possible system voltage
- Additional insulation of the connectors is required
- Avoidance of any mechanical stress on the cells or battery terminals. Cables with large cross-sections should be intercepted by cable clamps

The connecting cables between the main connection poles and the charging rectifier or UPS should be designed as flexible conductors.

6.6.5 Connect batteries to battery connectors

There are screwable row connectors, step connectors and tier connectors (cf. Figure 6.6.5-1). The row connectors are used to connect the individual cells/block batteries, the step connectors to connect the individual steps to each other (use of step racks) and the tier connectors to connect the tiers (use of floor racks).

Figure 6.6.5-1 - Use of series and step connectors

6.6.6 Installing the screw connectors

1. The cells or block batteries are connected by isolated row connectors (see Figure 6.6.6-1). The negative pole of a cell or block is connected to the positive pole of the next cell or block until the desired total system voltage is reached.

Attention!

Be careful not to mechanically damage the terminals.

2. Attach the connectors as described in Figure 6.6.5-1 shown. Tighten the screws by hand first to be able to align the cells and connectors again.
3. Tighten the screws with a torque wrench. The prescribed torque is 15 Nm ± 1 Nm.

Attention!

Careful tightening of the connections is essential, as a loose connection can lead to excessive heating, which could result in ignition or explosion.

4. If necessary, install insulating covers for the connectors and the end terminals (connection plates).

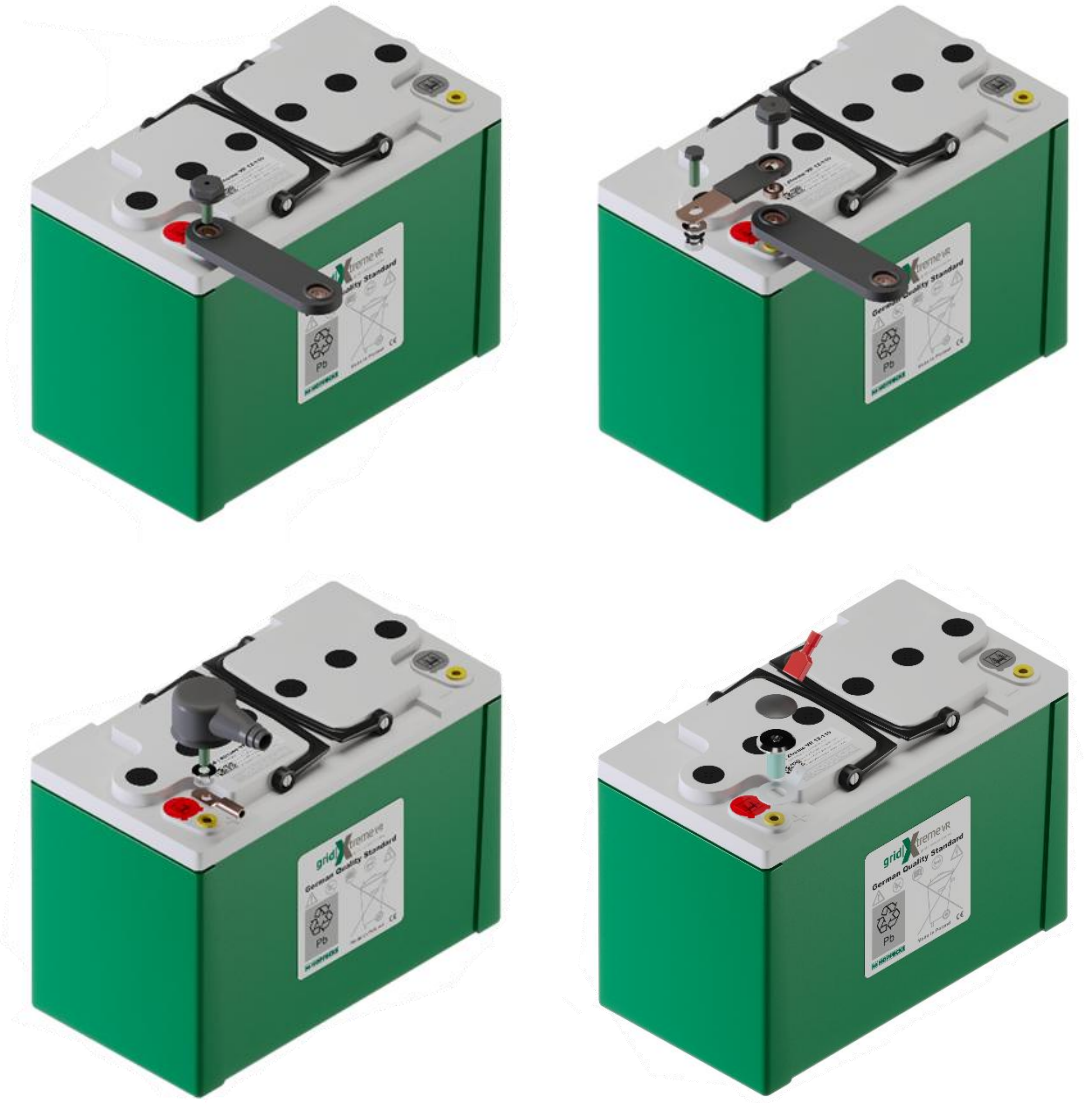

Figure 6.6.6-1 - Pole connection options for Intercell connection (solid and flexible connection), Intermediate connection, Group and end connection and Intercell connection with battery controlling system

6.6.7 Connect the battery system to the DC power supply

Attention!

Before connecting to the charging rectifier or to the UPS, it must be ensured that all assembly work has been completed properly!

1. Measure the total voltage (setpoint = sum of the open circuit voltages of the individual cells or block batteries).
2. If necessary: Provide the cells or block batteries with a continuous numbering in a visible place (from the positive terminal of the battery to the negative terminal). Number stickers are supplied by HOPPECKE.

3. Attach polarity plates to the battery connectors.
4. Fill in the nameplate in the maintenance and commissioning protocol (see chap.6.3) and keep this document with the battery system.
5. Attach the safety signs (these are: "Danger from batteries", "No smoking" and "Danger from voltage if battery voltage > 60 V"). If necessary, additional labels must be affixed in accordance with local regulations.
6. If necessary: Clean the batteries, the racks and the installation room.

Danger!

Never clean batteries with feather dusters or dry cloths made of synthetic fibres! Danger of electrostatic charge and oxyhydrogen explosion! We recommend using slightly damp cotton or paper towels for cleaning.

7. Connect the battery system to the charging rectifier or UPS via the end connections ("plus to plus" and "minus to minus").

The connecting cables between the end connections of the battery and the charging rectifier/UPS should be designed as flexible conductors. Rigid conductors can transmit vibrations, which may lead to the connection being loosened. The cables must be supported in such a way that no mechanical forces can be transmitted to the connection terminals (cable trays, cable ducts, cable clamps).

6.7 Commissioning charge (initial charge)

As a rule, the batteries are no longer fully charged at the time of installation. This applies in particular to batteries that have previously been stored for a long time (see chap. 5). To bring the cells to an optimal state of charge as quickly as possible, you must first carry out an initial charge. The first charge (time-limited) is a so-called "boost charge".

Attention!

Baureihe power.com H.C

This battery should be cycled 2 to 3 times before it reaches its nominal capacity. Hoppecke recommends C_5 - C_{10} discharge and a charge according to 6.7.1. After that, the battery can be used normally.

1. Find out what is the maximum voltage allowed that the charging rectifier can deliver without damaging the peripherals.
2. Divide this maximum value by the number of battery cells connected in series (i.e. not batteries). The value determined in this way is the maximum possible cell voltage for the initial charge.
3. Adjust the voltage so that average cell voltages of max. 2.4 V per cell result. The initial charge can take up to 48 hours.
4. It is important that the first charge is complete. Interruptions are to be avoided as far as possible. The commissioning must be recorded in the commissioning report (see test report).

5. During commissioning, the cell voltage on the pilot cells and, after completion of commissioning, the cell voltage and surface temperature on all cells must be measured and recorded in the commissioning report with time.

Danger!

The surface temperature of the battery cells/units must not exceed 55 °C, if necessary, charging must be interrupted until the temperature has dropped below 45 °C.

6.7.1 Commissioning charge with constant voltage (IU characteristic curve)

- A charging voltage of max. 2.4 V/cell is required
- The maximum charging current should not be more than 20 A per 100 Ah C10
- If the maximum temperature of 55 °C is exceeded, charging must be interrupted
- Temporarily switch to float charge so that the temperature drops
- The entire commissioning time (IU-together) should take 24 hours

6.7.2 Extended commissioning charge

Long storage or climatic influences (humidity, temperature fluctuations) reduce the state of charge of the cells. This will require extended commissioning charge. Extended commissioning is only carried out if the storage period (see chap. 5) is not exceeded.

Conduct the extended commissioning charge according to the following procedure:

1. Charging with 10 to 15 A per 100 Ah C_{10}, until 2.4 V/cell is reached (approx. 3 to 5 hours).
2. Charge at 2.4 V/cell until charging current reaches 1 A/100 Ah.
3. Charging with 1 A/100 Ah for 4 hours (cell voltage will exceed 2.4 V).

7 Battery operation

7.1 Modes

Batteries can operate in different modes, each with specific characteristics and requirements. Each mode of operation has its own characteristics and operating conditions, which are explained in more detail below.

7.1.1 Standby parallel operation

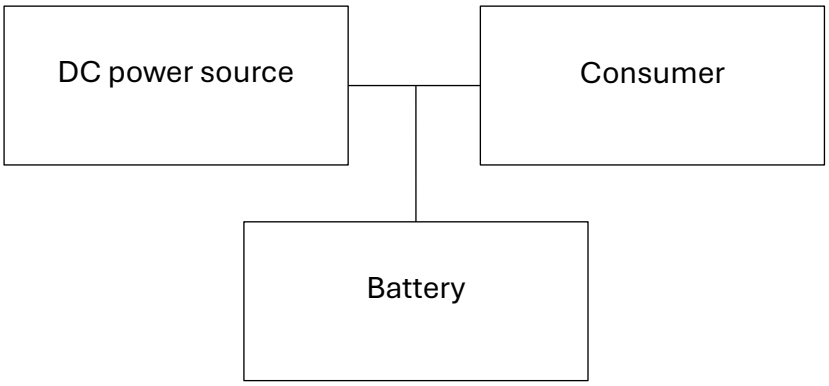

Figure 7.1.1-1 - Standby parallel operation

Characteristic of this mode of operation are:

- Consumer, DC power source and battery are constantly connected in parallel
- The charging voltage is the operating voltage of the battery and at the same time the system voltage
- The DC power source (charging rectifier) can deliver the maximum consumer current and battery charging current at any time
- The battery will only provide power if the DC power source fails
- The charging voltage to be set is the float charge voltage per cell x the number of cells connected in series (measured at the end poles of the battery)
- To shorten the recharging time, a charging stage can be used at which the charging voltage is max. 2.4 V x number of cells (standby parallel operation with recharging stage)

7.1.2 Floating operation

Characteristic of this mode of operation are:

- Consumer, DC power source and battery are constantly connected in parallel
- The charging voltage is the operating voltage of the battery and at the same time the system voltage
- The DC power source is not capable of always delivering the maximum consumer current. The consumer current temporarily exceeds the rated current of the DC power source. During this time, the battery provides power
- It is therefore not always fully charged
- Therefore, the charging voltage should be set to approx. (2.25 to 2.30 V) for vented lead batteries and approx. (2.27 to 2.32 V) for valve regulated lead batteries x the number of cells connected in series in consultation with the battery manufacturer, depending on the number of discharges

7.1.3 Switch mode operation (charge/discharge operation)

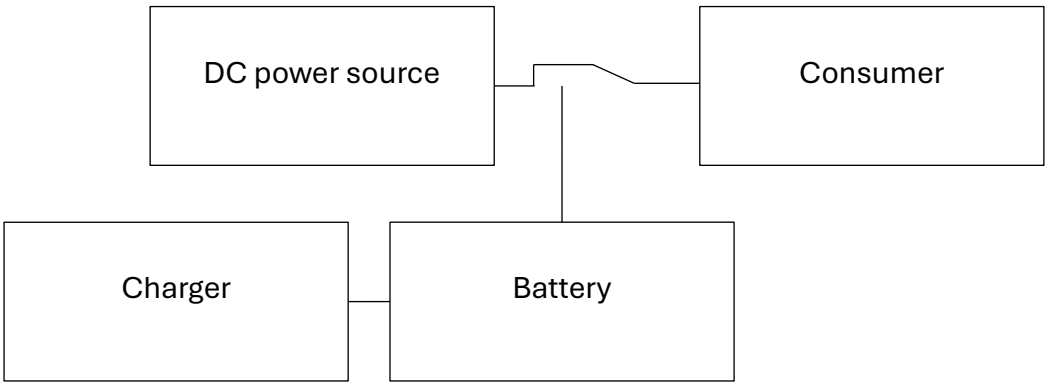

Figure 7.1.3-1 - Switchover operation

Characteristic of this mode of operation are:

- When charging, the battery is disconnected from the consumer
- **Vented lead-acid battery:**
  The charging voltage is 2.6 to 2.75 V/cell towards the end of the charge (depending on depth of discharge and number of cyclic loads)

  Valve regulated lead-acid battery:
  The charging voltage for sealed batteries is max. 2.4 V/cell
- The charging process must be monitored
- **Vented lead-acid battery:**
  After reaching the full charge state, the charge must be terminated or transferred to float charge in accordance with chap.7.2.3 .

  Valve regulated lead-acid battery:
  If the charging current at 2.4 V/cell has fallen to 1.5 A per 100 Ah nominal capacity switch to trickle charging in accordance with chap. 7.2.3
- The battery can be switched to the consumer as needed

7.2 General information on the operation

IEC 62485-1 and IEC 62485-2 apply to the operation of stationary battery systems. Every battery is subject to a natural electrochemical ageing process, which leads to a reduction in the internal discharge cross-sections of the battery in particular (corrosion). How quickly the ageing process progresses, and therefore the service life of the battery, depends largely on the operating temperature.

Attention!

The recommended operating temperature range for lead-acid batteries is 10°C to 30°C. The technical data apply to the nominal temperature of 20 °C. The ideal operating temperature range is 20 °C ± 5 K. Higher temperatures shorten the service life. Lower temperatures reduce the available capacity. Exceeding the limit temperature of 55 °C is not permitted. Continuous operating temperatures greater than 45 °C are to be avoided. (Exception: grid | Xtreme VR)

The natural aging process and thus the service life expectation play an important role, especially in the context of high-current applications. A high-current application is defined as currents and discharge rates of ≤ $C_{0.5}$. When discharging with high currents, disproportionately more heat is generated, which can lead to thermal overloading of the reduced discharge cross-sections. After a certain ageing progress, the reduced cross-sections are no longer able to conduct the current designed for the load case over the defined period. In extreme cases, this can lead to an unexpected failure of the battery.

Permissible operating temperature ranges:
Vented / VRLA batteries: -20°C to +40°C
grid | Xtreme VR batteries: - 40 °C to + 55 °C (with short peaks up to 60°)

When using the HOPPECKE grid | AquaGen recombination system in the context of vented batteries, the operating temperature of the recombination system must always be ≥ 5°C. This prevents icing on the internal ceramic components and ensures optimum recombination.

Attention!

Additional intervention in the charging regime, such as through a BMS, must be discussed with HOPPECKE.

7.2.1 Discharging

Attention!

The final discharge voltage of the battery assigned to the discharge current must not be undercut.
Unless specific information is provided by the manufacturer, no more than the nominal capacity may be withdrawn. After discharges (even partial discharges), fully charge the battery immediately.

A characteristic feature of the grid | Xtreme VR batteries is the higher voltage level due to their design compared to conventional lead-acid batteries. This higher voltage level can be seen both in the open-circuit voltage and during discharge. It is therefore particularly important to take these into account when selecting the final discharge voltage in order to avoid over-discharge compared to classic lead-acid batteries. The minimum recommended final discharge voltages for safe and long-lasting operation are depicted in Table 7.2.1-1.

Table 7.2.1-1 - Minimum final discharge voltages as a function of the discharge time

Discharge	Min. recommended final discharge voltage
< C_{30}min	1.60 V/Z
C_{30}min	1.65 V/Z
C_1	1.70 V/Z

C_3	1.75 V/Z
C_5	1.75 V/Z
C_{10}	1.80 V/Z

7.2.2 Charging – General

Depending on the use case, charging takes place at the points listed in chap. 7.1.1 to chap. 7.1.3 operating modes. The charging method is applicable with the limit values according to DIN 41773 (IU characteristic curve).

Attention!

Superimposed AC currents
Depending on the charger type and charging characteristic curve, alternating currents flow through the battery during charging and are superimposed onto the charging direct current. These superimposed alternating currents and the reaction of the loads lead to additional heating of the battery or batteries and create a cyclical strain on the electrodes. This might result in premature aging of the battery.

In order to achieve the optimum service life for sealed lead-acid batteries on float charge, a maximum effective value of the alternating current of 1 A per 100 Ah nominal capacity is recommended.
During the Boost charging the alternating current should not be higher than 5 A/100 Ah.

Attention!

Temperature-dependent adjustment of the charging voltage
Temperature compensation of the voltage is necessary if the battery operating temperature deviates from 20 °C. HOPPECKE recommends -2,5 mV/K. If the inverter cannot realize the compensation (technically), the border area would be 15 °C to 25 °C (see Figure 7.2.2-1). Nevertheless, the compensation should be realized.
The temperature compensation of -2.5 mV/(cell*K) is limited to +40°C / +104°F, as the compensated charging voltage increasingly approaches the natural open-circuit voltage of the battery above this temperature and therefore no sufficient overvoltage is available to keep the battery in a fully charged state.
In the extended temperature range of 40 to 55°C, the batteries of the grid | Xtreme VR series must therefore be operated with a constant float charge voltage of 2.25 V/cell.

Table 7.2.2-1 - Corrected charging voltage as a function of the charging temperature for grid | Xtreme VR with a float charge voltage of 2.30 V/cell at $T_{nominal}$

Temperatur [°C]	-10	0	10	20	30	40	50	55
Charging voltage [V/cell]	2,375	2,35	2,325	2,30	2,275	2,25	2,25	2,25

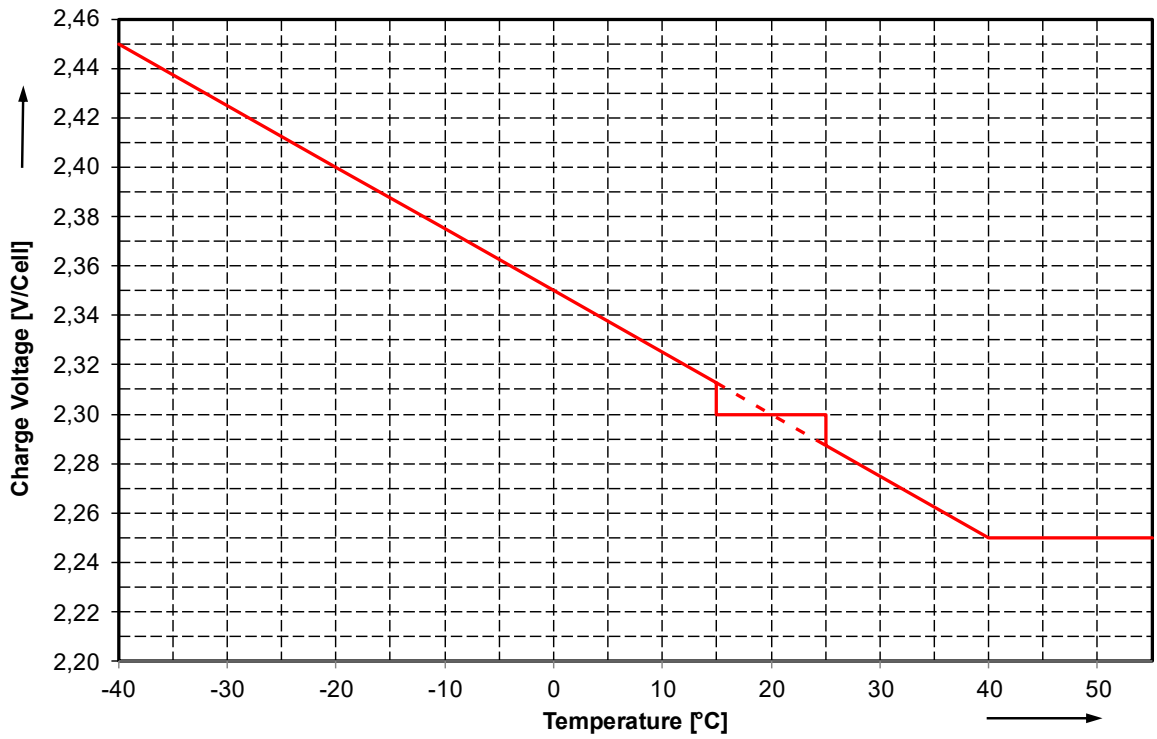

Figure 7.2.2-1 - Temperature-dependent adjustment of the float charge voltage for grid | Xtreme VR with a float charge voltage of 2.30 V/cell at $T_{nominal}$

Maximum charging currents

grid | Xtreme VR batteries have a very high charging acceptance and are therefore ideally suited for applications that need to be ready for use again in a short time. Up to a voltage of 2.4 V/Z, no current limitation is necessary, so that the battery can basically absorb the maximum output current of the charger. Contrary to the above information, we recommend limiting the maximum charging current to 60A per 100Ah for the **grid | Xtreme VR (Green Series)**.

For applications where the recharging time is less critical, a charging current of between 5 A and 40 A per 100 Ah battery capacity (C_{10}) is recommended when using chargers with IU characteristics according to DIN 41773.

7.2.3 Float charging

Float charging serves to maintain the full charge state of the battery(s) and largely corresponds to the type of charging described in chap. 7.

Use a charger with the specifications according to DIN 41773 (IU characteristic curve). Adjust the charging voltage so that the average cell voltage corresponds to a value of 2.30 V/Z +/-1%.

Example: Nominal voltage of the battery: 60 V, i.e. the charging voltage of the charger for float charge mode is 30 x float charge voltage per cell. E.g. 30 x battery cells grid | Xtreme VR results in a charging voltage of 30 x 2.30 V/cell = 69 V ± 1 % (= max. 68.31 V / min. 69.69 V).

7.2.4 Equalizing charge (correction charge)

Under normal circumstances, equalizing charges are not necessary. If there are unacceptably large discrepancies between the cell voltages of the individual cells at float charge (see Table 7.2.4-1), an equalizing charge must be performed.

Attention!

For new systems, these maximum permissible deviations may be higher for a limited period of time, which is not a defect but a normal behavior of pure lead batteries due to the technology. Initially observed voltage spreads decrease with continuous standby parallel operation and should settle at a normal level after approx. 6 months (see Table 7.2.4-1).

Equalizing charges are also required after deep discharges, after insufficient charging processes and if the cells have been unevenly warm for a long time (≥ 5K).

Table 7.2.4-1 - Permissible differences in cell voltage under float charge

Voltage per unit	Max. permissible deviation of the float charge voltage from the mean value for single cells/blocks
2 V	- 0,31 V / + 0,20 V
4 V	- 0,43 V / + 0,28 V
6 V	- 0,53 V / + 0,35 V
12 V	- 0,75 V / + 0,50 V

Example of grid | Xtreme VR 12V Block Batteries:

Float charge voltage max. = 14.3 V/block and min. 13.05 V/block (at average float charge voltage of 2.30 V/cell * 6 cells = 13.8 V).

Attention!

As the max. permitted load voltage might be exceeded it must be clarified in advance whether the loads can be disconnected for the duration of the equalizing charge.

Perform the equalizing charge as follows:

1. Charging with IU characteristic curve, up to max. voltage U = 2.4 V/cell up to 48 hours. Thereby the charging current must not be higher than 20 A per 100 Ah nominal capacity.
2. If the maximum temperature exceeds 45 °C, terminate the charging process or switch to float charge to allow the temperature to drop.
3. The end of the equalization charge is reached when the cell voltages no longer increase within 2 hours.

Attention!

Please note that the float charge voltages of grid | Xtreme VR batteries may fluctuate significantly in the first 6 months after commissioning. Initially observed voltage fluctuations typically decrease with continuous standby parallel operation and then stabilize at the usual level.

Background:
Since pure lead batteries do not have alloy components in the electrodes, discrete voltage levels with steep rising edges are formed. This leads to a greater voltage spread, particularly in new batteries that are being operated in a compound for the first time, and represents normal behavior due to the technology.

8 Battery maintenance

Regular care and maintenance of your battery system is essential for the required reliability and longevity. You should document the type and extent of the maintenance work as well as all measurement results as well as possible. The records can be very helpful for troubleshooting and are a prerequisite for any warranty claims.

Take the following measurements regularly and record the measured values:

Interval	Activity	Reference
6 months	Measuring the charging voltage of the entire battery system	Chap. 7.2.4
	Measuring the individual voltage of some cells or block batteries	Chap. 7.2.4
	Measuring the surface temperature of some cells or block batteries	Max. deviation 5K, Chap. 7.2.4
	Measuring the temperature in the battery compartment	Chap. 6.1
12 months	Measurement of the individual voltage of all cells or block batteries	Chap. 7.2.4
	Measurement of the surface temperature of all cells or block batteries	Max. deviation 5K, Chap. 7.2.4
	Measuring the insulation resistance of the battery system	Chap. 6.1
	Visual inspection of all bolted connections	Chap. 6.1

	Testing of all unsecured screw connections for tight fit	Chap. 6.6.6
	Visual inspection of the battery racks or battery cabinets	Chap. 6.1
	Checking the proper ventilation of the battery compartment	Chap. 6.1.1
3 years	Capacity testing (recommended), shorten the testing interval with age	Chap. 8.2

When evaluating cell or block voltages, also note the special features of lead-acid batteries with electrolytes fixed in gel according to chap.7.2.4.

HOPPECKE recommends using a stationary battery monitoring system to monitor relevant data. Please contact your local HOPPECKE representative for more information.

8.1 Cleaning the battery

Danger!

Regular cleaning of the battery is necessary to ensure availability and compliance with accident prevention regulations. The battery should be cleaned at least once a year. The following should be observed:
When cleaning the battery, face protection (impact-resistant visor according to EN 166 Class F or comparable), safety goggles and protective clothing must be worn. To avoid electrostatic charging when handling batteries, textiles, safety shoes and gloves must have a surface resistance ≤ 10^8 ohms.

Danger!

Do not use dry cleaning clothes when cleaning!
Clean the cell/block containers of the batteries with a slightly damp cotton or paper towel.

8.2 Check the battery system

8.2.1 Preparing the battery system for capacity testing

We recommend carrying out an equalizing charge on the battery system before the test. This equalization charge should be carried out no more than 7 days ago and at least 3 days!

The most efficient and fastest method for preparing batteries for tests is the IU charging method, which is also used for equalizing charges. Appropriate measures must be taken if the permissible load voltages are exceeded, e.g. switching off the loads. The IU characteristic curve with an increased voltage of (2.33 to 2.40 V) x number of cells is the most common charging characteristic curve for recharging or commissioning batteries.

Charging is carried out with a constant voltage of max. 2.33 V to 2.40 V/cell for up to 48 hours. The charging current should not exceed 20 A per 100 Ah C10. If the battery temperature (cell/block temperature) exceeds the maximum value of 45 °C, charging

must be interrupted or temporarily switched to float charging so that the temperature drops.

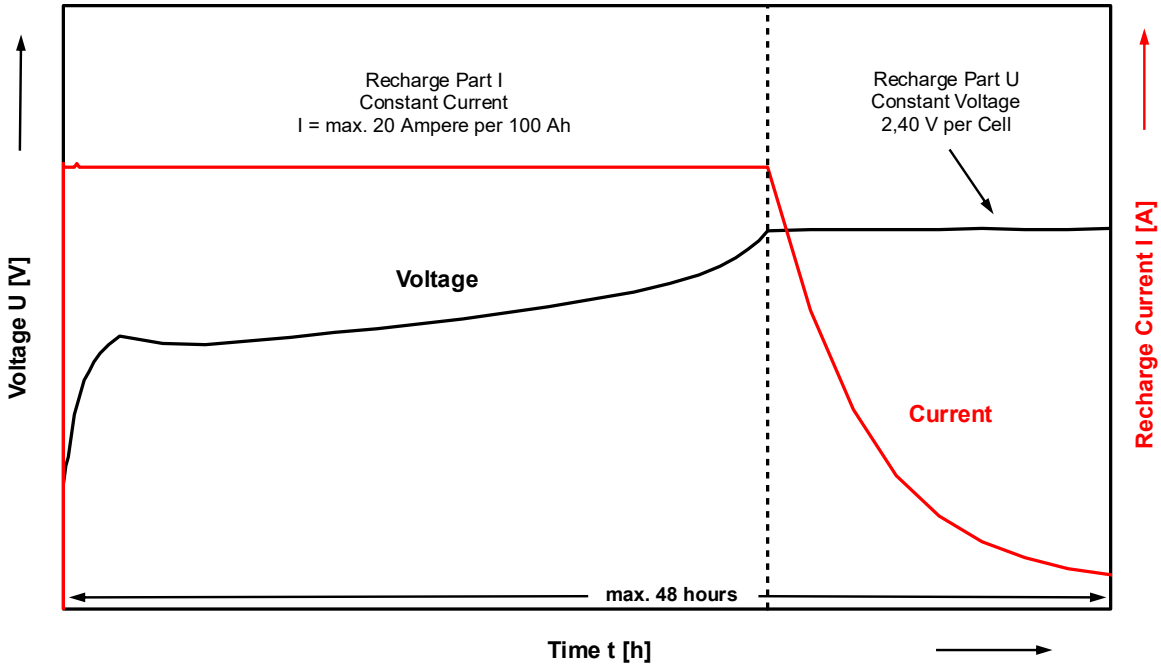

Figure 8-1 - Characteristic curve IU

An even more effective method of preparing the batteries is the IUIa charging method, which involves an additional constant current charging step. In contrast to charging with constant voltage, a constant charging current of 0.8 A/100 Ah is switched on for 3 hours in the last step after the IU charging has been completed. The charging voltage can rise to up to 2.65 V per cell.

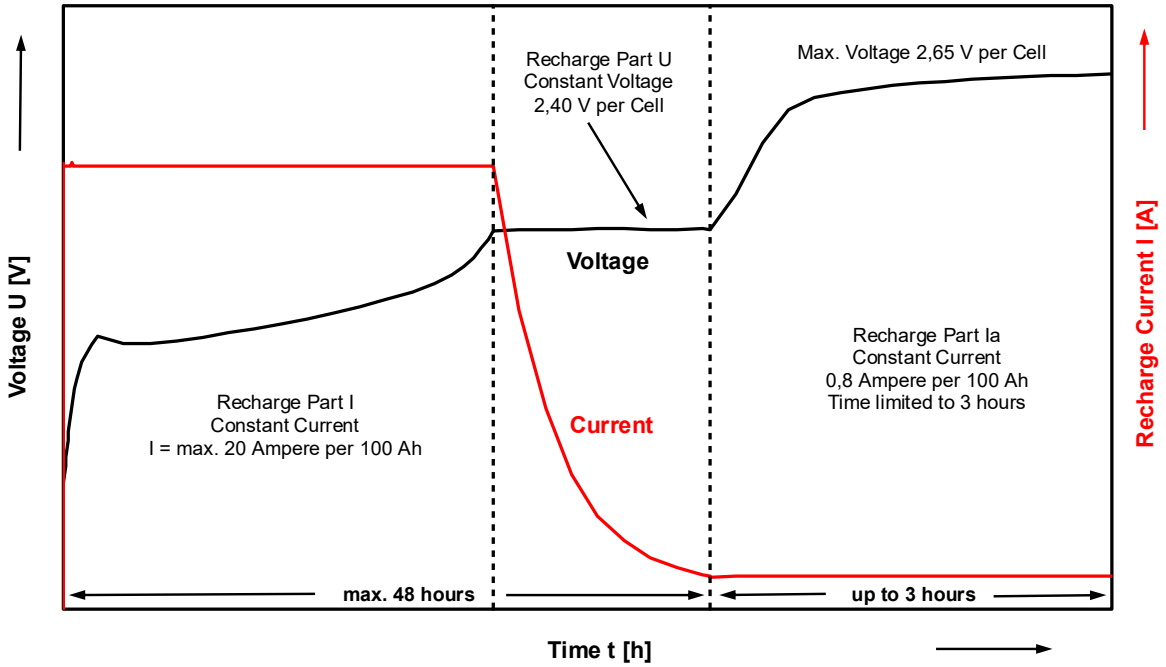

Figure 8-2 - Characteristic curve IUIa

Due to the increased gas development in the IUI_a charging method, increased ventilation of the battery compartment is necessary. A full charge of the battery is generally achieved if the voltage and charging current no longer change within 2 hours.

8.2.2 General information on how to carry out the capacity check

Tests shall be carried out in accordance with EN 60896-21: "Stationary lead-acid batteries", Part 21: "Sealed designs – Test methods" (IEC 60896-21:2004). Special test instructions, e.g. according to DIN VDE 0100-710 and DIN VDE 0100-718, must also be observed.

Necessary accessories:

- Suitable electronic load or electrical resistance (with adjustable resistance value to adjust the discharge current/discharge load)
- Suitable current clamp with sufficient accuracy to measure the DC current or shunt to measure the discharge current
- Voltage meter for measuring electrical voltage
- Thermometer to check the battery temperature
- Clock for measuring discharge time
- Project planning data table for selecting the correct discharge current or discharge power

Requirements for the accuracy class of the above-mentioned measuring equipment can be found in Table 8-1.

Table 8-1 - Requirements for the accuracy of the measuring instruments (accuracy class)

For voltage measurement:	0,5
For current measurement:	0,5
For temperature measurement:	1 °C
For timekeeping:	1 %

Below you will find general information on how to determine the actual capacity of your battery system.

1. Make sure all connections are clean, tight, and not corroded.
2. During normal battery operation, measure and record the following parameters:
   – Individual voltage of all cells or block batteries
   – surface temperature of at least one in ten cells or battery block
   – Voltage of the overall battery system
3. Interrupt the connection of the battery system to be measured to the charger and to all consumers!
4. Prepare an adjustable load that you can connect to the battery system. The load current must be equal to the maximum allowable current for which the battery is designed.
5. Provide a shunt that you can connect in series with the load.
6. Provide a voltmeter so that you can measure the total voltage of the battery.
7. Connect the load, the shunt and the voltmeter and start a time measurement at the same time.
8. Keep the current constant and measure the voltage of the battery system at regular intervals.
9. Check the row connectors (block connectors), step connectors and tier connectors for impermissibly high heating.
10. Calculate the capacity of the battery system using the following equation:
    Capacitance [% at 20 °C] = $(Ta/T_s) \times 100$
    Ta = actual discharge time until the allowable minimum voltage is reached
    Ts = theoretical discharge time until the permissible minimum voltage is reached
11. Reconnect the battery system as originally and perform a heavy charge.

8.2.3 Implementation of the capacity test and evaluation

The discharge of the battery is carried out in accordance with the regulations for carrying capacity tests DIN EN 60896-21. The discharge current and discharge power are selected according to the design data tables up to a certain final discharge voltage and the given loads.

In the capacity test, after 10% of the discharge time has elapsed, the discharge current or discharge power, temperature, battery voltage as well as the cell or block voltage and the discharge time should be recorded.

In any case, however, the values at 10%, 50%, 80% and 95% of the discharge time must be recorded. The discharge is to be terminated when the battery voltage has reached the value n x U_f, where n is the number of cells and U_f is the selected final discharge voltage per cell.

The discharge must also be terminated as soon as a cell has reached a voltage of U = U_f – 200 mV or, in the case of block batteries with n cells each, as soon as the voltage of a block U = U_f – √ n x 200 mV has reached.

Example:

13 Cells grid | power VRL 2-325
5 h Capacity Test
Battery Final Voltage = 23.40 V (for 13 Cells)
Average Voltage Per Cell = 1.80 V
Minimum Single Cell Final Voltage = 1.60 V

Table 8-2 - Measured cell voltages and total voltage after 95% of the required discharge time

Cell number	Case A	Case B	Case C
1	1,84	1,84	1,79
2	1,83	1,86	1,80
3	1,83	1,87	1,81
4	1,84	1,87	1,80
5	1,84	1,86	1,81
6	1,85	1,86	1,79
7	1,69	1,87	1,78
8	1,84	1,86	1,80
9	1,83	1,59	1,81
10	1,85	1,84	1,81
11	1,84	1,85	1,80
12	1,84	1,85	1,79
13	1,85	1,85	1,79
Battery	23,77 V	23,87 V	23,38 V

Case A: A "weak cell", capacity test passed, battery OK.
Case B: One cell faulty, capacity test failed, battery not OK
Case C: All cells OK, capacity test failed, battery not OK

Immediately after the capacity test, the battery must be charged. The measured capacity C (Ah) at the average initial temperature is calculated as the product of the discharge current (in amperes) and the discharge time (in hours). Since the battery capacity depends on the temperature, a temperature correction of the measured battery capacity must be performed.

At temperatures above the nominal temperature of 20 °C, the battery capacity increases, while at lower temperatures it decreases. If the average initial temperature deviates from the reference temperature of 20 °C, the capacity must be adjusted. The temperature correction is carried out in accordance with the DIN EN 60896-21 standard according to equation [1].

$$C_a = \frac{C}{1 + \lambda\,(\vartheta - 20°C)} \qquad [1]$$

C = measured capacity
λ = Correctionfactor (λ= 0.006 for discharges > 3 h and λ = 0.01 for discharges ≤ 3 h)
ϑ = Initial temperature
C_a = corrected capacity

According to the DIN EN 60896-21 standard, a capacity test is considered to have been passed if the battery reaches 95% of the required capacity at the first discharge. The battery must deliver 100% of the required capacity after the fifth discharge at the latest.

A report must be drawn up after discharging (see test report).

Attention!

When handling batteries (e.g. capacity test), the safety requirements according to IEC 62485-2 (insulated tools, eye protection, protective clothing, gloves, ventilation, etc.) must be observed!

8.3 Notes on impedance measurement

Impedance measurement can also be used to check batteries. Please note that there is no standardized measurement rule for this method and there are a few things to consider when using it.

To use the results of an impedance measurement sensibly and correctly, follow the instructions in the ZVEI Leaflet No. 34.

9 Troubleshooting

If faults are detected on the battery or the charging system, customer service must be called immediately. Measurement data in accordance with chap. 8 simplifies troubleshooting and fault rectification. A service contract with us makes it easier to detect faults in good time.

9.1 Scattering of the individual cell voltages

If you notice that the individual cell voltages differ (see chap. 7), proceed as follows:

Possible cause	Remedy
Different cell temperatures	Check the charger
Different electrolyte densities of the cells (VLA batteries)	Carry out an equalizing charge, see chap. 7
Plate shorts in one or more cells	Measuring cell voltages, replacing defective cells
Different charge levels of the cells/block batteries	Carry out an equalizing charge, see chap. 7
Insulation resistance too low	see chap. 9.3
Lead-acid battery with fixed electrolyte (gel)	Normal behaviour within the first years of operation, see chap. 7

9.2 Available capacity too low

Insufficient capacity can be due to the following causes:

Possible cause	Remedy
Electrolyte Stratification (VLA)	Carry out an equalizing charge, see chap. 7
Electrolyte levels below the minimum (VLA batteries)	Refill distilled water, see chap. 8
Loose or oxidized terminal terminals	Check all connections, replace connectors if necessary.
Insulation resistance too low	see chap. 9.3

9.3 Insulation resistance too low

According to DIN EN IEC 62485-2, the minimum insulation resistance between the battery circuit and other local conductive parts must be greater than 100 Ω per volt (the nominal voltage of the battery). In the event of an insulation fault, leakage currents can reduce the available capacity of the battery. This entails the risk of different cell voltages occurring. Regular cleaning can prevent these leakage currents and different cell voltages.

Possible cause	Remedy
Battery contamination	Cleaning the battery, see chap. 8.1
Leaks in a cell/block	Fix the cause of the leak; if necessary, replace the cell, see chap. 9.5

9.4 Battery voltage not measurable

If no battery voltage is measurable, do the following:

Possible cause	Remedy
A fuse has tripped	Search for the fault, switch or replace the fuse
Cable break	Replace cables
Defective connectors	Replace connectors

9.5 Replacement of a cell/battery in the string

It is essential to make sure that the exchange is de-energized. Before disconnecting the connectors, the circuit must be switched off.

Attention!

After loosening the connectors, cells/block batteries must be moved, please refer to the instructions in the chap. 6.6. Lifting the cells/block batteries at the terminals is prohibited, as this will destroy the cells/block batteries.

Removal of the defective cell / block battery:

1. disconnect the supply lines (circuit breakers, fuses, switches) before starting disassembly. Only to be carried out by authorized personnel! Check that the battery is disconnected from all charging equipment and consumers.
2. Loosen the terminal screws and connectors of the affected battery and remove them directly from the battery.
3. Lighter cells/block batteries can be lifted directly out of the rack manually if space permits.
4. In the case of heavy cells/block batteries, it is necessary to dismantle other elements of the affected rack row to facilitate access. The position of the defective cell/block battery and local conditions will determine which additional elements need to be removed.
5. Use soft soap to make it easier to move the batteries sideways over the support rails of the rack. When moving the batteries sideways in the rack, do not press in the middle, but around the (stiffer) corners. Only press by hand, never use tools!
6. Slide the batteries onto the mobile assembly platform positioned to the side of the rack and store temporarily for reassembly.
7. Remove the defective cell/block battery from the rack in the same way.

The integration of the cell into the cell network may only take place after successful commissioning.

Installation of filled and charged batteries

If a cell or a block in a battery string needs to be replaced and the replacement cell/block is **filled and charged**, the procedure is described in chap. 6.6.

10 Disassembly

When dismantling a battery system, all safety instructions listed in this document must be considered, see chap. 2. This includes, in particular, personal protective equipment, safety clothing and the use of insulated tools.

Follow these steps:

- Disconnect the supply lines (circuit breakers, fuses, switches) before starting disassembly. Only to be carried out by authorized personnel! Check that the battery is disconnected from all charging equipment and consumers.
- For battery systems with a nominal voltage > 60 V, first remove the group and level connectors in order to divide the battery system into smaller partial voltages.
- Then remove the connectors between the cells/blocks.
- Loosened connectors and terminal screws must be removed from the battery immediately.
- Ensure that the battery cells/blocks are aligned vertically at all times during removal, packaging and transportation. Avoid tilting the battery cells/blocks in any way.
- The cells/blocks must be packed for transportation in accordance with ADR 598B. Externally damaged cells must be packed and transported separately (e.g. in a palox). See also chap. 5.

HOPPECKE
POWER FROM INNOVATION

HOPPECKE Batterien GmbH & Co. KG
Bontkirchener Str. 1
59929 Brilon
Deutschland
Tel.: +49 (0) 2963 61-374
Fax: +49 (0) 2963 61-270
E-Mail: reservepower@hoppecke.com

All details in this brochure are based on state-of-the-art technology. Our products are subject to constant development. We therefore reserve the right to make changes.

V1.3

www.hoppecke.com