Instructions

29:1 Lube Pro™ Vertical Grease Pump

3A4096N

EN

For pumping non-corrosive and non-abrasive grease only. For professional use only.

Models:

See page 3 for model information, including maximum working pressure and approvals.

3500psi (24 MPa, 241 bar) Maximum Working Pressure
175 psi (1.2 MPa, 12.07 bar) Maximum Air Input Pressure

Important Safety Instructions

Read all warnings and instructions in this manual before using the equipment. Save these instructions.

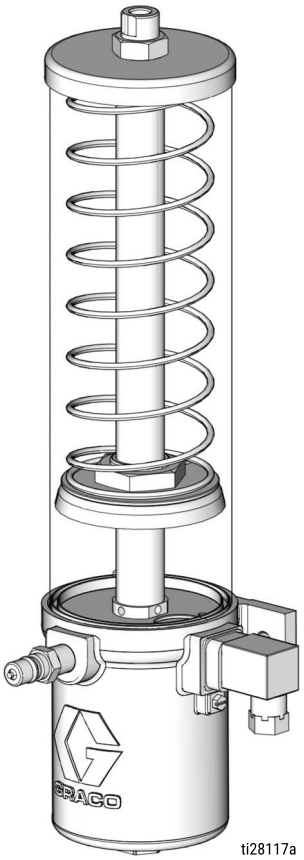

PROVEN QUALITY. LEADING TECHNOLOGY.

Contents

Models 3
Warnings 4
Typical Installation 6
Installation 7
Grounding 7
Mount the Pump 7
Low Level Models Only 7
DIN Connector 7
Air and Fluid Line Accessories 8
Air Supply Lines. 8
Fill Reservoir 8
Prime 9
Supply Lines 9
Feeder Lines 9
Injectors 9
Air Lock Procedure 10
Operation 11
Pressure Relief Procedure 11
Pump 11
Start Up 11
Low Level Switch 12
Shut Down 12
Lubrication System Sizing and Calculation Guidelines 13
Table 1: Lubricant Output and Pressure - US 13
Table 2: Lubricant Output and Pressure - Metric 13
Repair 14
Seal Replacement 14
Disassembly 14
Reassembly 19
Recycling and Disposal 24
End of Product Life 24
Troubleshooting 25
Parts 26
Dimensions 28
Dimensions: US - inches 29
Dimensions: Metric - mm 29
Technical Specifications 30
California Proposition 65 31
Graco Standard Warranty 32

Models

Part No.	Size	Low Level	Normally Open	Normally Closed	EU
24Z052	1 lb	X	X		
24Z053	1 lb	X		X	
24Z057	4 lb				
24Z058	4 lb	X	X		
24Z059	4 lb	X		X	
25V016	3 lb	X	X		

Warnings

The following warnings are for the setup, use, grounding, maintenance, and repair of this equipment. The exclamation point symbol alerts you to a general warning and the hazard symbols refer to procedure-specific risks. When these symbols appear in the body of this manual or on warning labels, refer back to these Warnings. Product-specific hazard symbols and warnings not covered in this section may appear throughout the body of this manual where applicable.

⚠ WARNING

SKIN INJECTION HAZARD

High-pressure fluid from dispensing device, hose leaks, or ruptured components will pierce skin. This may look like just a cut, but it is a serious injury that can result in amputation. **Get immediate surgical treatment.**

- Do not point dispensing device at anyone or at any part of the body.
- Do not put your hand over the fluid outlet.
- Do not stop or deflect leaks with your hand, body, glove, or rag.
- Follow the **Pressure Relief Procedure** when you stop dispensing and before cleaning, checking, or servicing equipment.
- Tighten all fluid connections before operating the equipment.
- Check hoses and couplings daily. Replace worn or damaged parts immediately.

PRESSURIZED EQUIPMENT HAZARD

Over-pressurization can result in equipment rupture and serious injury.

- Do not exceed the maximum air input pressure.
- Fill slowly to avoid over pressurizing reservoir.
- Use tubing, hoses and other components with pressure ratings equal to or higher than the pump rating.

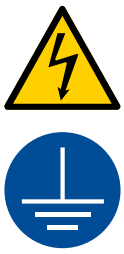

ELECTRIC SHOCK HAZARD

This equipment must be grounded. Improper grounding, setup, or usage of the system can cause electric shock.

- Turn off and disconnect power at main switch before disconnecting any cables and before servicing or installing equipment.
- Connect only to grounded power source.
- All electrical wiring must be done by a qualified electrician and comply with all local codes and regulations.

⚠ WARNING

PLASTIC PARTS CLEANING SOLVENT HAZARD

Many cleaning solvents can degrade plastic parts and cause them to fail, which could cause serious injury or property damage.

- Use only compatible solvents to clean plastic structural or pressure-containing parts.
- See **Technical Specifications** in all equipment manuals for materials of construction. Consult the solvent manufacturer for information and recommendations about compatibility.

EQUIPMENT MISUSE HAZARD

Misuse can cause death or serious injury.

- Do not operate the unit when fatigued or under the influence of drugs or alcohol.
- Do not exceed the maximum working pressure or temperature rating of the lowest rated system component. See **Dimensions: US - inches (See Dimensions and Layout drawing, page 28)** in all equipment manuals.
- Use fluids and solvents that are compatible with equipment wetted parts. See Technical Data in all equipment manuals. Read fluid and solvent manufacturer's warnings. For complete information about your material, request SDS from distributor or retailer.
- Turn off all equipment and follow the **Pressure Relief Procedure** when equipment is not in use.
- Check equipment daily. Repair or replace worn or damaged parts immediately with genuine manufacturer's replacement parts only.
- Do not alter or modify equipment. Alterations or modifications may void agency approvals and create safety hazards.
- Make sure all equipment is rated and approved for the environment in which you are using it.
- Use equipment only for its intended purpose. Call your distributor for information.
- Route hoses and cables away from traffic areas, sharp edges, moving parts, and hot surfaces.
- Do not kink or over bend hoses or use hoses to pull equipment.
- Keep children and animals away from work area.
- Comply with all applicable safety regulations.

TOXIC FLUID OR FUMES HAZARD

Toxic fluids or fumes can cause serious injury or death if splashed in the eyes or on skin, inhaled, or swallowed.

- Read Safety Data Sheets (SDSs) to know the specific hazards of the fluids you are using.
- Store hazardous fluid in approved containers, and dispose of it according to applicable guidelines.

MOVING PARTS HAZARD

Moving parts can pinch, cut or amputate fingers and other body parts.

- Keep clear of moving parts.
- Do not operate equipment with protective guards or covers removed.
- Pressurized equipment can start without warning. Before checking, moving, or servicing equipment, follow the **Pressure Relief Procedure** and disconnect all power sources.

PERSONAL PROTECTIVE EQUIPMENT

Wear appropriate protective equipment when in the work area to help prevent serious injury, including eye injury, hearing loss, inhalation of toxic fumes, and burns. Protective equipment includes but is not limited to:

- Protective eyewear, and hearing protection.
- Respirators, protective clothing, and gloves as recommended by the fluid and solvent manufacturer.

Typical Installation

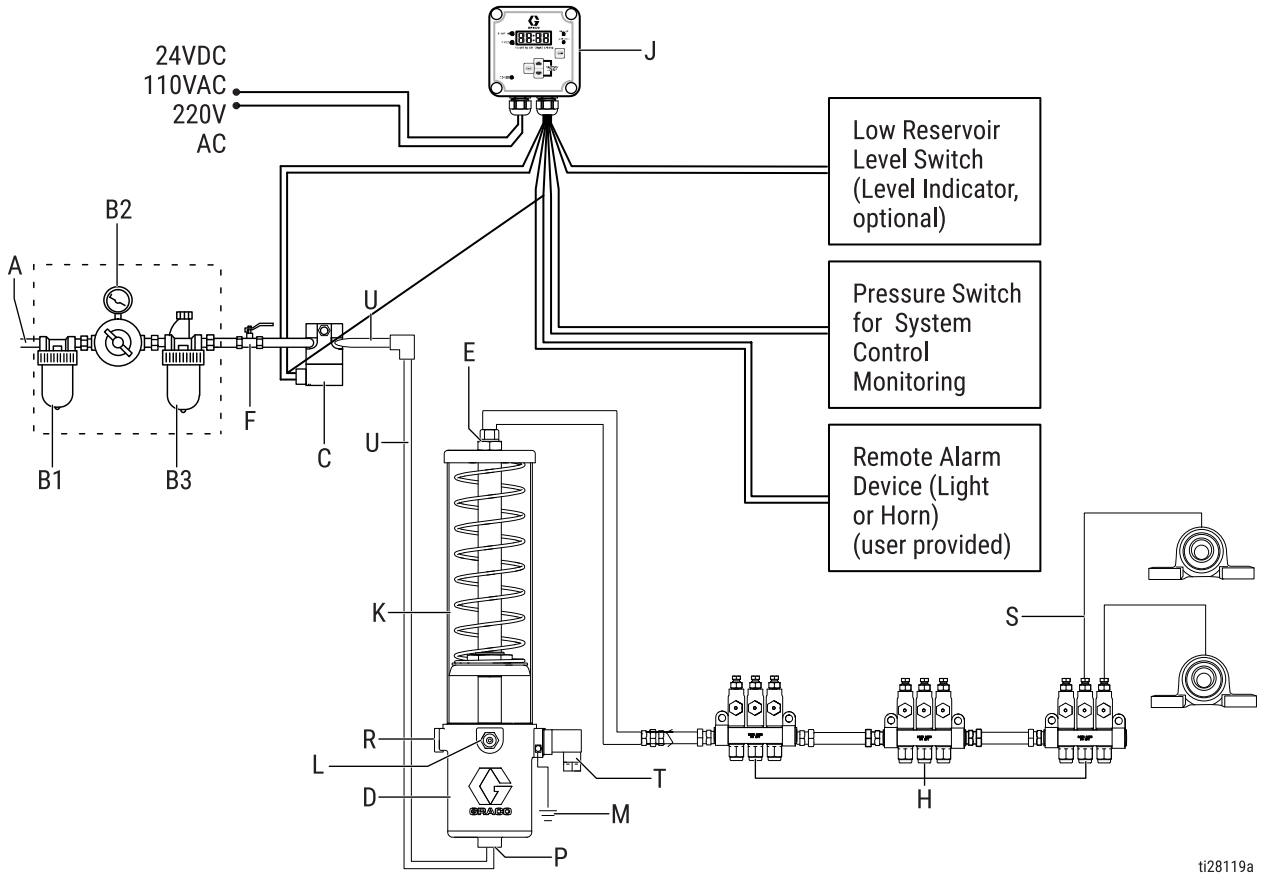

FIG. 1: Typical Installation

Key:

A Main air supply line
B Filter/regulator/lubricator assembly
  B1 - Air filter
  B2 - Air regulator
  B3 - Air lubricator
C Air solenoid valve (3-way)
D Pump module
E Pump outlet
F Bleed-type master air valve (required)
G High pressure lubricant supply lines (user supplied)
H Injector
J Lubricator controller
K Pump reservoir
L Pump reservoir fill port
M Ground
P Pump air inlet - forward stroke
R Air outlet
S Feeder lines
T Low level
U Air supply lines

Installation

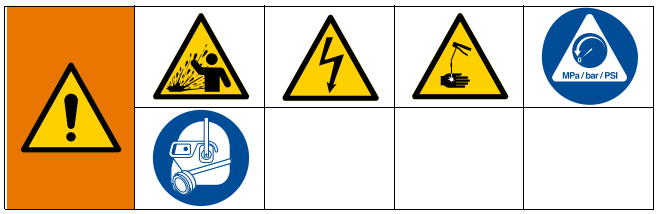

Grounding

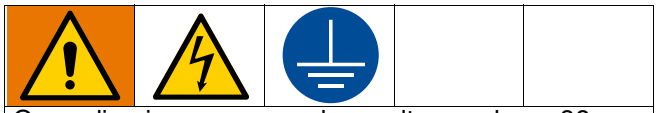

Grounding is necessary when voltages above 30 VAC or 42 VDC are used for the low level switch or an air valve is attached to the pump. Improper grounding can cause electric shock. Grounding reduces the risk of electric shock by providing an escape wire for the electric current in the event of malfunction or breakdown.

To ground the pump (FIG. 2):

1. Remove the ground screw (Z) located on the back of the pump base.
2. Insert the ground screw (Z) through the eye of the ring terminal (W) located at the end of the ground wire (Y).
3. Fasten the ground screw (Z) back onto the back of the pump and tighten the screw securely.
4. Connect the other end of the ground wire (Y) to a true earth ground.

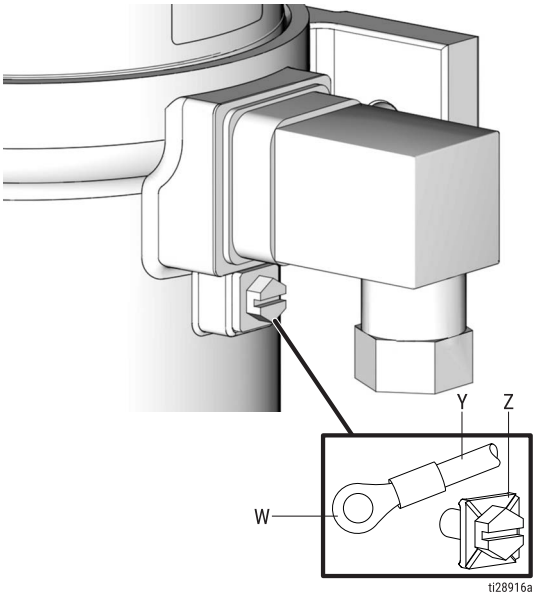

FIG. 2

Mount the Pump

Mount the pump securely so it cannot move around during operation. Failure to do so could result in injury or equipment damage.

Install the pump in a location that adequately supports the weight of the pump when filled with lubricant, and also provides easy operator access to the pump air controls. The pump must be mounted in a vertical position with the reservoir up. See **Technical Specifications**, page 30 for pump weight information, and **Dimensions**, page 28.

Low Level Models Only

DIN Connector

- Normal State: fluid in the reservoir
- Energized State: empty reservoir

Normally Open: Connection is made to PINS 1 and 3 of the DIN Field Wire-able Connector (FIG. 3).

Normally Closed: Connection is made to PINS 1 and 2 of the DIN Field Wire-able Connector (FIG. 3).

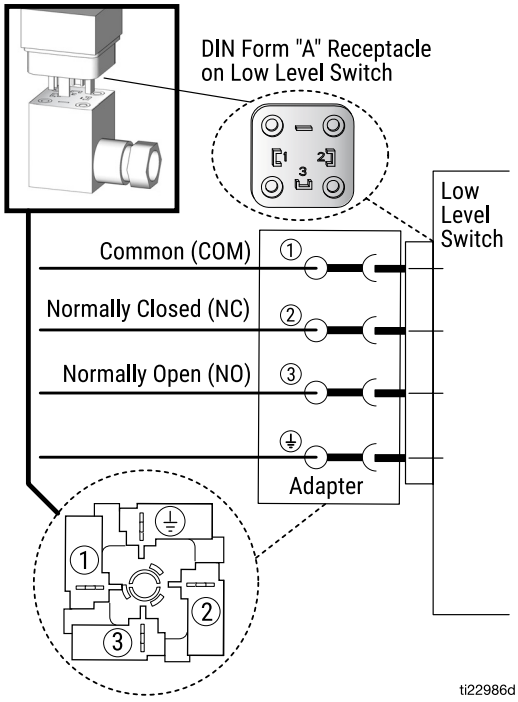

FIG. 3

Air and Fluid Line Accessories

Refer to FIG. 1, page 6, for the following instruction

Install the air line accessories in the order shown in FIG. 1, page 6.

Trapped air can cause the pump to cycle unexpectedly which could result in serious injury from moving parts or splashing.

Bleed-type master air valve (F): Required in the system to relieve air trapped between it and the pump.

Air line filter (B1): Removes harmful dirt and moisture from compressed air supply.

Pump air regulator (B2): To control pump speed and outlet pressure. Locate it close to the pump.

NOTICE

Do not mount the air accessories directly on the solenoid valve air inlet. The air inlet and fittings are not strong enough to support the accessories and may break. Provide a bracket on which to mount the accessories.

1. Install a bleed-type master air valve (F) to relieve air trapped between it and the pump. Install the valve in a location that is easily accessible from the pump and located downstream of the air regulator.
2. Install an air line filter (B1) to remove harmful dirt and contaminants from the compressed air supply.
3. Install the air regulator (B2) to control pressure.
4. Install an air line lubricator (B3) to lubricate the air cylinder.
5. Install the (3-way) air solenoid valve (C) for control of the pump forward and return strokes.

The maximum working pressure of each component in the system may not be the same. To reduce the risk of over-pressurizing any part of the system, know the maximum working pressure rating of each component and its connected components. Never exceed the maximum working pressure of the lowest rated components connected to a particular pump.

To use the air regulator reading to determine the fluid output pressure, multiply the ratio of the pump (29:1) by the air pressure shown on the regulator gauge or see **Table 1: Lubricant Output and Pressure - US**-PSI or **Table 2: Lubricant Output and Pressure - Metric** - MPa (bar), provided on page 13.

Limit the air to the pump so that no air line or fluid line component or accessory is over pressurized.

Air Supply Lines (U)

1. Install two air supply lines (U) between the air solenoid outlets (C) and the pump (D) as shown in FIG. 1, page 6.
2. Install an air supply line (U) between the air solenoid valve inlet (C) and the Filter/Regulator/Lubricator Assembly (B) as shown in FIG. 1, page 6.

Fill Reservoir

1. Remove the grease cap (43) (FIG. 4) from the fill port to access the fill stud (42).
2. Connect the quick connect fitting on the fill pump to the fill port (42).

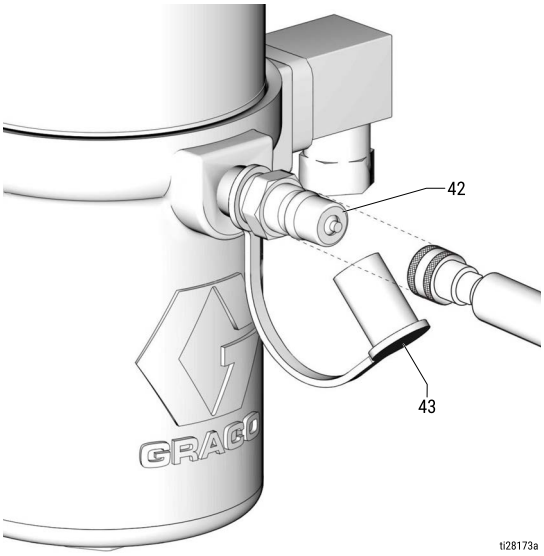

FIG. 4

Over-pressurization can result in equipment rupture and serious injury. Fill slowly to avoid over pressurizing the reservoir.

3. Slowly dispense grease from the fill pump into the reservoir until the grease in the reservoir lifts the follower plate (22) above the reservoir weep hole *(WH)*, grease comes out of the weep hole *(WH)* and expels the air inside the reservoir (FIG. 5).

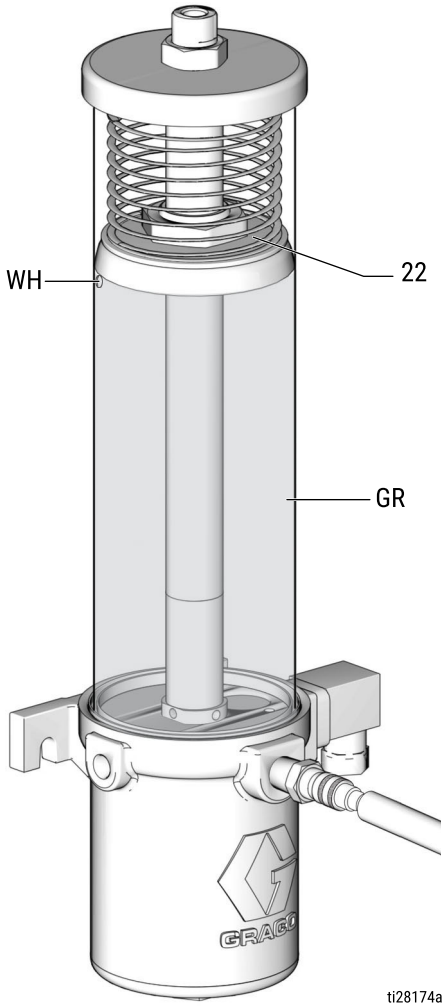

FIG. 5

4. Disconnect the fill pump from the fill stud (42) (FIG. 4, page 8).

5. Secure grease cap (43) over the fill stud (42) (FIG. 4, page 8).

Prime

Refer to FIG. 1, page 6, for the following instruction

NOTE:

- Prime the pump before connecting the outlet to supply line (G).
- Before priming the pump, the reservoir must be filled with lubricant (see Fill Reservoir instructions, page 8).

Run the pump until grease *(GR)*, free of air, comes out of the pump outlet (E). See **Operation**, page 11.

- It may take up to 20 pump strokes to prime the pump. This depends upon the viscosity of the lubricant and temperature.
- Allow 5 seconds ON time for the forward stroke and 5 seconds OFF time for the return stroke.

Supply Lines (G)

Refer to FIG. 1, page 6, for the following instruction

1. Run the pump until grease *(GR),* free of air, comes out of the pump outlet (E). Connect the supply line (G) to the pump outlet (E).

2. If there are multiple pumps on the air line, close the air regulators and bleed-type master air valves to all but one the pumps. If there is only one pump, open its air regulator and bleed-type master air valve.

3. Open the master air valve from the compressor.

4. Set the air pressure to each pump at the lowest pressure needed to get the desired results. See Recommended Pressure provided in **Table 1: Lubricant Output and Pressure - US** or **Table 2: Lubricant Output and Pressure - Metric** provided on page 13.

Feeder Lines (S)

Fill each feeder line (S) with lubricant prior to connecting lines to the injector outlet.

Injectors

1. Check each injector for proper operation. The injector stem should move when lubricant is discharged.

2. Adjust the injector output, if needed, to ensure that the output volume discharged is sufficient.

Air Lock Procedure

Refer to FIG. 1, page 6, for the following instruction

An air lock occurs when a bubble, or pocket of air, prevents the normal flow of the lubricant.

NOTICE

Running the pump dry will cause an air lock. To prevent an air lock, do not run the pump without lubricant. Always refill the pump before it is empty.

If an air lock occurs:

1. Refill the reservoir to the full level (**Fill Reservoir**, page 8).
2. Relieve pressure following the **Pressure Relief Procedure**, page 11.
3. Disconnect the lubricant supply line (G) from the pump outlet (E) (FIG. 6).
4. Open the bleed-type master air valve (F, page 6).
5. Run the pump a few strokes until grease, free of air, comes out of the pump outlet (E) (FIG. 6).

- It may take up to 20 pump strokes to expel the air from the pump and deliver a continuous flow of grease. This depends upon the viscosity of the lubricant and temperature.
- Allow a minimum of 5 seconds ON time for the forward stroke and 5 seconds OFF time for the return stroke.

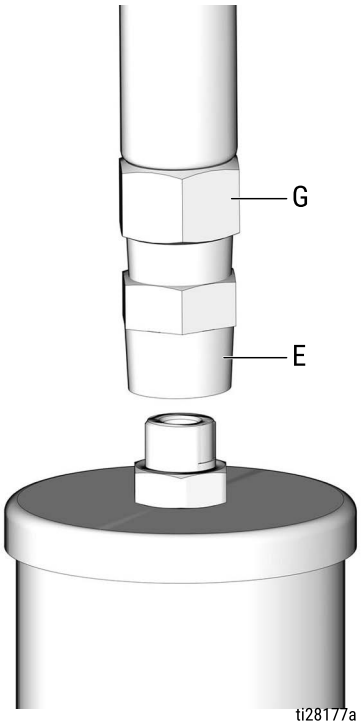

FIG. 6

6. Connect the pump outlet (E) to the lubrication line (G) (FIG. 7).

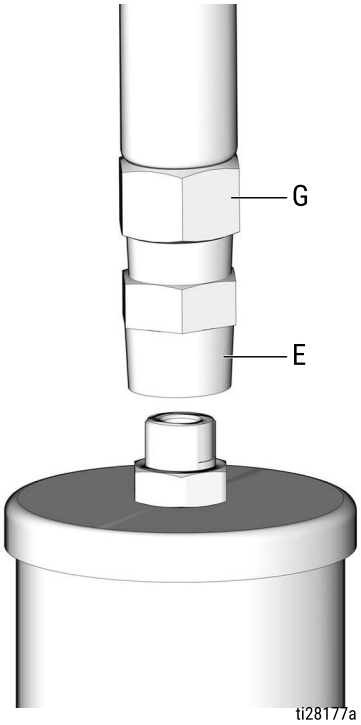

FIG. 7

Operation

Pressure Relief Procedure

Follow the Pressure Relief Procedure whenever you see this symbol.

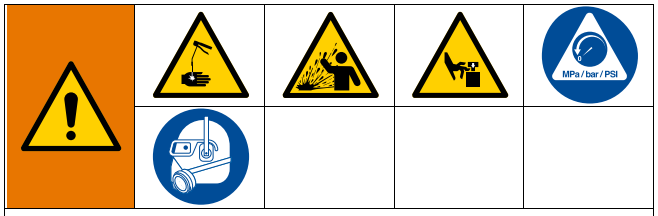

This equipment stays pressurized until pressure is manually relieved. To help prevent serious injury from pressurized fluid, such as skin injection, splashing fluid and moving parts, follow the Pressure Relief Procedure when you stop dispensing and before cleaning, checking, or servicing the equipment.

1. Close the bleed-type master air valve (F, FIG. 1, page 6) (required in the system).
2. Relieve pressure in the system using two wrenches working in opposite directions on the pump outlet (E) and lubrication line fitting (G) to slowly loosen the fitting until it is loose and no more lubricant or air is leaking out of the fitting (FIG. 8).

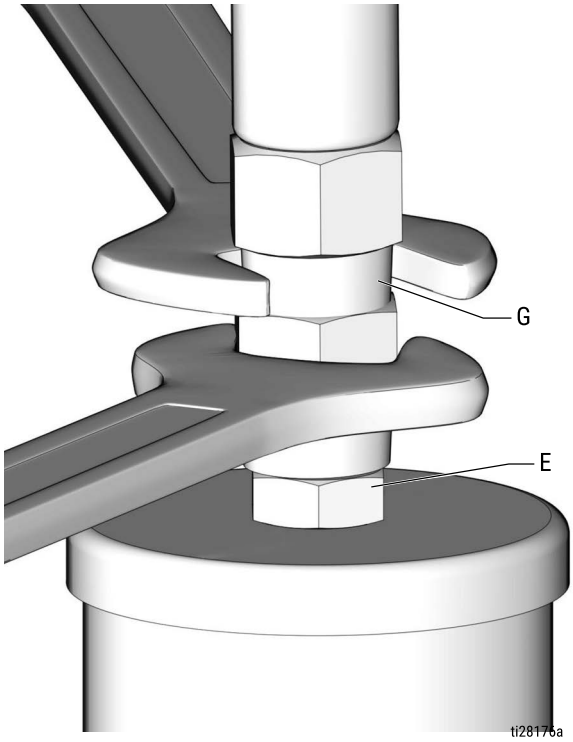

FIG. 8

Pump

Start Up

1. Verify reservoir is filled with lubricant and system has been primed (see **Prime**, page 9).
2. Turn on the lubrication controller (J) power switch.
3. Program the lubrication controller to actuate the solenoid valve (C).

   NOTE: See the lubrication controller instruction manual included with the system for these instructions.

4. Open air regulators and master air valves.

NOTE: Never allow the pump to run dry of the material being the pumped.

NOTICE
Running the pump dry will cause an air lock. To prevent an air lock, do not run the pump without lubricant. Always refill the pump before it is empty.

At the start of a the pump cycle:

a. The air solenoid (C) supplies air to the pump air inlet (P).

b. On the pump forward stroke, lubricant is dispensed to all the injectors.

c. The pump is supplied with air through the air inlet (R).

d. The pump makes a return stroke, venting the system pressure back to the pump and resetting all of the injector.

Low Level Switch

As grease is dispensed, the follower plate (22) travels down the reservoir. When it gets close to the low level switch (LSS) the magnet (28) on the bottom of the follower plate assembly activates the normally closed low level switch; opening the switch and sending a signal to the lubricator controller (J) (FIG. 9).

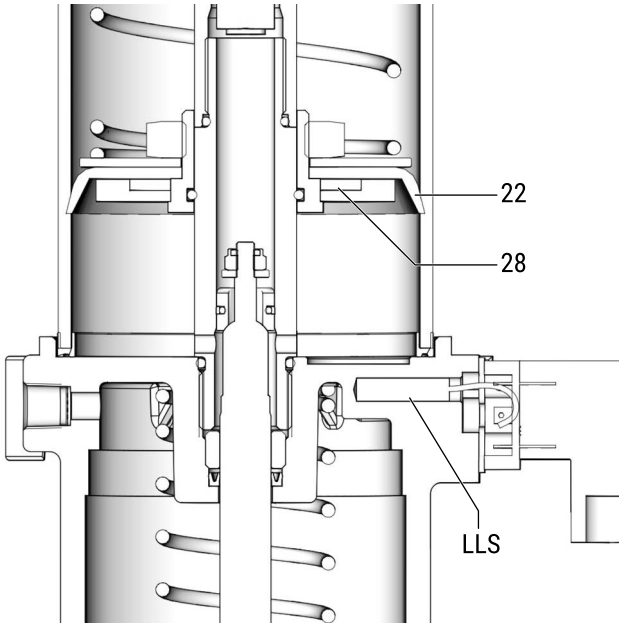

FIG. 9

Shut Down

Refer to FIG. 1, page 6, for the following instruction

To shut down the system:

a. Close the bleed-type master air valve (F).

b. Turn off electrical supply to the lubrication controller (J).

Lubrication System Sizing and Calculation Guidelines

Table 1: Lubricant Output and Pressure - US

NOTE: The lubricant output per pump stroke must be less than the amount of lubricant discharged per pump stroke.

1	2	3	4	5		6		7	
Injector Type	Max Injector Output cu. in.	Injector Volume to Dispense and Charge cu. in.	Max Pump Lubricant Output / Stroke cu. in.	Minimum Pressure		Maximum Pressure		Recommended Pressure	
				Output PSI	Required Air PSI	Output PSI	Required Air PSI	Output PSI	Required Air PSI
GL-1	0.080	0.011	0.58	1850	66	3500	120	2500	86
GL-32	0.008	0.016		1200	46			1500	58
GL-33	0.003	0.006							

Table 2: Lubricant Output and Pressure - Metric

1	2	3	4	5		6		7	
Injector Type	Max Injector Output cc	Injector Volume to Dispense and Charge cc	Max Pump Lubricant Output / Stroke cc	Minimum Pressure		Maximum Pressure		Recommended Pressure	
				Output MPA (bar)	Required Air MPA (bar)	Output MPA (bar)	Required Air MPA (bar)	Output MPA (bar)	Required Air MPA (bar)
GL-1	1.13	2.26	9.5	12.7 (127.6)	0.45 (4.5)	24 (241.3)	0.83 (8.3)	17.2 (172.4)	0.59 (5.9)
GL-32	0.13	0.262		8.3 (82.7)	0.3 (3.2)			10.3 (103)	0.4 (4.0)
GL-33	0.049	0.098							

1. Total Injector Volume to Dispense and Charge
   a. Add together the total number of injectors in the system.
   b. From Table 1 or Table 2, find the Injector Type in the first column and the related Injector Volume to Charge in the third column. Multiply this value by the total number of injectors determined in Step a.
2. Calculate the volume of lubricant in the pipeline (G):
   a. Use the pipe's inside diameter (ID) measurement to calculate the area of the pipe.
   b. Measure the length of the pipe (G) only. Do not include the feeder lines (S) in this calculation.
   c. Multiply the area of the pipe (calculated in Step a) by the length of the pipe (measured in Step b).
3. Calculate line expansion and fluid compression in the pipe using the 10 percent rule - multiply the volume calculated in Step 2 by 10 percent.
4. Calculate the Total System Volume required.
   a. Add together the total from Step 1 and Step 3 only. Do not include Step 2.
   b. The Total System Volume required must be less than the Pump Lubricant Output / Stroke provided in the fourth column of Table 1 or Table 2.
   c. If the Total System Volume required is greater than the Pump Lubricant Output / Stroke provided in the fourth column of Table 1 or Table 2, split the system into two or more systems.

Repair

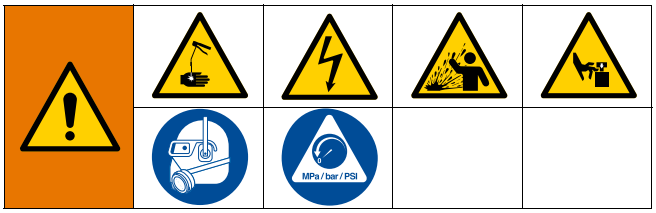

Seal Replacement

NOTE: For most seal replacement procedures, the pump should be completely removed from service and clamped in a vise. For only replacing the reservoir and/or reservoir seals, it is not necessary to remove the pump from the service location. The following instructions cover the complete disassembly of the pump. The pump repair may not require total pump disassembly.

Disassembly

1. Turn off the air supply and disconnect the air lines to the pump.
2. Disconnect the electrical connections to the lubrication controller.
3. Follow the **Pressure Relief Procedure**, page 11.
4. Disconnect the supply line (G, page 6) from the pump outlet (E, page 6).
5. Remove the fill cap (43), then use a wrench to loosen and slowly remove the fill stud (42). (FIG. 10).

   NOTE: After the fill stud is removed, the spring compressing the follower plate will force the grease out of the reservoir.

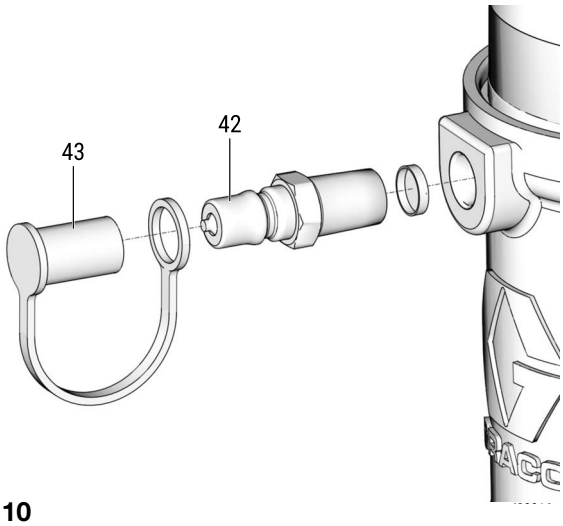

FIG. 10

6. Collect the drained grease in a pail or waste container. Dispose of grease according to all regulations for proper disposal.
7. Remove the mounting bolts (FIG. 11) and remove the pump from service.

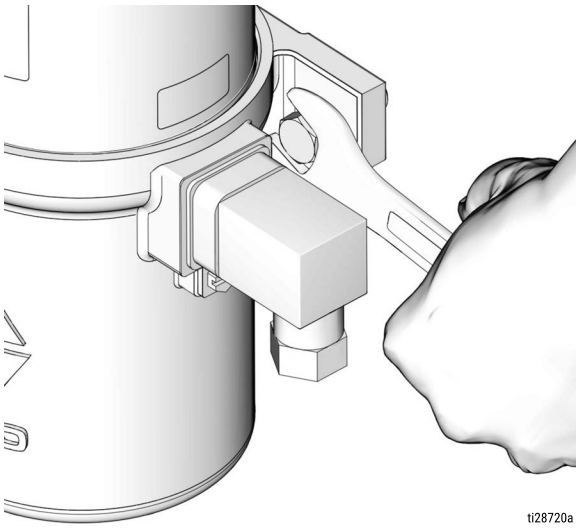

FIG. 11

8. Clamp the pump base in a vise as shown in FIG. 12. Use a soft-jaw vise or place a rag in the vise jaws to protect the surface of the pump base.

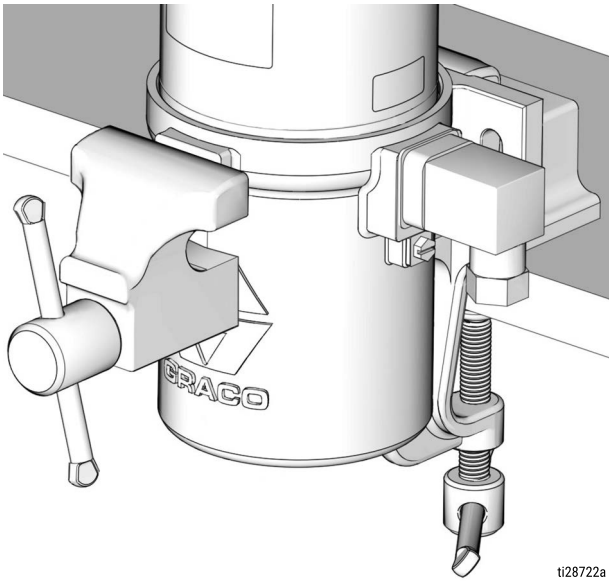

FIG. 12

Reservoir Gaskets (10)

9. The cover (18) is spring loaded. Push on the top of the cover. and at the same time, use a wrench to loosen and remove the nut (17) from the reservoir cover (18) (FIG. 13).

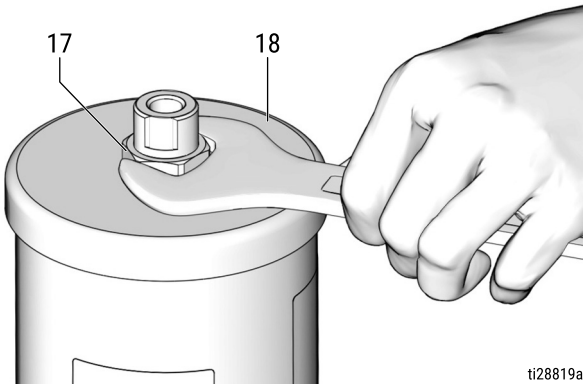

FIG. 13

10. Remove the cover (18) and spring (15) from the reservoir (11).

11. Remove the reservoir (11) from the air motor cylinder (3) (FIG. 14). If replacing the reservoir gaskets (10), remove gaskets from the reservoir. Dispose of the gaskets according to all regulations for proper disposal.

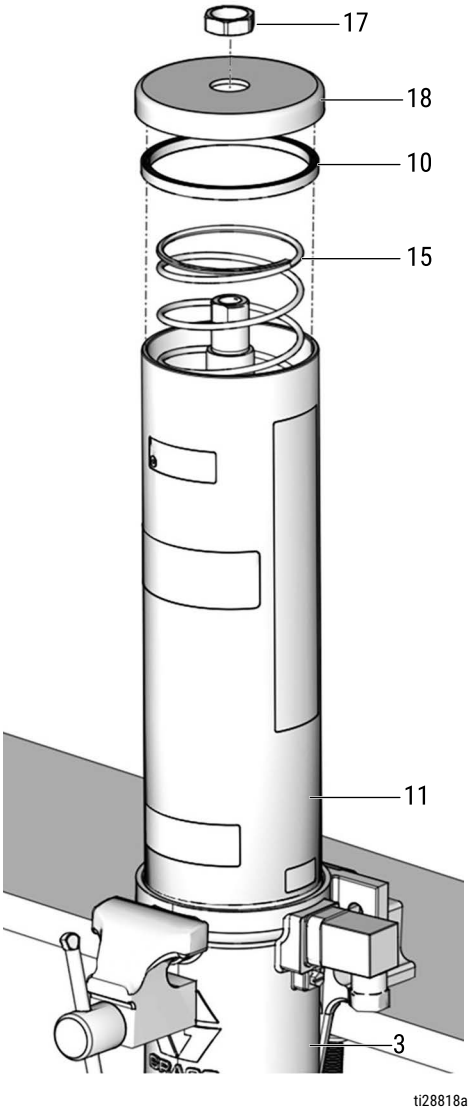

FIG. 14

Outlet Tube O-Ring (13) and Pump Cylinder O-Ring (9)

12. Securely hold the nut (3a), located on the bottom of the pump cylinder (12), in place with a wrench. Secure a second wrench on the flats of the outlet tube (14). Turn the outlet tube counter-clockwise to loosen and remove it from the pump cylinder (12) (FIG. 15).

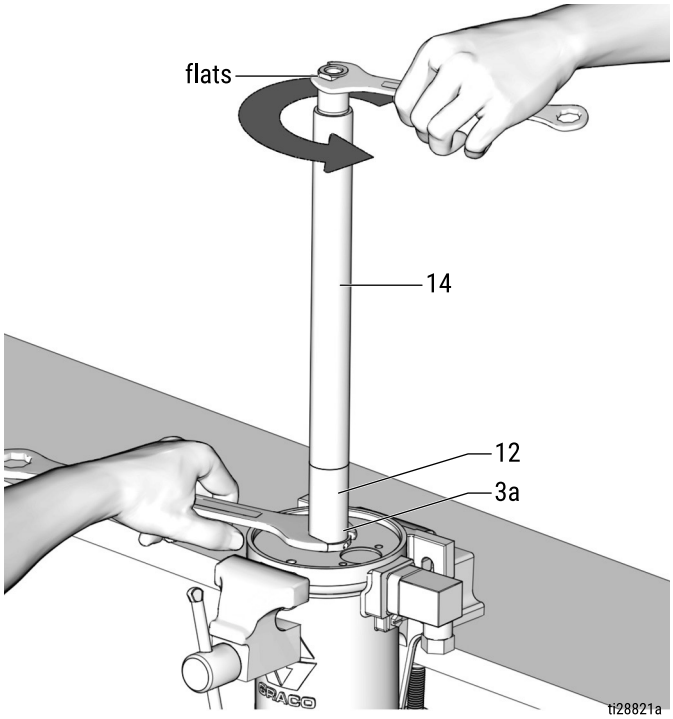

FIG. 15

13. Loosen the nut (3a) and remove the pump cylinder (12) from the air motor cylinder (3) (FIG. 16).

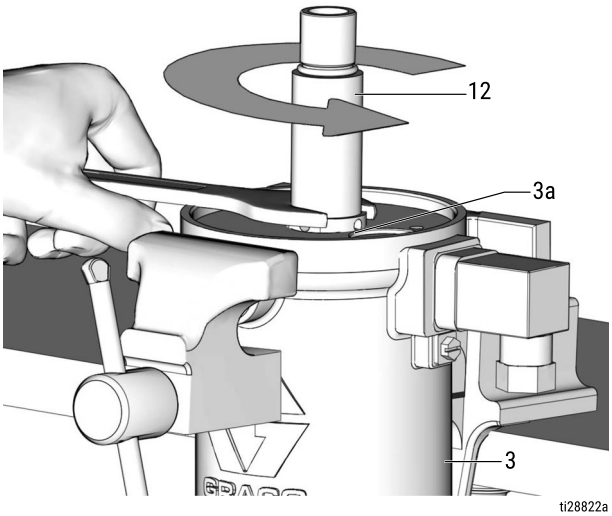

FIG. 16

14. Remove the o-ring (13) from the outlet tube (14). Remove the o-ring (9) from the pump cylinder (12). Dispose of the o-rings according to all regulations for proper disposal (FIG. 17).

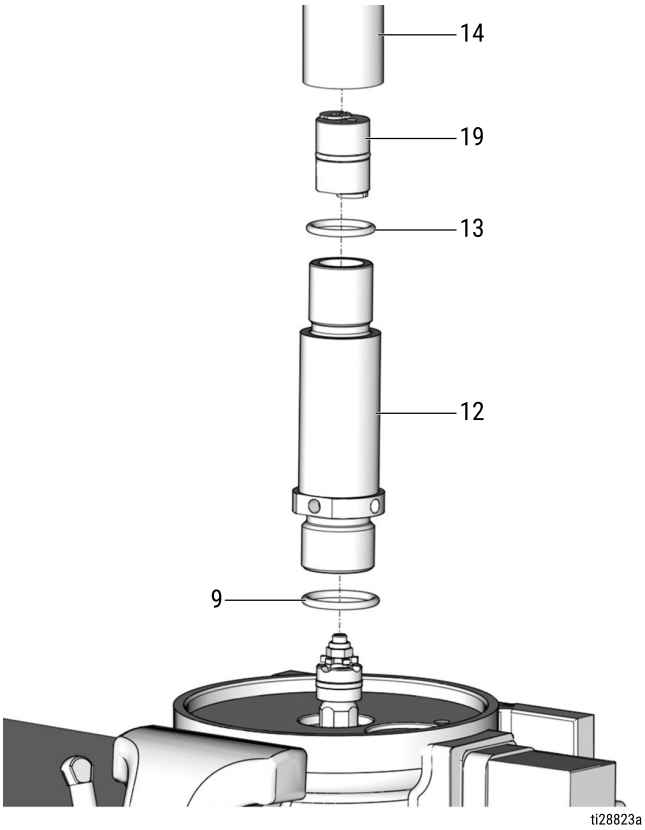

FIG. 17

Pump Piston Subassembly (33)

15. Secure a wrench on the flats of the piston rod (34). Use a second wrench to remove the lock nut (31) and star washer (32) from the top of the piston (FIG. 18).

16. Remove the lock nut and star washer. Keep these parts for reassembly.

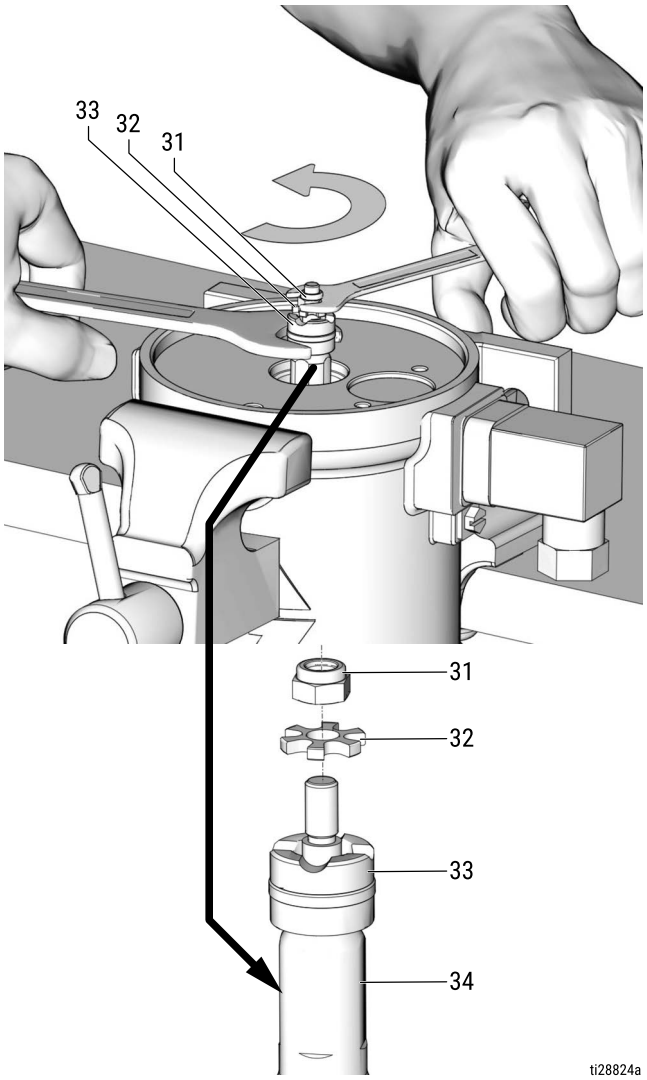

FIG. 18

17. Examine the piston assembly (33) for scratches and other wear and damage. If damaged, replace the pump piston assembly (33).

18. Reposition the air motor cylinder in vise to access the bottom of the air motor cylinder (FIG. 19).

19. Secure a wrench on the cover nut (1a). Turn it counter-clockwise to loosen and remove the cover (1) from bottom of the air motor cylinder. (FIG. 20).

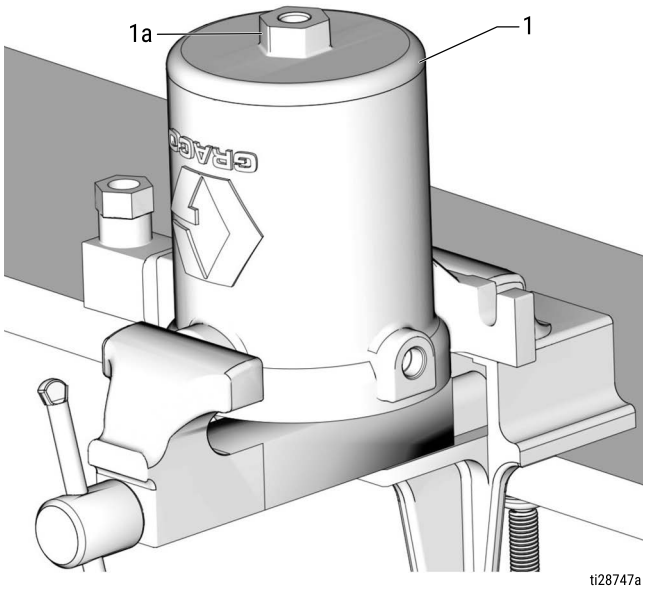

FIG. 19

NOTE: There is a spring (6) (FIG. 20) inside the air motor cylinder (3) under the piston (5). Push on the top of the cover (1) for resistance and to hold it down while loosening the cover screws (1A) (see FIG. 19).

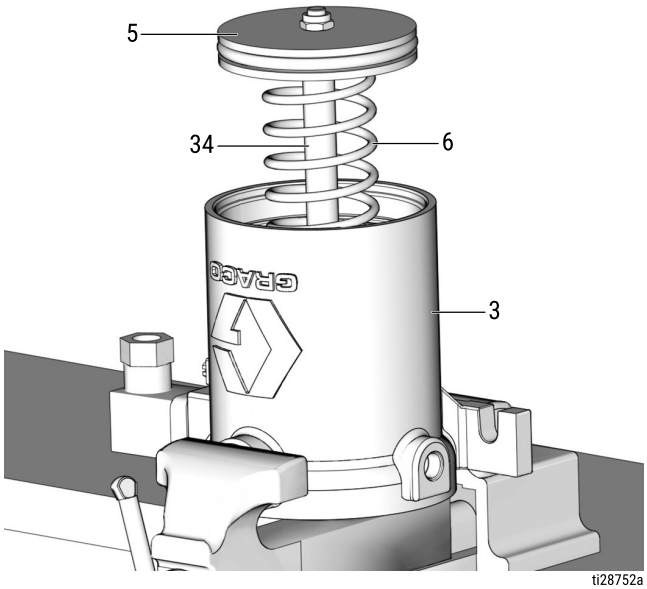

FIG. 20

20. Remove the cover (1), the cover o-ring (2,) and the spring (6). Dispose of the o-ring according to all regulations for proper disposal (FIG. 21).

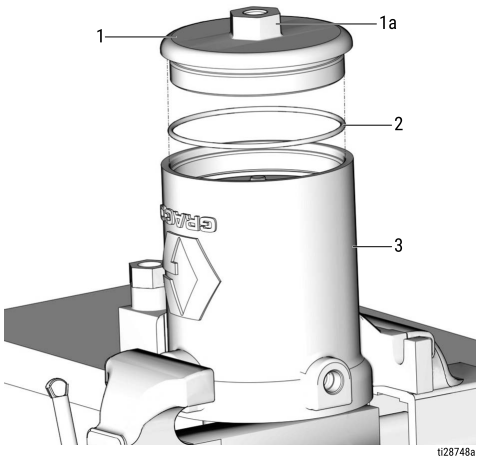

FIG. 21

Piston Rod O-Ring (36) and Piston Seal (4).

21. Remove the piston rod (34), the piston (5), and the spring (6) from the air motor cylinder (3) (see FIG. 20, page 17).

22. Separate the piston rod (34) and the piston (5) using two wrenches, working in opposite directions. Secure one wrench to flats of piston rod and the second wrench to loosen the nut (37) (FIG. 22).

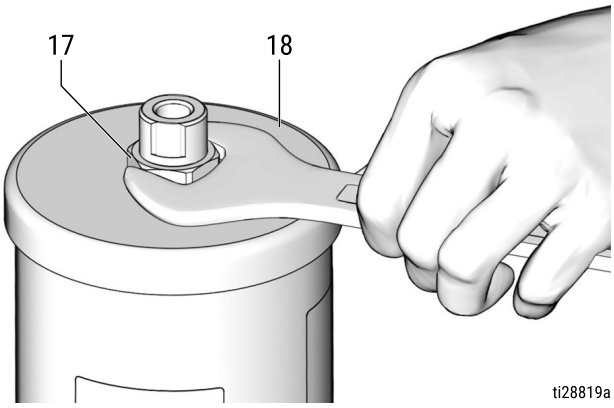

FIG. 22

23. Remove the o-ring (4) from the piston (5) (FIG. 23).

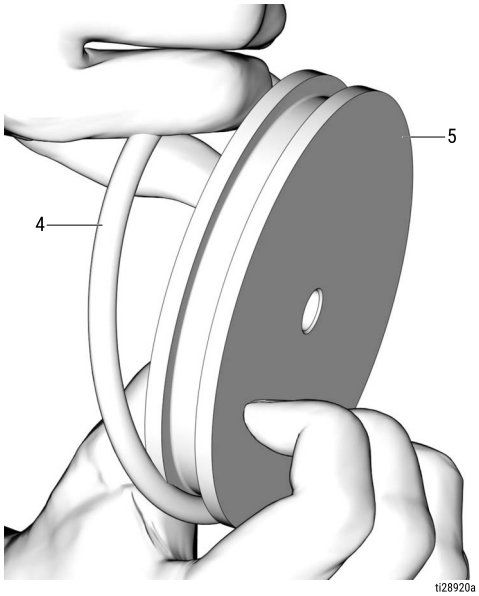

FIG. 23

24. Use a pick to remove the o-ring (34a) from the piston rod (34) (FIG. 24).

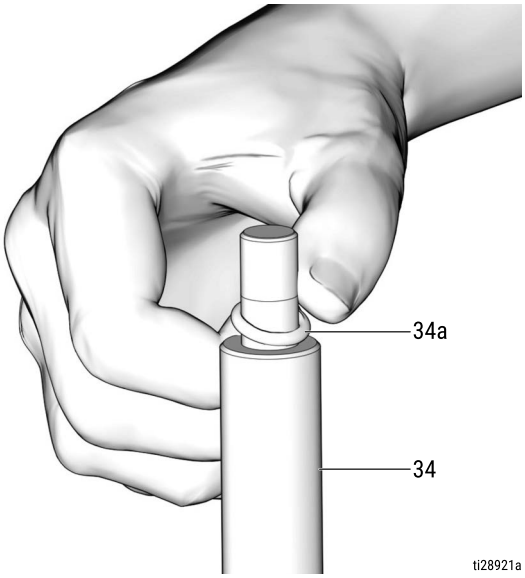

FIG. 24

25. Dispose of the piston seal (4), the o-ring (34a), and the nut (37) according to all regulations for proper disposal.

26. Use a pick to remove the bushing (35) and u-cup seal (36) (FIG. 25).

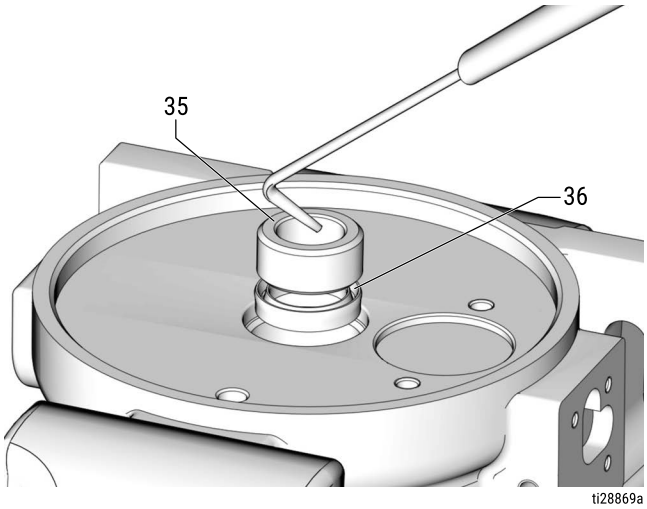

FIG. 25

27. Use a smooth, long brass or aluminum rod, free of sharp edges and burrs, to push the check valve assembly (19) out of the outlet tube (14) (FIG. 26).

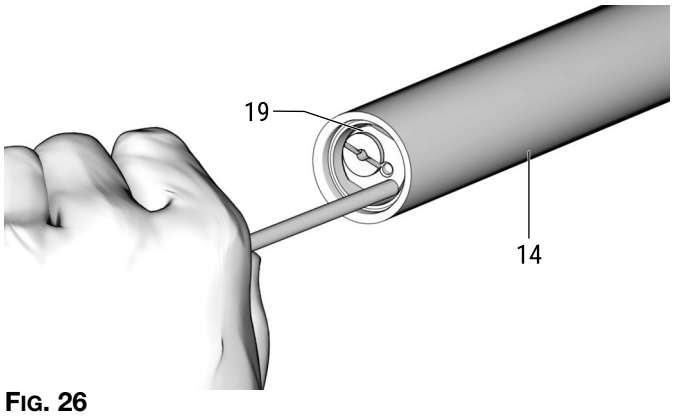

FIG. 26

28. Dispose of the check valve assembly (19) according to all regulations for proper disposal.

Reassembly

Use all of the new parts included in the repair / service kit, even if the old parts do not appear to be worn or damaged, and dispose of the old parts according to all regulations for proper disposal.

1. Install u-cup seal (36) with lips facing up, and bushing (35) in air cylinder (3) (FIG. 27).

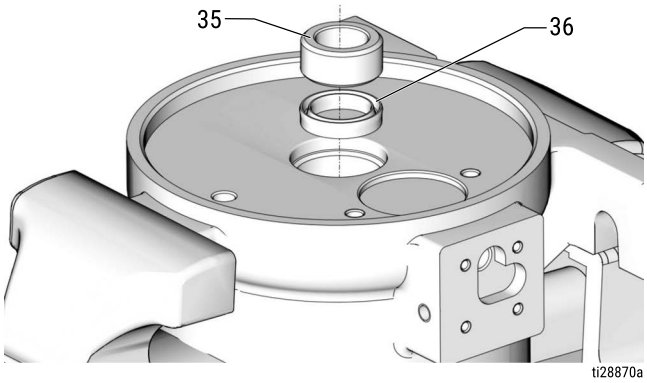

FIG. 27

Check the Valve Assembly (19)

2. Coat the new check valve assembly (19) with a thin layer of grease.

3. Use a smooth, long brass or aluminum rod, free of sharp edges and burrs, to push the check valve assembly (19) into place in the outlet tube (14) (FIG. 28).

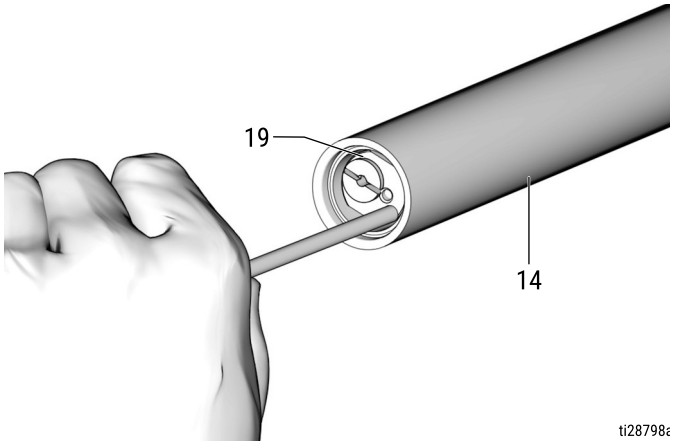

FIG. 28

Piston Rod O-Ring (34a) and Piston Seal (4)

NOTE: Do not clamp the piston rod (34) in vise.

4. Use a clean cloth to wipe down the piston rod (34) and the piston (5) to remove any dirt or contaminants. Inspect surfaces for any scratches or damage. Replace damaged parts.

5. Apply a thin layer of grease to the o-ring (34a). Install o-ring over the grooves of piston rod (34) (FIG. 29).

   NOTE: If needed, a pick can be used to seat the o-ring over the grooves of the piston rod (13).

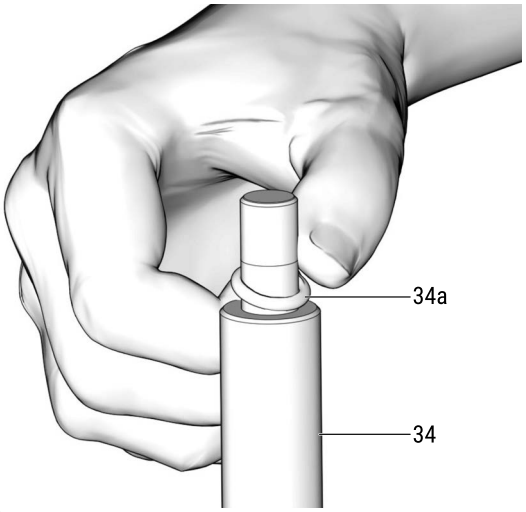

FIG. 29

6. Push the piston (5) over the end of the piston rod (34) until seated on the rod (FIG. 30).

   NOTE: A pop sound occurs when placed correctly.

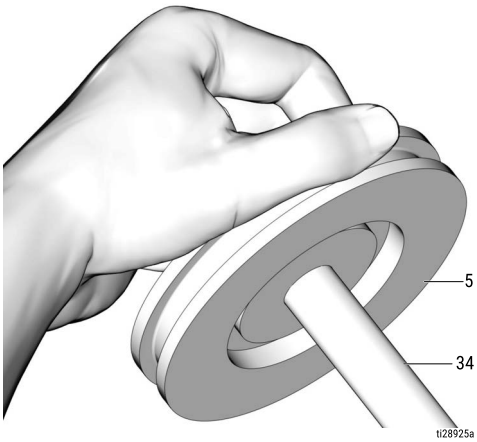

FIG. 30

7. Install the nut (37) over the end of the piston rod (34). Use two wrenches, working in opposite directions to tighten the nut. Secure one open end wrench to flats of piston rod and use the second wrench to tighten the nut, as shown in FIG. 31. Torque nut to 13 to 15 ft-lb (17.6 to 20.3 N•m).

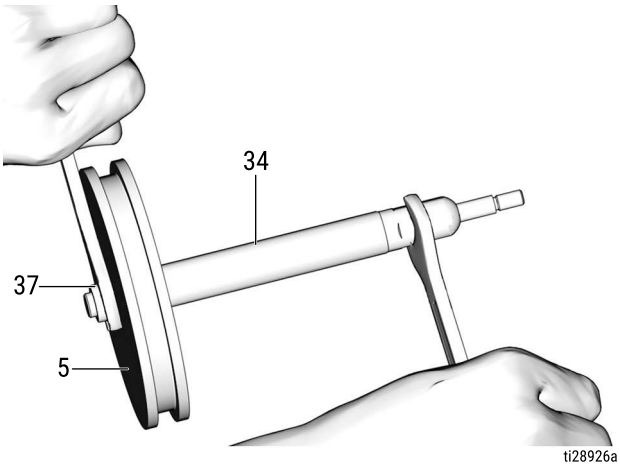

FIG. 31

8. Apply a thin layer of grease to the piston seal (4). Install the seal around the piston (5), as shown in FIG. 32.

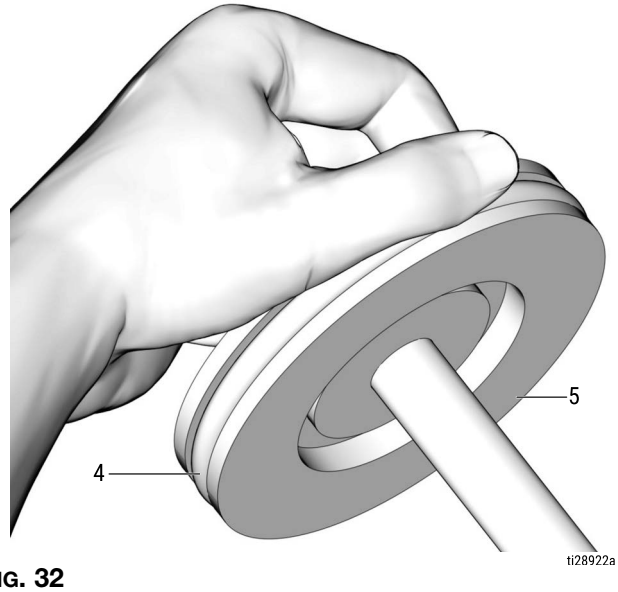

FIG. 32

9. Install the spring (6) over the piston rod (34) and install spring and piston rod into the air cylinder (3) (FIG. 33).

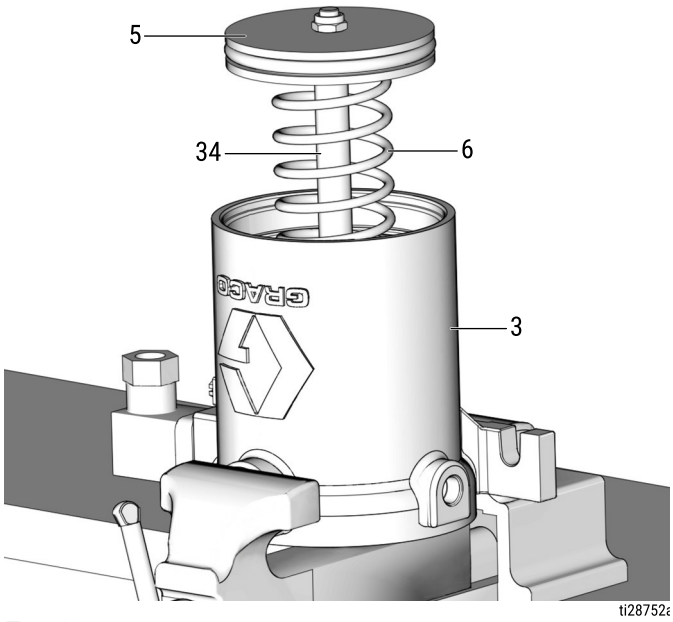

FIG. 33

10. Apply a thin layer of grease to the cover o-ring (2). Install the o-ring to cover (1) (FIG. 34).

11. Install the cover in bottom of air motor cylinder (3). Push on the top of the cover to seat it and compress the spring. Use a wrench on nut (1a) to turn and tighten the cover securely, then torque to 28 to 32 ft-lb (37.9 to 43.4 N•m) (FIG. 34).

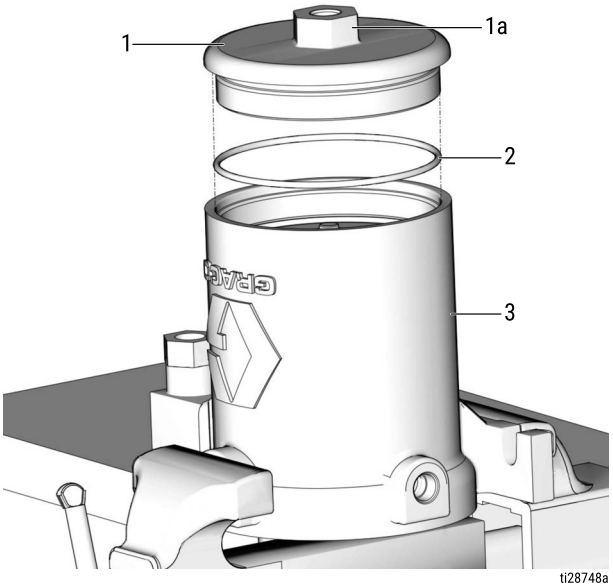

FIG. 34

12. Reposition the air motor cylinder in vise to access the top of the air motor cylinder, as shown in FIG. 35.

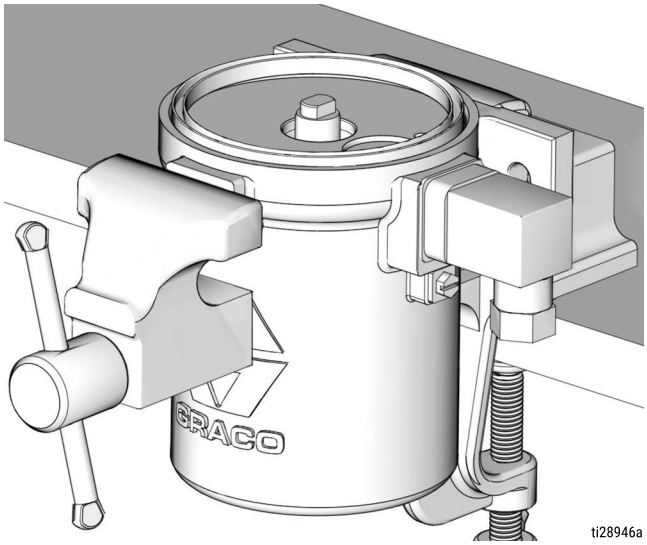

FIG. 35

Pump Piston Subassembly (33)

13. Apply a thin layer of grease to the piston seal (33). Install the piston seal over the piston rod (34).

14. Install the star washer (32) and the lock nut (31) on the piston rod (34), as shown in FIG. 36

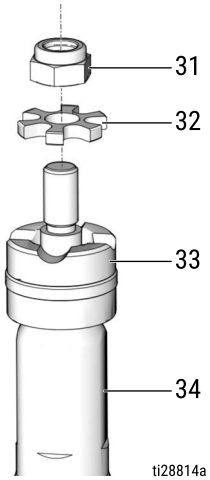

FIG. 36

15. Use a wrench to tighten the lock nut (31).

Outlet Tube O-ring (13) and Pump Cylinder O-ring (9).

16. Apply a thin layer of grease to the outlet tube o-ring (13) and the pump cylinder o-ring (9) and install the o-rings on the outlet tube (14) and the pump cylinder (12) (FIG. 37).

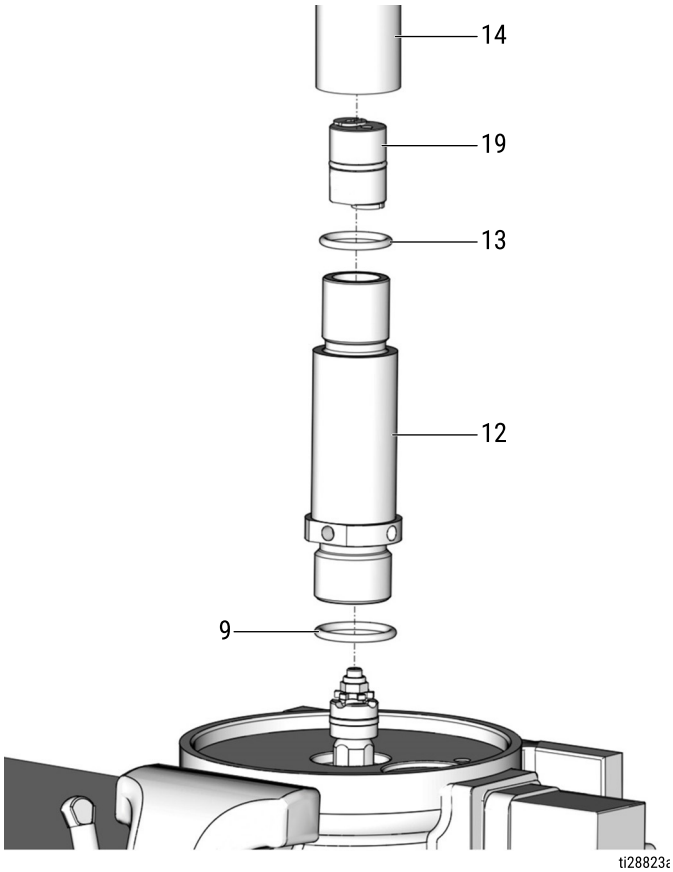

FIG. 37

17. Install the pump cylinder (12) into the air motor cylinder (3). Use a wrench to tighten nut (3a) securely. Torque to 28 to 32 ft. lbs. (37.9 to 43.4 N.m).

18. Install the outlet tube (14) on the pump cylinder (12). Securely hold the nut (3a), located on the bottom of the pump cylinder (12), in place with a wrench. Secure a second wrench on the flats of the outlet tube (14). Turn the outlet tube clockwise to tighten it to the pump cylinder (12) (FIG. 38). Torque to 28 to 32 ft-lb (37.9 to 43.4 N•m).

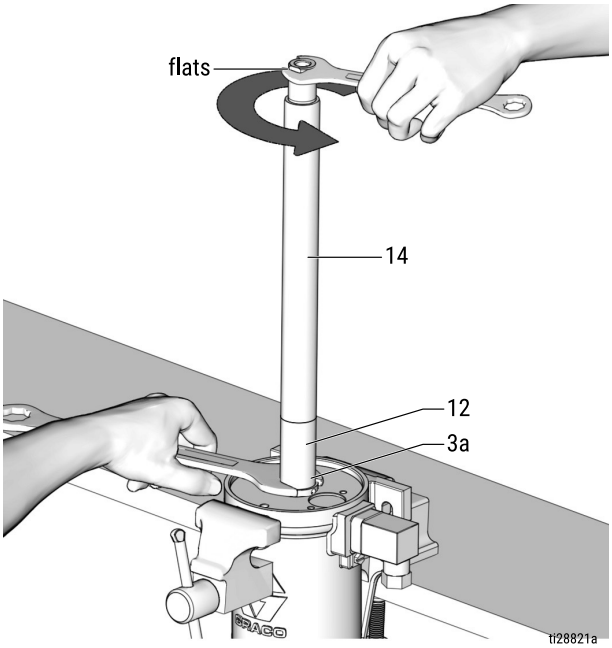

FIG. 38

Reservoir Gaskets (10)

19. Install the reservoir gaskets (10) to the top and the bottom of the reservoir (11), as shown in FIG. 39.

20. Install the reservoir (11) into the air motor cylinder (3) (FIG. 39).

21. Install the spring (15) inside the reservoir (11) (FIG. 39).

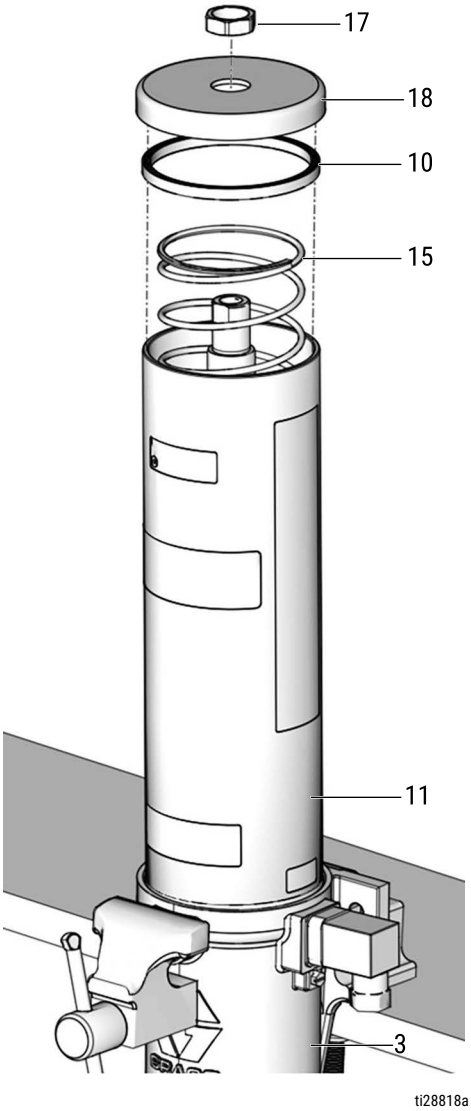

FIG. 39

22. Install the cover (18) on the reservoir (11). Push on the top of the cover and compress the spring. At the same time, tighten and then torque nut (17) to 45 - 55 in-lb (5.1 to 6.2 N•m) (FIG. 40).

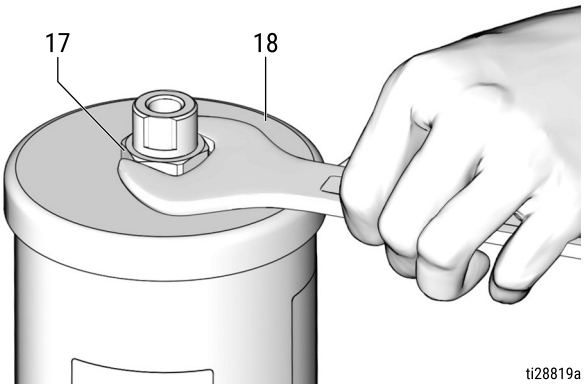

FIG. 40

23. Remove the pump assembly from the vise and reinstall the pump in the service location. See Installation Instructions beginning on page 6.

Recycling and Disposal

End of Product Life

At the end of the product's useful life, dismantle and recycle it in a responsible manner.

- Perform the **Pressure Relief Procedure**, page 11.
- Drain and dispose of fluids according to applicable regulations. Refer to the material manufacturer's Safety Data Sheet.
- Remove motors, batteries, circuit boards, LCDs (liquid crystal displays), and other electronic components. Recycle according to applicable regulations.
- Do not dispose of batteries or electronic components with household or commercial waste.

- Deliver remaining product to a recycling facility.

Troubleshooting

Follow **Pressure Relief Procedure**, page 11, before checking or repairing the pump.

Check all possible problems and causes before disassembling the pump.

Problem	Cause	Solution
The pump is not operating. No lubricant flow.	No air	1. Adjust the air pressure/supply. 2. Open the bleed-type master air valve (F) (page 6).
	No lubricant in the reservoir	Fill the reservoir.
	Losing prime	1. Remove trapped air (see Air Lock, page 10). 2. Prime the pump (Priming, page 9).
Injectors not cycling, or only some of the injectors are operating	No lubricant flow	See Pump is not operating. No lubricant flow in Troubleshooting table.
	Low pressure or no pressure	1. Check piping for leaks. If a leak is detected, repair or replace piping. 2. Check injectors for leaks. If a leak is detected, repair or replace injector. 3. If the total system volume is greater than the Pump Lubricant Output provided in Table 1 or Table 2, split the system into two or more systems. Refer to Lubrication System Sizing and Calibration Guide, page 13.
	Pump seals are bad	Replace seals (17K553). See Parts, page 27.

Parts

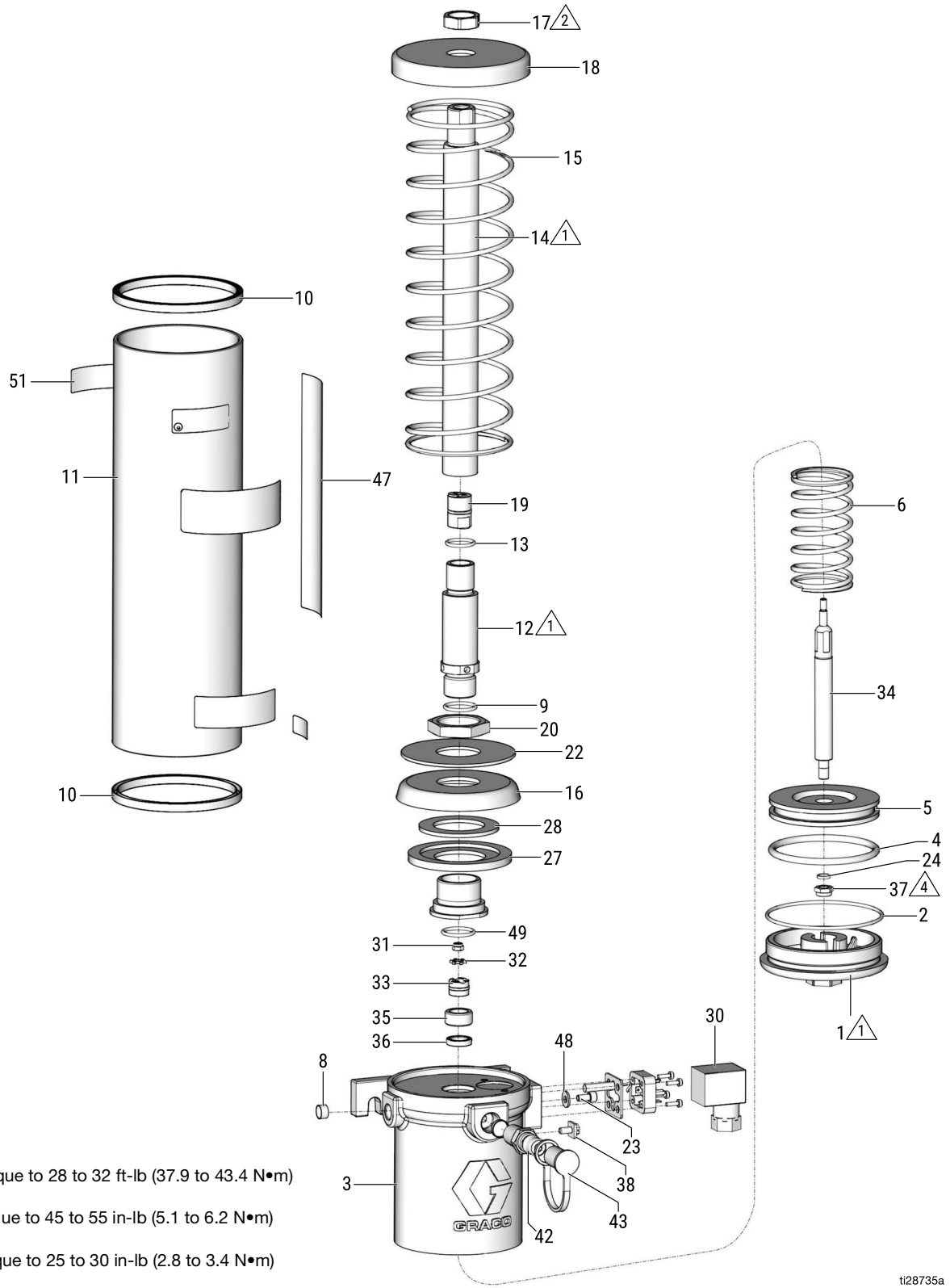

1 Torque to 28 to 32 ft-lb (37.9 to 43.4 N•m)

2 Torque to 45 to 55 in-lb (5.1 to 6.2 N•m)

3 Torque to 25 to 30 in-lb (2.8 to 3.4 N•m)

4 Torque to 155 to 165 in-lb (17.5 to 18.6 N•m)

Parts

Ref	Part No.	Description	Qty
1	17J825	COVER, Air motor	1
2★	17J826	SEAL, o-ring	1
3	17J828	CYLINDER, air motor, low level, models 24Z052, 24Z053, 24Z055, 24Z056, 24Z058, 24Z059, 24Z061, 24Z062	1
	17J829	CYLINDER, air motor, models 24Z051, 24Z054, 24Z057, 24Z060	1
4★	17J830	SEAL, o-ring	1
5	17J839	PISTON, air motor	1
6	17J833	SPRING, compression	1
8	U10013	SCREEN, brass, regulator	2
9★	118563	PACKING, o-ring	1
10†◆	557332	GASKET, reservoir	2
11		RESERVOIR, plastic, 4.0 lb (2 L) models 24Z057 - 24Z062	1
		RESERVOIR, plastic, 1 lb (0.6L), models 24Z051 - 24Z056	1
	✚	RESERVOIR, plastic, 3.0 lb (1.5L) model 25V016	
12	17J853	CYLINDER, pump	1
13★	110926	PACKING, o-ring	1
14	17K564	TUBE, lube outlet, 4 lb (2 L), models 24Z057 - 24Z059	1
	17K565	TUBE, lube outlet, 1 lb (0.6 L), models 24Z052, 24Z053	1
	18F854	TUBE, lube outlet, 3 lb (1.5L) model 25V016	
15	17K567	SPRING, compression, models 24Z057 - 24Z059	1
	17K558	SPRING, compression, models 24Z052, 24Z053	
16★	17K554	CUP, follower	1
17	17J844	NUT, 7/8-14UNF-2B	1
18	17J846	COVER, reservoir	1
19	24Z278	HOUSING, check valve	1
20	17K556	NUT, 1 3/8-12UNF-2B	1
21	17K557	BUSHING, follow plate	1
22	17K555	PLATE, follower,	1
23❖⁕	115266	SCREW, cap, socket head, models 24Z052, 24Z053, 24Z058, 24Z059	1

Ref	Part No.	Description	Qty
24★	118892	O-ring	1
27	17K560	HOLDER, magnet	1
28	17K559	MAGNET, low level, models 24Z052, 24Z053, 24Z058, 24Z059	1
29	17C668❖	CABLE, low level, switch, NO, models 24Z052, 24Z058	1
	128741⁕	CABLE, reed switch to DIN, NC, models 24Z053, 24Z059	1
30❖⁕	125520	CONNECTOR, DIN form A, 4 PIN, models 24Z052, 24Z053, 24Z058, 24Z059	1
31★	105332	NUT, lock	1
32★	17K200	WASHER	1
33★	17K553	PUMP PISTON, subassembly	1
34	17J835	ROD, displacement	1
35★	17J852	BUSHING	1
36★	17J834	SEAL, u-cup	1
37★	16C022	NUT, hex	1
38	116343	SCREW, ground	1
42	557880	STUD, fill	1
43	557875	CAP, dust 3/4	1
48❖⁕	140042	WASHER, models 24Z052, 24Z053, 24Z058, 24Z059	1
49★	110782	PACKING, o-ring	1
47▲†◆	17C560	LABEL, safety, warning, pressure	1
51▲†◆	17C562	LABEL, instruction	2
54	128338	ADAPTER, NPT to BSPP, models	2

▲ *Replacement Danger and Warning labels, tags and cards are available at no cost.*
★ *Parts included in seal Kit 24Z211*
† *Parts included in Reservoir Kit 24Z206*
◆ *Parts included in Reservoir Kit 24Z207*
❖ *Parts included in Kit 24Z215*
⁕ *Parts included in Kit 24Z214*
✚ *Parts included in Reservoir kit*

Dimensions

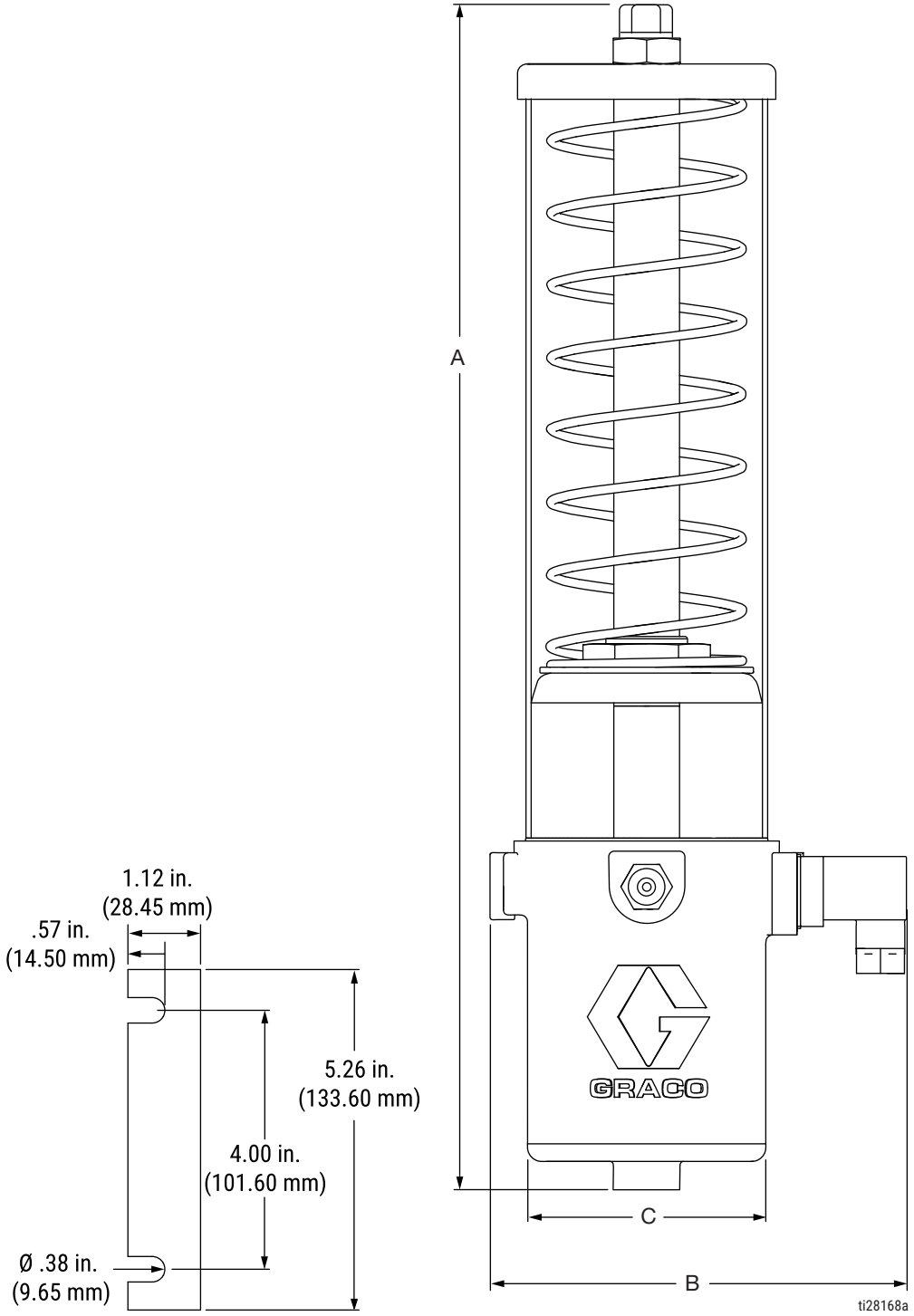
A
1.12 in.
(28.45 mm)
.57 in.
(14.50 mm)
5.26 in.
(133.60 mm)
4.00 in.
(101.60 mm)
Ø .38 in.
(9.65 mm)
C
B
GRACO
ti28168a

Dimensions: US - inches (See Dimensions and Layout drawing, page 28)

Models	A	B	C
24Z052, 24Z053	12.53 ± 0.11	5.25 ± 0.11	6.5 ± 0.11
		6.9 ± 0.11	
24Z057	19.83 ± 0.11	5.25 ± 0.11	
24Z058, 24Z059		6.9 ± 0.11	
25V016	18.33 ± 0.11	6.9 ± 0.11	

Dimensions: Metric - mm (See Dimensions and Layout drawing, page 28)

Models	A	B	C
24Z052, 24Z053	318.3 ± 3.0	133.5 ± 3.0	166.5 ± 3.0
		177.4 ± 3.0	
24Z057	503.8 ± 3.0	133.5 ± 3.0	
24Z058, 24Z059		177.4 ± 3.0	
25V016	465.6 ± 3.0	177.4 ± 3.0	

Technical Specifications

LubePro 29:1 Vertical Grease Pump		
	US	**Metric**
Maximum fluid working pressure*	3500 psi	24 MPa, 241 bar
Fluid	NLGI #00, 0, 1, 2	
Pressure ratio	29:1	
Pump output	0.58 cu. inch/stroke	
Reservoir capacity	1 lb (30 cu in.) or 4 lb (120 cu. in.)	
Maximum air inlet pressure	125 psi	0.86 MPa, 8.6 bar
Minimum air inlet pressure	15 psi	0.10 MPa, 1.03 bar
Air inlet size	1/4 NPT(F), BSPP Adapter for EU	
Fluid outlet size	1/4 NPT(F)	
Filling	Quick coupling fitting 3/8 NPT(F) x 1/4 in.	
Wetted Parts	Pump: zinc plated steel, casting aluminum ZL101, magnet, plastic POM Reservoir: polycarbonate Seals: Buna-N (nitrile), PTFE, PEEK	
Approximate weight	11.0 lbs	5.0 kg
Operating temperature	14°F to 149°F	-10°C to 65°C
Low Level		
Maximum switching current	0.5 Amps	
Voltage	12-240 DC/AC	
IP ratings	IP65 when plugged and screwed down	
Cable diameter	0.315 to 0.394 inches	8 to 10 mm
Wire size	20 to 16 AWG	0.5 to 1.5 mm^2

*Tested in ambient temperature with NLGI #2 grease.

Input Air Pressure Nominal	15	20	30	40.0	80.0	120.0	160.0
Output Grease Pressure	341	493	800	1160	2352	3602	4825

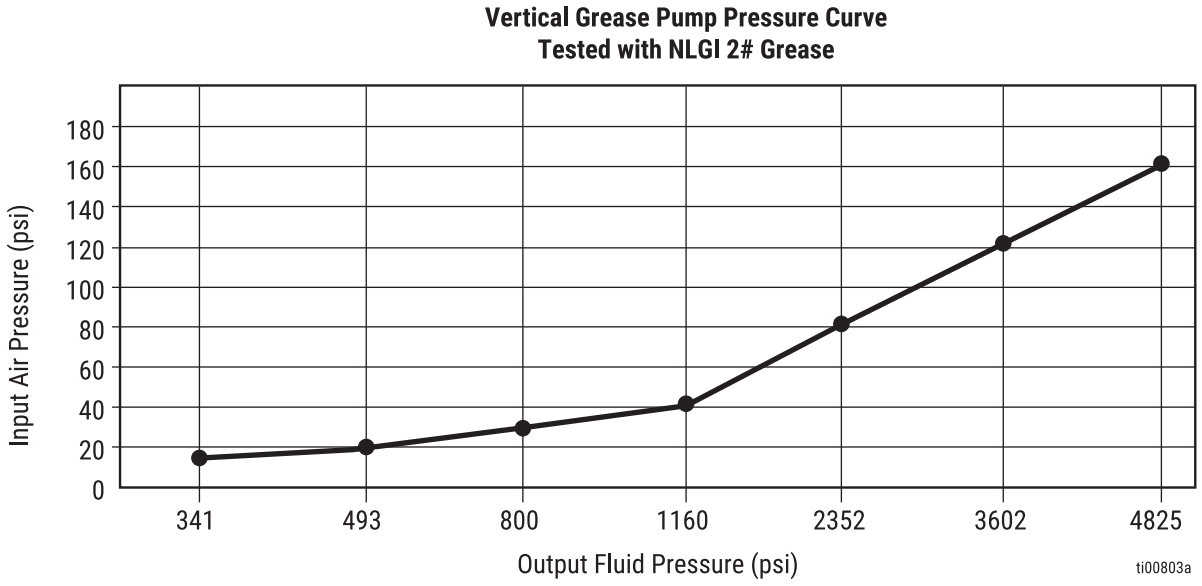

California Proposition 65

CALIFORNIA RESIDENTS

⚠ **WARNING:** Cancer and reproductive harm – www.P65warnings.ca.gov.

Graco Standard Warranty

Graco warrants all equipment referenced in this document which is manufactured by Graco and bearing its name to be free from defects in material and workmanship on the date of sale to the original purchaser for use. With the exception of any special, extended, or limited warranty published by Graco, Graco will, for a period of twelve months from the date of sale, repair or replace any part of the equipment determined by Graco to be defective. This warranty applies only when the equipment is installed, operated and maintained in accordance with Graco's written recommendations.

This warranty does not cover, and Graco shall not be liable for general wear and tear, or any malfunction, damage or wear caused by faulty installation, misapplication, abrasion, corrosion, inadequate or improper maintenance, negligence, accident, tampering, or substitution of non-Graco component parts. Nor shall Graco be liable for malfunction, damage or wear caused by the incompatibility of Graco equipment with structures, accessories, equipment or materials not supplied by Graco, or the improper design, manufacture, installation, operation or maintenance of structures, accessories, equipment or materials not supplied by Graco.

This warranty is conditioned upon the prepaid return of the equipment claimed to be defective to an authorized Graco distributor for verification of the claimed defect. If the claimed defect is verified, Graco will repair or replace free of charge any defective parts. The equipment will be returned to the original purchaser transportation prepaid. If inspection of the equipment does not disclose any defect in material or workmanship, repairs will be made at a reasonable charge, which charges may include the costs of parts, labor, and transportation.

THIS WARRANTY IS EXCLUSIVE, AND IS IN LIEU OF ANY OTHER WARRANTIES, EXPRESS OR IMPLIED, INCLUDING BUT NOT LIMITED TO WARRANTY OF MERCHANTABILITY OR WARRANTY OF FITNESS FOR A PARTICULAR PURPOSE.

Graco's sole obligation and buyer's sole remedy for any breach of warranty shall be as set forth above. The buyer agrees that no other remedy (including, but not limited to, incidental or consequential damages for lost profits, lost sales, injury to person or property, or any other incidental or consequential loss) shall be available. Any action for breach of warranty must be brought within two (2) years of the date of sale.

GRACO MAKES NO WARRANTY, AND DISCLAIMS ALL IMPLIED WARRANTIES OF MERCHANTABILITY AND FITNESS FOR A PARTICULAR PURPOSE, IN CONNECTION WITH ACCESSORIES, EQUIPMENT, MATERIALS OR COMPONENTS SOLD BUT NOT MANUFACTURED BY GRACO. These items sold, but not manufactured by Graco (such as electric motors, switches, hose, etc.), are subject to the warranty, if any, of their manufacturer. Graco will provide purchaser with reasonable assistance in making any claim for breach of these warranties.

In no event will Graco be liable for indirect, incidental, special or consequential damages resulting from Graco supplying equipment hereunder, or the furnishing, performance, or use of any products or other goods sold hereto, whether due to a breach of contract, breach of warranty, the negligence of Graco, or otherwise.

FOR GRACO CANADA CUSTOMERS
The Parties acknowledge that they have required that the present document, as well as all documents, notices and legal proceedings entered into, given or instituted pursuant hereto or relating directly or indirectly hereto, be drawn up in English. Les parties reconnaissent avoir convenu que la rédaction du présente document sera en Anglais, ainsi que tous documents, avis et procédures judiciaires exécutés, donnés ou intentés, à la suite de ou en rapport, directement ou indirectement, avec les procédures concernées.

Graco Information

For the latest information about Graco products, visit www.graco.com.
For patent information, see www.graco.com/patents.
TO PLACE AN ORDER, contact your Graco distributor or call to identify the nearest distributor.
Toll Free Phone Number: 1-800-328-0211

All written and visual data contained in this document reflects the latest product information available at the time of publication. Graco reserves the right to make changes at any time without notice.

Original instructions. This manual contains English. MM 3A4096
Graco Headquarters: Minneapolis
International Offices: Belgium, China, Japan, Korea

GRACO INC. AND SUBSIDIARIES • P.O. BOX 1441 • MINNEAPOLIS MN 55440-1441 • USA
Copyright 2016, Graco Inc. All Graco manufacturing locations are registered to ISO 9001.
www.graco.com
Revision N, November 2025