FLENDER COUPLINGS
CATALOG **FLE 10.2**
EDITION 2026.1 EN

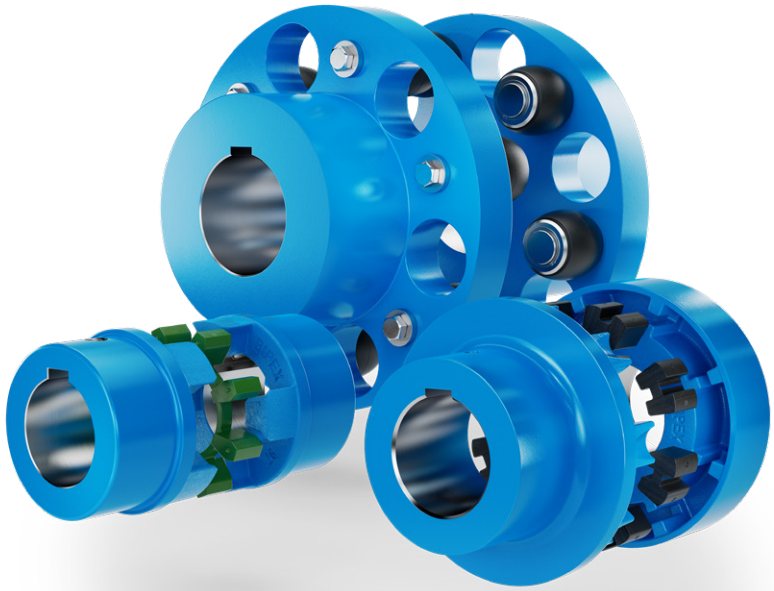

FLEXIBLE COUPLINGS
N-EUPEX, RUPEX AND BIPEX

flender.com

FLENDER

FLENDER

FLEXIBLE COUPLINGS

Catalog FLE 10.2 Edition 2026.1 EN

Introduction		E
Torsionally Rigid Gear Couplings	N-ZAPEX XW	4
	N-ZAPEX XN	5
Torsionally Rigid All-Steel Couplings	N-ARPEX, ARPEX	6
Flexible Couplings	N-EUPEX	7
	RUPEX	8
	BIPEX	9
Highly Flexible Couplings	ELPEX-B	10
	ELPEX-S	11
	ELPEX	12
Fluid Couplings	FLUDEX	13
Rigid Couplings	SKZF	16
Appendix		A

FLE 10 CATALOG GROUP

Product catalog FLE 10.1
FLEX-C10001-00-7600
Torsionally Rigid Couplings

Product catalog FLE 10.3
FLEX-C10003-00-7600
Highly Flexible Couplings

Product catalog FLE 10.2
FLEX-C10001-00-7600
Flexible Couplings

Product catalog FLE 10.4
FLEX-C10004-00-7600
Fluid Couplings

For further coupling catalogs, see page A/6

Product catalog FLE 10.5
FLEX-C10120-00-7600
High Performance Couplings

Product catalog FLE 10.7
FLEX-C10122-00-7600
Safety couplings

INTRODUCTION

E

The mechanical drive train comprises individual units such as motor, gear unit and driven machine. The coupling connects these component assemblies.
As well as the transmission of rotary motion and torque, other requirements may be made of the coupling.

- Compensation for shaft misalignment with low restorative forces
- Control of characteristic angular vibration frequency and damping
- Interruption or limitation of torque
- Noise insulation, electrical insulation

Couplings are frequently chosen after the machines to be connected have already been selected. Thanks to a large number of different coupling assembly options, specified marginal conditions for clearance and connection geometry can be met from the standard range. The coupling also performs secondary functions, e.g. providing a brake disk or brake drum for operating or blocking brakes, devices to record speed or the attachment of sprockets or pulleys.

Couplings are divided into two main groups, couplings and clutches.

Clutches interrupt or limited the transmissible torque. The engaging and disengaging forces on externally operated clutches are introduced via a mechanically, electrically, hydraulically or pneumatically operating mechanism. Overload, centrifugal or freewheel clutches draw their engaging energy from the transmitted output.

Rigid couplings, designed as clamp, flanged or mechanism couplings, connect machines which must not undergo any shaft misalignment. Hydrodynamic couplings, often also called fluid or Föttinger couplings, are used as starting couplings in drives with high mass moments of inertia of the driven machine. In drive technology very often flexible, positive couplings, which may be designed to be torsionally rigid, torsionally flexible or highly flexible, are used.

Torsionally rigid couplings are designed to be rigid in a peripheral direction and flexible in radial and axial directions. The angle of rotation and torque are conducted through the coupling without a phase shift.

Torsionally flexible couplings have resilient elements usually manufactured from elastomer materials. Using an elastomer material with a suitable ShoreA hardness provides the most advantageous torsional stiffness and damping for the application. Shaft misalignment causes the resilient elements to deform.

Highly flexible couplings have large-volume (elastomer) resilient elements of low stiffness. The angle of rotation and torque are conducted through the coupling with a considerable phase shift.

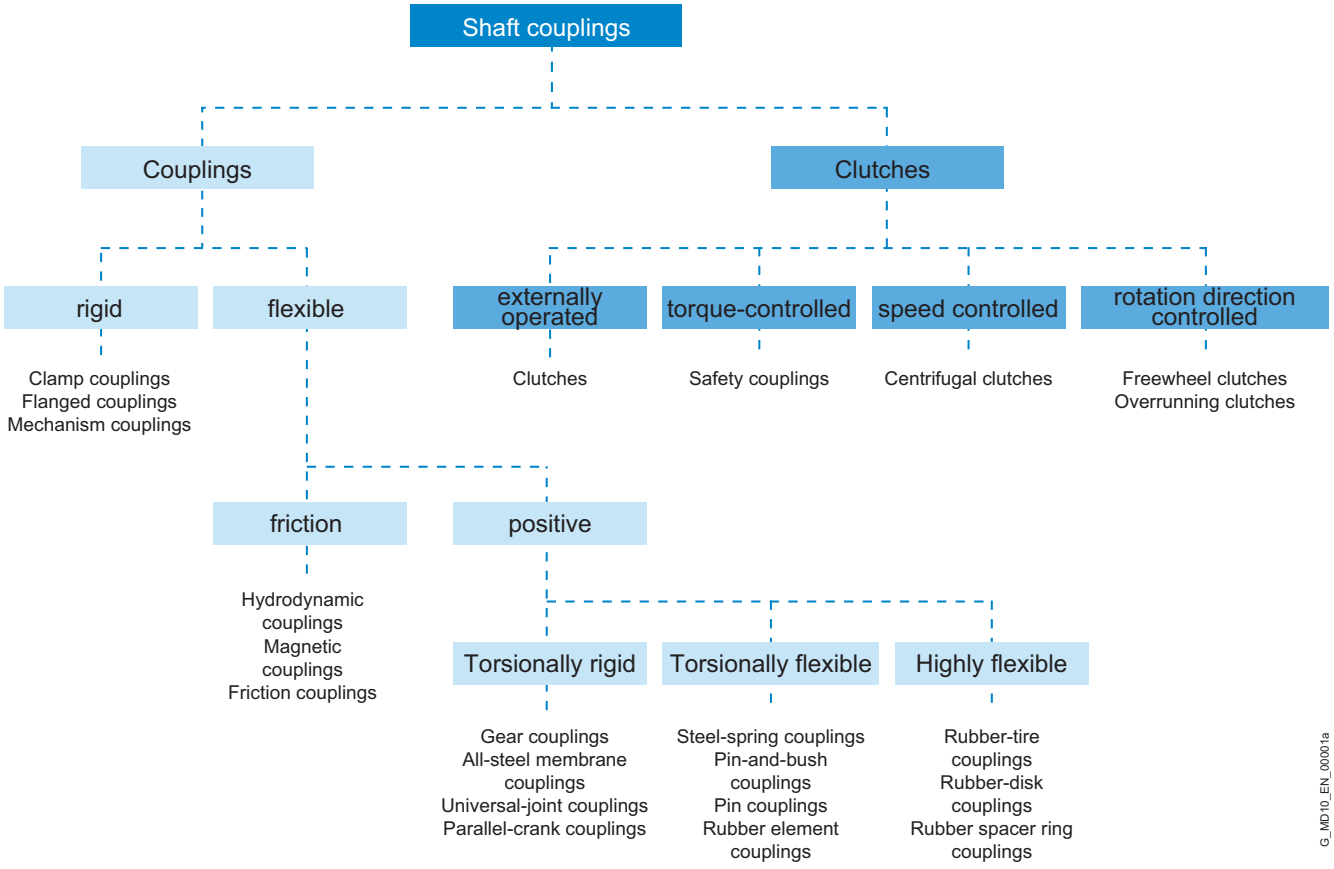
Shaft couplings
Couplings
Clutches
rigid
flexible
externally operated
torque-controlled
speed controlled
rotation direction controlled
Clamp couplings
Flanged couplings
Mechanism couplings
Clutches
Safety couplings
Centrifugal clutches
Freewheel clutches
Overrunning clutches
friction
positive
Hydrodynamic couplings
Magnetic couplings
Friction couplings
Torsionally rigid
Torsionally flexible
Highly flexible
Gear couplings
All-steel membrane couplings
Universal-joint couplings
Parallel-crank couplings
Steel-spring couplings
Pin-and-bush couplings
Pin couplings
Rubber element couplings
Rubber-tire couplings
Rubber-disk couplings
Rubber spacer ring couplings
G_MD10_EN_00001a

OUR COUPLING GROUPS AT A GLANCE

E

N-EUPEX, RUPEX and BIPEX

Flexible Couplings

Flexible Flender couplings have a wide range of possible applications. A broad standard modular system as well as specially designed application-specific couplings are available.

N-EUPEX
cam couplings
Rated torque:
12 Nm ... 93,500 Nm

RUPEX
pin-and-bush couplings
Rated torque:
120 Nm ... 1,690,000 Nm

BIPEX
cam couplings
Rated torque:
21 Nm ... 5,100 Nm

ELPEX, ELPEX-B and ELPEX-S

Highly Flexible Couplings

ELPEX® couplings are free of circumferential back-lash. Their damping capacity and low torsional stiff-ness make them especially well-suited for coupling machines with strongly non-uniform torque characteristics or large shaft misalignment.

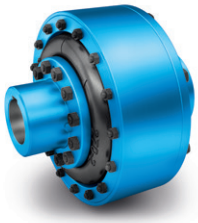

ELPEX
elastic ring couplings
Rated torque:
1,600 Nm ... 90,000 Nm

ELPEX-B
elastic tire couplings
Rated torque:
57 Nm ... 19,000 Nm

ELPEX-S
rubber disk couplings
Rated torque:
200 Nm ... 63,000 Nm

N-ZAPEX gear couplings and ARPEX all-steel couplings

Torsionally rigid couplings

For transmission of high torques, we offer both ARPEX all-steel couplings and N-ZAPEX gear couplings in a range
of versions. Their purposes of application vary according to specific requirements with respect to shaft misalignment, temperature and torque.

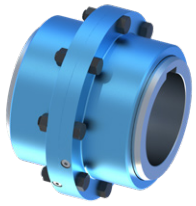

N-ZAPEX
gear couplings
Rated torque:
1,400 Nm ... 10,000,000 Nm

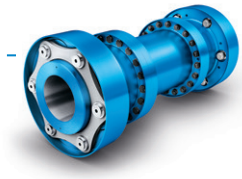

ARPEX
high performance
couplings
Rated torque:
1,100 Nm ... 936,000 Nm

N-ARPEX and ARPEX
all-steel couplings
Rated torque:
92 Nm ... 2,000,000 Nm

FLUDEX

Hydrodynamic couplings

The FLUDEX hydrodynamic fluid coupling works according to the Föttinger principle. It functions entirely free of wear.

FLUDEX
fluid couplings
Power:
1.2 kW ... 2,500 kW

Application-specific couplings

Couplings for rail vehicles must meet high demands. Due to their high degree of standardization and wide variety, they can be used in the most diverse vehicle types.

Railway coupling
Rated torque:
1,000 Nm ... 9,500 Nm

Each wind turbine coupling is designed to optimally meet the requirements of the respective wind turbine. The coupling connects the fast-running gear shaft with the generator shaft and is available for wind turbines with a capacity of up to 12 MW.

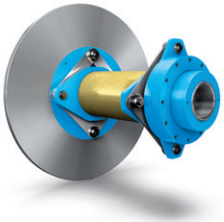

Wind turbine couplings
Rated torque:
10,000 Nm ... 60,000 Nm

AIQ DETECT

for wear detection on the N-EUPEX and RUPEX

E

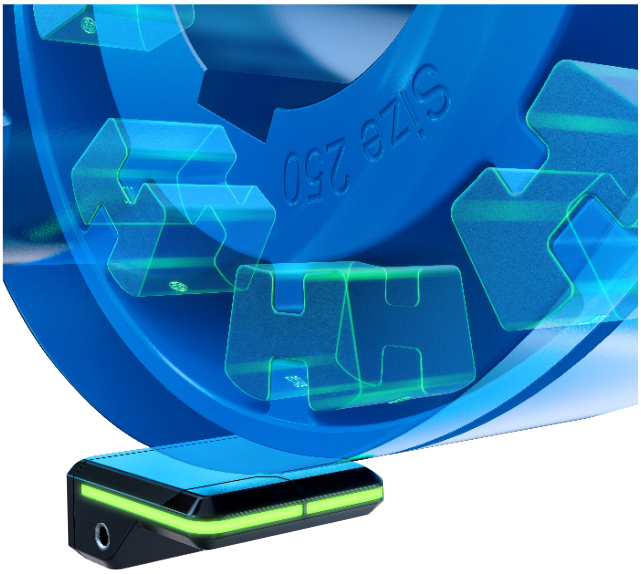

The AIQ Detect uses several Hall sensors to determine the wear on the flexible Flender couplings of the N-EUPEX and RUPEX via sensor magnets installed on the coupling side. The progressive wear of the elastomer components of the RUPEX and N-EUPEX results in a torsion angle between the coupling halves. This angle of rotation and the resulting time difference between the coupling halves make it possible to detect the degree of wear of the RUPEX and N-EUPEX flexible couplings. The speed of the coupling is also determined.

This information can be evaluated in the customer's control system via analogue and digital outputs that can be configured by the customer. The AIQ Detect also enables the wear status to be output via the built-in LED light strip on the sensor (green = the wear status is OK, yellow = the elastomer components must be replaced, red = the drive-train must be stopped). This information can also be analyzed and displayed via a Bluetooth interface with a mobile device using the AIQ app.

Benefits:

- Continuous wear monitoring
- Coupling status at a glance
- Prevents system failures = maximum operational reliability
- Supports service and maintenance personnel
- Waste reduction (replacement of elastomers only if necessary)
- No annual testing of elastomers necessary
- Flexible and easy to use

Functions:

- Detects wear on elastomers
- Speed measurement
- Remaining life forecast
- Coupling failure detection
- Configurable output signals
- Firmware upgrades via AIQ app

Coupling	Types	Size	Article No.
N-EUPEX	A, B, H	80 – 140	F2E01528467
		160 – 280	F2E01528468
		315 – 710	F2E01528469
RUPEX	RWN, RWS	105 – 1120	F2E01528472
		1250 – 2000	F2E01528473

Notes

- The AIQ Detect is used for continuous wear monitoring of Flender N-EUPEX and RUPEX couplings and can be ordered as an accessory to the coupling
- Make sure that the Flender coupling has the 'AIQ Detect-ready' status (see ordering example)

Ordering example

- N-EUPEX coupling A, size 110 with the status "AIQ Detect-ready" (Article No. addition A99)
- AIQ Detect for wear monitoring of N-EUPEX coupling A, size 110

Article No. N-EUPEX: 2LC0170-4AB99-0AA0-Z L0M+M0P+A99

Article No. AIQ Detect: F2E01528467 (according to the table)

FLEXIBLE COUPLINGS – N-EUPEX, N-EUPEX DS SERIES

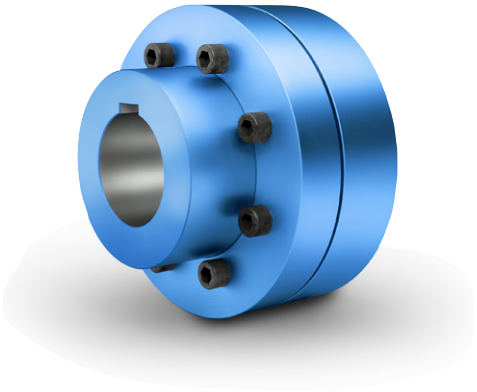

General 7/2
Benefits 7/2
Application 7/2
Design and configurations 7/3
Modular principle of N-EUPEX types 7/5
Technical specifications, N-EUPEX series 7/8
Assignment of N-EUPEX sizes to IEC standard motors 7/10
Type A for easy elastomer flexible replacement 7/11
Type B 7/12
Type ABD with brake disk 7/13
Type DK for large misalignment with simple installation and removal 7/14
Type DKS 7/15
Type H 7/16
Type D for easy elastomer flexible replacement 7/18
Type E 7/20
Type P with brake drum 7/22
Type O with brake drum 7/24
Type DBDR with brake disk 7/26
Type ERN with slip unit 7/28

N-EUPEX DS series 7/29
General 7/29
Technical specifications, N-EUPEX DS series 7/29
Type ADS for easy elastomer flexible replacement 7/30
Type BDS 7/31
Type HDS 7/32
Spare and wear parts 7/34

7

N-EUPEX
FLENDER

GENERAL

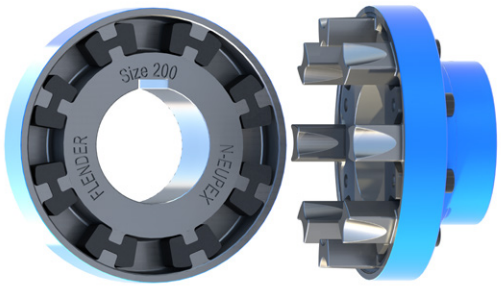

N-EUPEX as overload-holding, fail-safe series

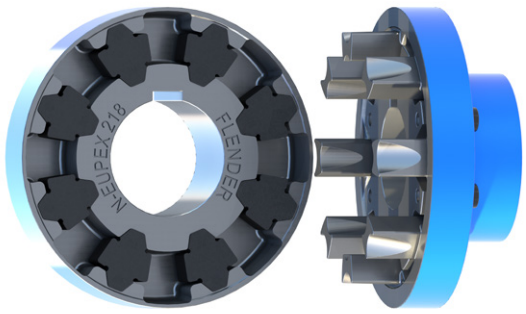

N-EUPEX DS as overload-shedding, non-fail-safe series

N-EUPEX and N-EUPEX DS pin couplings connect machines. They compensate for shaft misalignment, generating only low restorative forces.
The torque is conducted through elastomer flexibles, so the coupling has typically flexible rubber properties.

N-EUPEX couplings are overload-holding. By contrast, the N-EUPEX DS series is designed so that overload or advanced wear causes irreparable damage to the elastomer flexibles. The metal parts of N-EUPEX DS couplings can then rotate freely against one another without contact.

Coupling suitable for use in potentially explosive atmospheres.
Complies with the current ATEX Directive for:

II 2G Ex h IIC T6 ... T4 Gb X

II 2D Ex h IIIC T85 °C ... 110 °C Db X

I M2 Ex h Mb X

Benefits

N-EUPEX couplings are designed on the modular principle and have a very simple construction. N-EUPEX types are made up of subassemblies to suit requirements. The couplings are assembled by simply fitting the coupling halves together. Wear is restricted to the elastomer flexibles, which must be replaced at the end of their service life.

Depending on type, the elastomer flexibles can be changed without moving the coupled machines.
The coupling parts are readily available from stock and are mostly finish-machined, i.e. with finished bore, keyway, set screw and balancing.

Application

The N-EUPEX coupling is available as a catalog standard in 23 sizes with a rated torque of between 28 Nm and 71000 Nm. The coupling is suitable for ambient temperatures of between -50 °C and +80 °C. By using alternative elastomer flexibles, the permissible ambient temperature range can be extended to between -60 °C and +100 °C. Frequently, the coupling is used to connect the motor to the gear unit input shaft. The coupling is suitable especially for drives with uniform to average dynamic loads.

Examples of applications are pump drives, ventilator drives or crane running gear. Furthermore, N-EUPEX couplings can be used as add-on couplings, particularly on FLUDEX fluid couplings or ARPEX AKR safety couplings. In the case of drives with a diesel engine, N-EUPEX couplings are suitable for driven machines with a low mass moment of inertia. In the case of diesel engine drives, the actual dynamic coupling load should be checked by measurement or torsional vibration calculations.

Design and configurations

N-EUPEX and N-EUPEX DS couplings consist of two coupling halves mounted on the machine shafts. The coupling parts are connected positively by means of elastomer flexibles. On the two-part variant, the elastomer flexibles can be changed only if one of the coupled machines is moved.

On the three-part variants, the bolted cam ring can be released and moved to enable the flexible to be changed without moving the coupled machines.

Elastomer flexible of the N-EUPEX series

The flexibles of the N-EUPEX coupling are subjected to compression. This results in progressive torsion spring characteristics. If the flexibles are irreparably damaged, the hub parts come into contact with metal. This causes the torque to continue to be transmitted in "emergency mode" for a short period of time.

Elastomer flexible of the N-EUPEX DS series

The flexibles of the N-EUPEX DS series are subjected to compression and bending forces. A linear torsion spring characteristic curve is characteristic in this regard. If the flexibles are irreparably damaged, the metal parts turn against one another without contact, and the power transmission is separated. Fitting new flexibles will make the coupling once more usable. The capacity of the N-EUPEX DS series to shed overloads is especially in demand for highly sensitive machines.

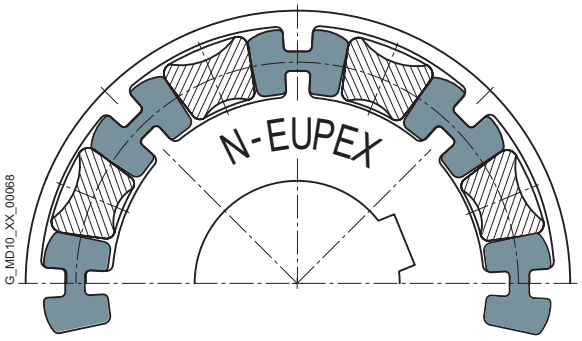

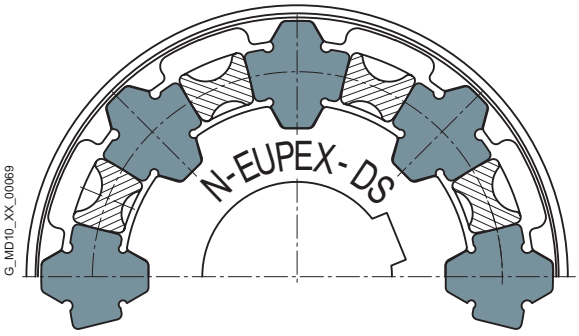

GENERAL

Materials

All coupling parts such as cam parts, pocket parts, spacers, hub parts and mounting parts are manufactured from high grade cast iron with lamellar or spheroidal graphite, or from steel. The sleeve pipes of the type DK spacers are made from aluminum.

Flexible materials

Material/description	Hardness	Marking	Ambient temperature
N-EUPEX series			
NBR standard type	**80 ShoreA**	**Flexible black with blue stripe**	**-50 °C ... +80 °C**
NBR electrically insulating	80 ShoreA	Flexible green	-30 °C ... +80 °C
NBR soft (size 225 to 710)	65 ShoreA	Flexible black with green stripe	-50 °C ... +80 °C
HP (TPU) (size 80 to 280)	97 ShoreA	Flexible blue	-50 °C ... +80 °C
HP (NBR) (size 315 to 710)	90 ShoreA	Flexible black, fabric reinforced	-50 °C ... +80 °C
HP (NBR) (size 58 to 68)	90 ShoreA	Flexible black with magenta stripe	-50 °C ... +80 °C
NBR normal low-backlash (size 58 to 200)	80 ShoreA	Flexible black with yellow stripe	-50 °C ... +80 °C
NBR soft low-backlash (size 58 to 200)	65 ShoreA	Flexible black with white stripe	-50 °C ... +80 °C
NR for low temperature	80 ShoreA	Flexible black with orange stripe	-60 °C ... +50 °C
HNBR high temperature	80 ShoreA	Flexible black with red stripe	-10 °C ... +100 °C
Type N-EUPEX DK/DKS			
HP (TPU) (size 80 to 280)	97 ShoreA	Flexible blue	-50 °C ... +80 °C
HP (NBR) (size 68)	90 ShoreA	Flexible black with magenta stripe	-50 °C ... +80 °C
N-EUPEX DS series			
NBR hard	**90 ShoreA**	**Flexible black**	**-30 °C ... +80 °C**

The technical data do not include the flexible variants NBR low-backlash, HNBR high temperature and NR low temperature. Technical data, prices and article numbers can be found at **www.flender.com**

Standard types of N-EUPEX and N-EUPEX DS pin coupling

Type	Description
A	Fail-safe, 3-part
B	Fail-safe, 2-part
D	Fail-safe, 3-part, flange variant
E	Fail-safe, 2-part, flange variant
DK	Fail-safe, double-cardanic, with spacer
DKS	Fail-safe, double-cardanic, short length
H	Fail-safe, with adapter
P	Fail-safe, 3-part, with brake drum
O	Fail-safe, 2-part, with brake drum
DBDR	Fail-safe, 3-part, with brake disk, brake disk radially dismountable
ABD	Fail-safe, 3-part, with brake disk
ERN	Fail-safe, 2-part, with slip unit
ADS	Non-fail-safe, 3-part
BDS	Non-fail-safe, 2-part
HDS	Non-fail-safe, with adapter

Special types of N-EUPEX pin coupling on request

Type	Description
AT	Fail-safe, 3-part, with Taper clamping bush
BT	Fail-safe, 2-part, with Taper clamping bush
F	Fail-safe, 3-part, with intermediate shaft
G	Fail-safe, 2-part, with intermediate shaft
K	Fail-safe, 3-part, with brake drum to customer's requirement
L	Fail-safe, 2-part, with brake drum to customer's requirement
M	Fail-safe, 2-part, with flange dimensions to SAE J620d
DBD	Fail-safe, 3-part, with brake disk
EBD	Fail-safe, 2-part, with brake disk

Further application-related coupling types are available. Dimension sheets for and information on these are available on request.

Modular principle of N-EUPEX types

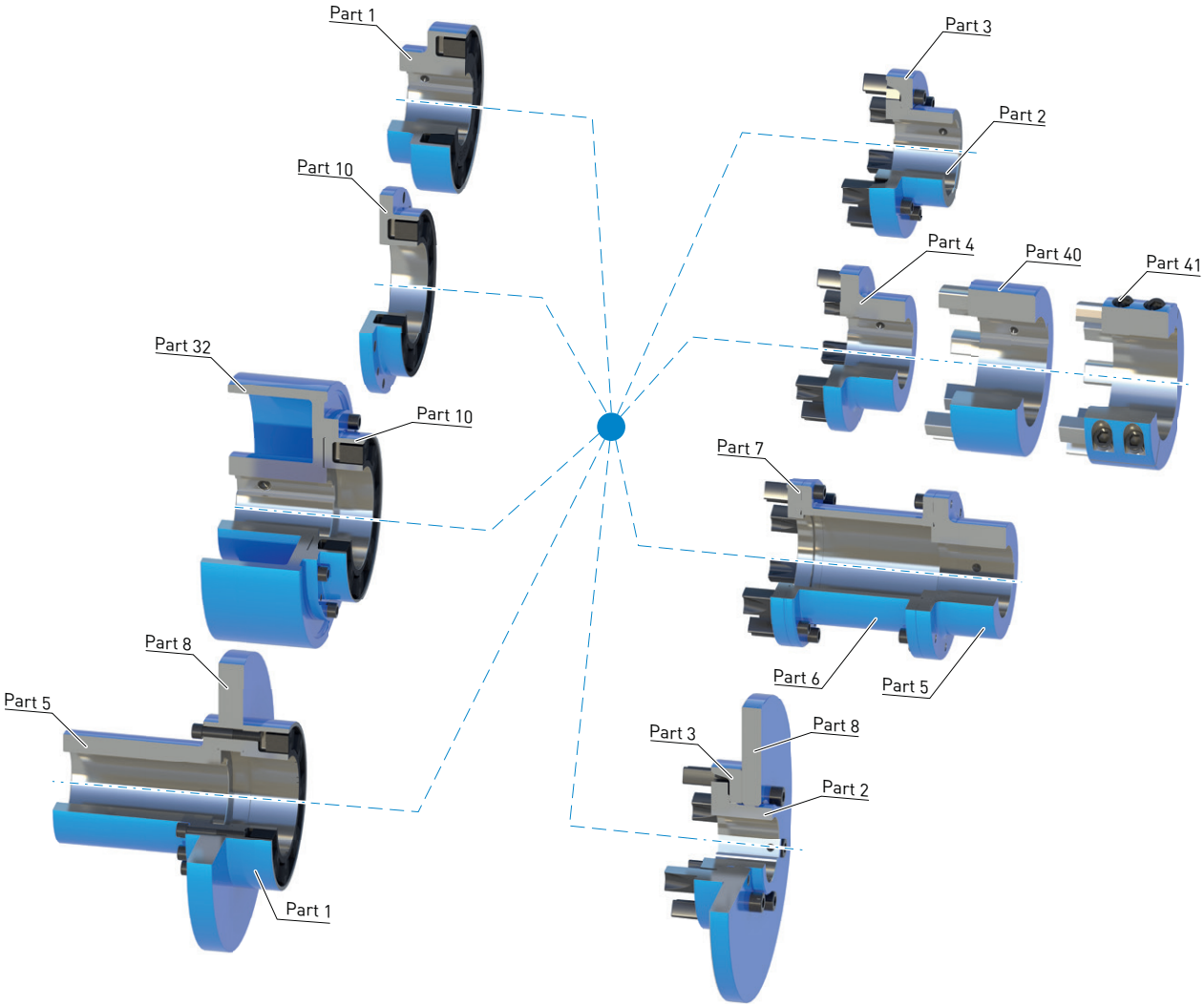

N-EUPEX DK/DKS

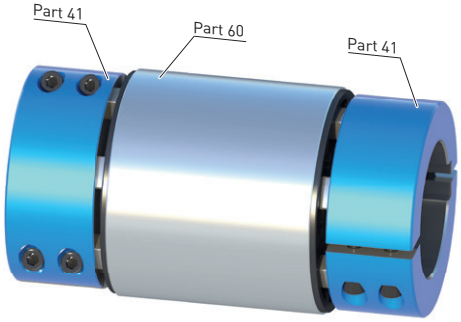

Type DK

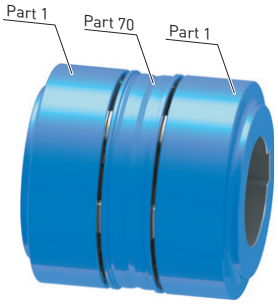

Type DKS

In the case of larger radial misalignment, double-cardanic N-EUPEX couplings can be supplied in addition to the modular system. The spacer (part 60 resp. 70) is centered with the help of the N-EUPEX elastomer elements. Any radial misalignment that emerges between the shaft ends will accordingly be equalized through a corresponding tilt angle in the elastomer joints with this two-joint versions. In the DK version, the separated hubs (part 41) made from steel facilitate simple installation. The DKS version is characterized by a reduced shaft distance.

GENERAL

Types N-EUPEX

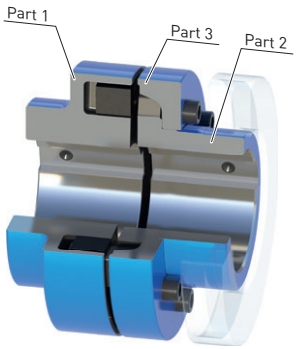

Types A and ADS

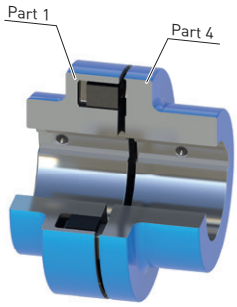

Types B and BDS

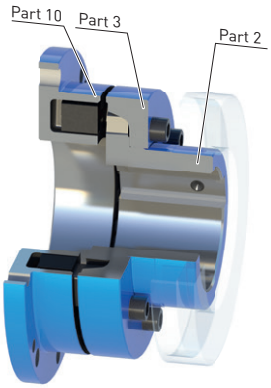

Type D

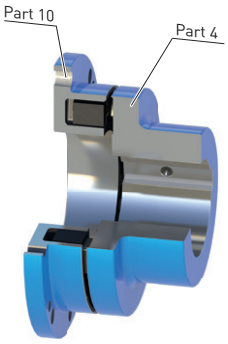

Type E

Types N-EUPEX with adapter

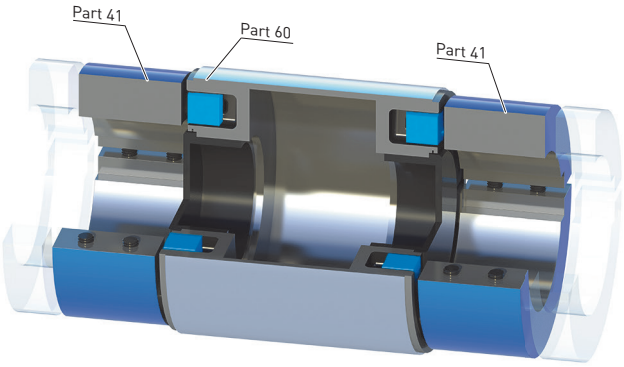

Type DK

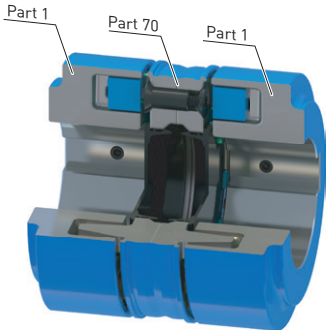

Type DKS

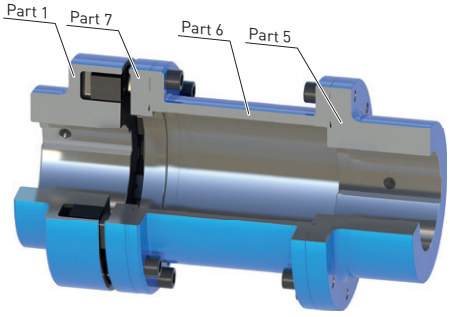

Types H and HDS

Type N-EUPEX with brake disk/brake drum

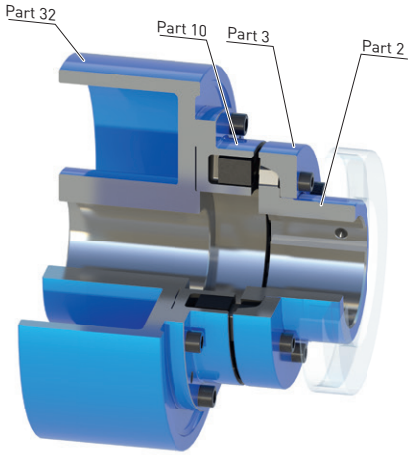

Type P

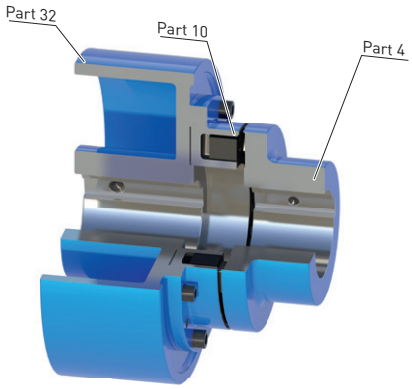

Type O

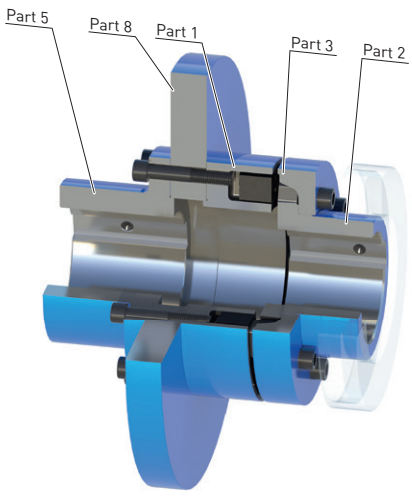

Type DBDR

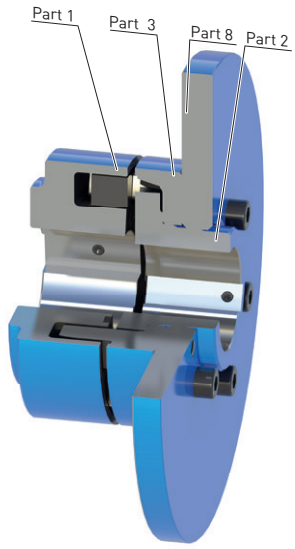

Type ABD

Type N-EUPEX with torque control

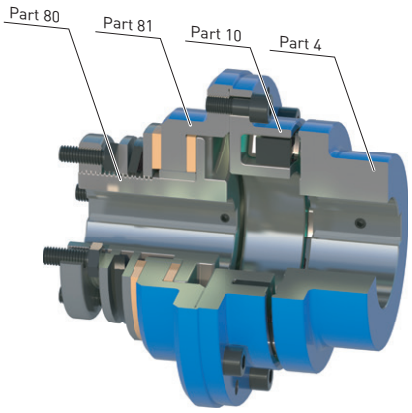

Type ERN

Note

- Further application-specific coupling types are available. Dimension sheets for and information on these are available on request.

GENERAL

Technical specifications, N-EUPEX series

Power ratings of the N-EUPEX series (single-joint coupling)

Size	Rated torque for flexible type			Maximum torque		Torsional stiffness at 50 % capacity utilization for flexible type			Permitted shaft misalignment at speed [1] n = 1500 rpm	
	65 ShoreA T_{KN} Nm	80 ShoreA T_{KN} Nm	HP [2] T_{KN} Nm	65 ShoreA T_{Kmax} Nm	80 ShoreA / HP T_{Kmax} Nm	65 ShoreA $C_{Tdyn\ 50\ \%}$ kNm/rad	80 ShoreA $C_{Tdyn\ 50\ \%}$ kNm/rad	HP $C_{Tdyn\ 50\ \%}$ kNm/rad	Radial ΔK_r mm	Angle ΔK_w °
58	12	**28**	34	36	**85**	0.22	**0.75**	1,51	0.2	0.15
68	23	**48**	58	69	**145**	0.42	**1.26**	2,79	0.2	0.15
80	40	**85**	120	120	**300**	1.13	**3.21**	14,2	0.2	0.12
95	69	**140**	200	207	**500**	1.77	**5.32**	23,1	0.2	0.12
110	110	**225**	325	330	**812**	2.70	**8.15**	36,1	0.2	0.10
125	165	**345**	490	495	**1225**	4.0	**12.3**	53,6	0.25	0.10
140	250	**500**	700	750	**1750**	6.0	**18**	77,8	0.25	0.10
160	385	**840**	1200	1150	**3000**	12.2	**39.4**	162	0.3	0.10
180	600	**1250**	1750	1800	**4375**	20.6	**63.6**	270	0.3	0.10
200	935	**1950**	2650	2800	**6625**	34.2	**106.8**	426	0.3	0.09
225	1380	**2300**	3400	4150	**8500**	52	**131**	619	0.35	0.09
250	1930	**3900**	5500	5800	**13750**	73	**221**	927	0.35	0.08
280	2700	**5500**	7400	8100	**18500**	103	**313**	1261	0.4	0.08
315	3850	**7100**	9350	11550	**23375**	186	**472**	1130	0.4	0.08
350	5335	**10800**	13000	16000	**32500**	255	**708**	1450	0.5	0.08
400	7150	**14000**	18000	21450	**45000**	343	**997**	2250	0.5	0.08
440	9350	**19000**	25000	28050	**62500**	427	**1280**	3200	0.6	0.08
480	11550	**25100**	33000	34650	**82500**	550	**1781**	4100	0.6	0.07
520	14630	**32400**	42000	43890	**105000**	650	**2124**	4800	0.65	0.07
560	20130	**39000**	50600	60390	**126500**	1095	**3119**	7600	0.65	0.07
610	26400	**49000**	63800	79200	**159500**	1422	**3873**	9400	0.75	0.07
660	33990	**63000**	79000	101970	**197500**	1799	**4834**	11300	0.8	0.07
710	42900	**71000**	93500	128700	**233750**	2339	**5608**	13400	0.9	0.07

For coupling fatigue torque:
$T_{KW} = 0{,}15 \cdot T_{KN}$, where $T_N > T_W$ must be adhered to.

N-EUPEX shaft distance S and radial misalignment ΔK_r

N-EUPEX (single-joint coupling)
Radial misalignment ΔK_r and angular misalignment ΔK_w as well as changes in gap dimension are equalized in a elastomer joint. Values for ΔS can be found in the respective type selection tables.

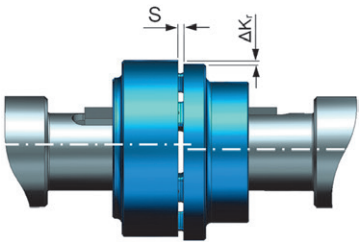

N-EUPEX DK/DKS (two-joint coupling)
Radial misalignment ΔK_r and angular misalignment ΔK_w as well as changes in gap dimension are equalized in two elastomer joints. Values for ΔS can be found in the corresponding type selection tables.

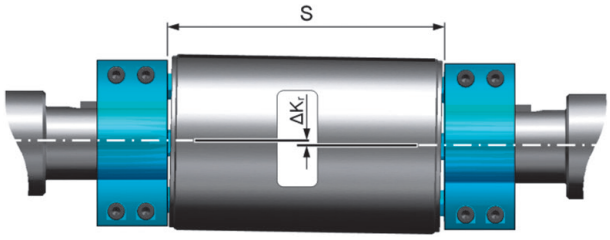

[1] The maximum speed for the respective type must be noted. For additional information on the allowable shaft misalignment, please refer to the operating instructions.

[2] For sizes 80 to 280, in case of higher temperatures the temperature factor T according to the table on **page E/20** in the Introduction has to be considered.

Performance data for type N-EUPEX DK (two-joint coupling)

Size	Rated torque	Maximum torque	Torsional stiffness at 50 % capacity utilization for flexible type	Permitted shaft misalignment [1] at n = 1500 rpm Radial Type DK					Type DKS	Angle [2]
	HP T_{KN} Nm	HP T_{Kmax} Nm	HP $C_{Tdyn\ 50\ \%}$ kNm/rad	S=100 mm $\Delta K_{r\ 100}$ mm	S=140 mm $\Delta K_{r\ 140}$ mm	S=180 mm $\Delta K_{r\ 180}$ mm	S=200 mm $\Delta K_{r\ 200}$ mm	S=250 mm $\Delta K_{r\ 250}$ mm	ΔK_r mm	ΔK_w °
68	48	120	1.18	**1.2**	–	–	–	–	–	0.15
80	85	212	5.6	**1.2**	1.7	–	–	–	0.5	0.12
95	140	350	9	**1.1**	1.6	–	–	–	0.5	0.12
110	225	562	14	**1.1**	1.5	2.1	–	–	0.6	0.10
125	345	862	21	1.0	**1.5**	2.0	2.3	–	0.6	0.10
140	500	1250	31	1.0	**1.4**	1.8	2.1	2.7	0.7	0.10
160	840	2100	63	–	**1.3**	1.8	2.1	2.7	0.7	0.10
180	1250	3125	107	–	1.3	**1.8**	2.0	2.6	0.7	0.10
200	1950	4875	170	–	1.2	**1.7**	2.0	2.6	0.8	0.09
225	2300	5750	240	–	–	**1.7**	1.9	2.6	0.9	0.09
250	3900	9750	370	–	–	–	–	–	1.1	0.08
280	5500	13750	525	–	–	–	–	–	1.1	0.08

For coupling fatigue torque:
$T_{KW} = 0{,}15 \cdot T_{KN}$, where $T_N > T_W$ must be adhered to.

Torsional stiffness and damping (single-joint or two-joint coupling)

The values stated in the above table apply to a capacity utilization of 50 %, an excitation amplitude of 10 % T_{KN} with frequency 10 Hz and an ambient temperature of 20 °C. The dynamic torsional stiffness is load-dependent and increases in proportion to capacity utilization. The following table shows the correction factors for different rated loads.

$C_{Tdyn} = C_{Tdyn\ 50\ \%} \cdot FKC$

	Load T_N / T_{KN}						
	20 %	40 %	50 %	60 %	70 %	80 %	100 %
Correction factor FKC							
65/80 ShoreA HP (size 58–68, 315–710)	0,50	0,82	1,00	1,20	1,40	1,63	2,10
HP (size 80 – 280)	0,55	0,85	1,00	1,14	1,29	1,42	1,69

The damping coefficient is Ψ = 1.4 for the 65/80 ShoreA packages and Ψ = 1.2 for the HP package

Furthermore, torsional stiffness and damping depend on the ambient temperature, on the frequency and on the amplitude of the torsional vibration excitation. More precise torsional stiffness and damping parameters on request.
Due to the manufacturing process and ageing of the elastomers, the tolerance for the dynamic stiffness is ±20 %.

Permitted shaft misalignment (single-joint or two-joint coupling)

The permitted shaft misalignment depends on the operating speed. As the speed increases, lower shaft misalignment values are permitted. The correction factors for different speeds are specified in the following table.
The maximum speed for the respective coupling size must be noted!

$\Delta K_{perm} = \Delta K_{1500} \cdot FKV$

	Speed in rpm			
	500	1000	1500	3000
Correction factor FKV	1.7	1.2	1.0	0.7

For fitting, the maximum gap dimension of
S max. = S + ΔS and the minimum gap dimension of
S min. = S – ΔS are permitted.

Shaft misalignments ΔK_r and ΔK_w may occur simultaneously.

[1] The maximum speed for the respective type must be noted. For additional information on the allowable shaft misalignment, please refer to the operating instructions.

[2] The angular misalignment ΔK_w refers to the maximum additional tilting of the shaft axes.

GENERAL

Assignment of N-EUPEX sizes to IEC standard motors (selected operating factor = 1.25) [1]

Three-phase motor Size	Output at ≈ 3000 rpm		Output at ≈ 1500 rpm		Output at ≈ 1000 rpm		Output at ≈ 750 rpm		DE (ASI) shaft end D x E acc. to IEC	
	P_M kW	N-EUPEX size	P_M kW	N-EUPEX size	P_M kW	N-EUPEX size	P_M kW	N-EUPEX size	D mm	E mm
56	0.09	**58**	0.06	**58**					9	20
56	0.12	**58**	0.09	**58**					9	20
63	0.18	**58**	0.12	**58**					11	23
63	0.25	**58**	0.18	**58**					11	23
71	0.37	**58**	0.25	**58**					14	30
71	0.55	**58**	0.37	**58**					14	30
80	0.75	**58**	0.55	**58**	0.37	**58**			19	40
80	1.1	**58**	0.75	**58**	0.55	**58**			19	40
90 S	1.5	**58**	1.1	**58**	0.75	**58**			24	50
90 L	2.2	**58**	1.5	**58**	1.1	**58**			24	50
100 L	3	**68**	2.2	**68**	1.5	**68**	0.75	**68**	28	60
100 L			3	**68**			1.1	**68**	28	60
112 M	4	**68**	4	**68**	2.2	**68**	1.5	**68**	28	60
132 S	5.5	**80**	5.5	**80**	3	**80**	2.2	**80**	38	80
132 S	7.5	**80**							38	80
132 M			7.5	**80**	4	**80**	3	**80**	38	80
132 M					5.5	**80**			38	80
160 M	11	**80**	11	**95**	7.5	**95**	4	**80**	42	110
160 M	15	**80**					5.5	**95**	42	110
160 L	18.5	**80**	15	**95**	11	**95**	7.5	**95**	42	110
180 M	22	**95**	18.5	**110**					48	110
180 L			22	**110**	15	**110**	11	**110**	48	110
200 L	30	**110**	30	**125**	18.5	**110**	15	**125**	55	110
200 L	37	**110**			22	**125**			55	110
225 S									55	110
225 S			37	**125**			18.5	**125**	60	140
225 M	45	**110**							55	110
225 M			45	**140**	30	**140**	22	**140**	60	140
250 M	55	**125**							60	140
250 M			55	**140**	37	**140**	30	**140**	65	140
280 S	75	**140**							65	140
280 S			75	**180**	45	**180**	37	**180**	75	140
280 M	90	**140**							65	140
280 M			90	**180**	55	**180**	45	**180**	75	140
315 S	110	**140**							65	140
315 S			110	**180**	75	**180**	55	**180**	80	170
315 M	132	**160**							65	140
315 M			132	**180**	90	**180**	75	**180**	80	170
315 L	160	**160**							65	140
315 L	200	**160**							65	140
315 L			160	**200**	110	**200**	90	**200**	80	170
315 L			200	**200**	132	**200**	110	**200**	80	170
315 L					160	**200**	132	**225**	85	170
315	250	**180**							65	140
315	315	**200**							65	140
315			250	**225**	200	**250**			85	170
355	355	**200**							75	140
355	400	**200**							75	140
355	500	**225**							75	140

[1] Outputs P_M of IEC motors and assigned N-EUPEX couplings (80 ShoreA)

TYPE A

for easy elastomer flexible replacement

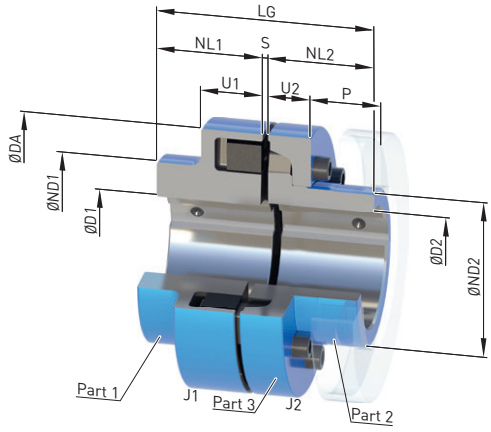

Size	Rated torque flexible type 80 ShoreA T_{KN}	Speed n_{Kmax}	Dimensions in mm Bore with keyway to DIN 6885-1 D1		D2		DA	ND1	ND2	NL1/ NL2	S	ΔS	U1	U2	P	LG	Mass moment of inertia J_1/J_2	↗ Article no. [1]	Weight m
	Nm	rpm	min.	max.	min.	max.						+/–					kgm²		kg
110	**225**	6300	–	**55**	–	**45**	110	86	60.5	40	3	1.0	34	20	33	83	0.002	**2LC0170-4AB**	2.7
125	**345**	6100	–	**60**	–	**55**	125	100	73.5	50	3	1.0	36	23	38	103	0.004	**2LC0170-5AB**	4.2
140	**500**	5800	–	**65**	–	**60**	140	100	80.5	55	3	1.0	34	28	43	113	0.007	**2LC0170-6AB**	5.6
160	**840**	5100	–	**70**	–	**70**	160	108	93.5	60	4	2.0	39	28	47	124	0.013	**2LC0170-7AB**	7.8
180	**1250**	4500	–	**80**	–	**80**	180	125	106	70	4	2.0	42	30	50	144	0.023	**2LC0170-8AB**	11
200	**1950**	4000	–	**85**	–	**90**	200	140	119	80	4	2.0	47	32	53	164	0.04	**2LC0171-0AB**	16
225	**2300**	3600	–	**90**	–	**100**	225	150	135	90	4	2.0	52	38	61	184	0.07	**2LC0171-1AB**	23
250	**3900**	3300	46	**100**	–	**115**	250	165	153	100	5.5	2.5	60	42	69	205.5	0.13	**2LC0171-2AB**	32
280	**5500**	3000	49	**110**	54	**125**	280	180	168	110	5.5	2.5	65	42	73	225.5	0.20	**2LC0171-3AB**	42
315	**7100**	2600	49	**120**	45	**145**	315	200	196	125	5.5	2.5	70	47	78	255.5	0.37	**2LC0171-4AB**	61
350	**10800**	2400	61	**140**	60	**165**	350	230	226	140	5.5	2.5	74	51	83	285.5	0.64	**2LC0171-5AB**	85
400	**14000**	2000	66	**150**	65	**180**	400	250	246	160	5.5	2.5	78	56	88	325.5	1.1	**2LC0171-6AB**	119
440	**19000**	1900	80	**160**	80	**190**	440	265	261	180	7.5	2.5	86	64	99	367.5	1.7	**2LC0171-7AB**	156
480	**25100**	1800	90	**180**	90	**215**	480	300	296	190	7.5	2.5	90	65	104	387.5	2.7	**2LC0171-8AB**	199
520	**32400**	1500	100	**190**	100	**225**	520	315	310	210	7.5	2.5	102	68	115	427.5	3.8	**2LC0172-0AB**	251
560	**39000**	1500	120	**200**	120	**230**	560	320	316	220	9	3.0	115	80	125	449	5.3	**2LC0172-1AB**	303
610	**49000**	1300	130	**220**	130	**250**	610	352	348	240	9	3.0	121	88	135	489	8.2	**2LC0172-2AB**	393
660	**63000**	1200	140	**240**	140	**275**	660	384	380	260	9	3.0	132	96	145	529	12.3	**2LC0172-3AB**	501
710	**71000**	1100	140	**260**	140	**300**	710	416	412	290	9	3.0	138	102	155	589	17.4	**2LC0172-4AB**	623

Configurable variants [1]

- ØD1 Without finished bore
  With finished bore
- ØD2 Without finished bore
  With finished bore

Notes

- Weights and mass moments of inertia apply to maximum bores.

Ordering example

- N-EUPEX A coupling, size 200
- Part 1: Bore D1 65H7 mm, keyway to DIN 6885-1 and set screw
- Part 2: Bore D2 50H7 mm, keyway to DIN 6885-1 and set screw

Article no.: 2LC0171-0AB99-0AA0 L1F+M1C

[1] To identify complete item numbers specifying the available finish boring options and – if necessary – further order options, please use our configurators on **flender.com**.

↗ For online configuration on **flender.com**, click on the item no.

TYPE B

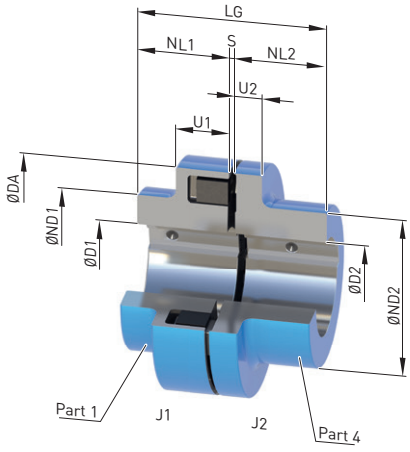

Size	Rated torque flexible type 80 ShoreA	Speed	Dimensions in mm Bore with keyway to DIN 6885-1														Mass moment of inertia	↗ Article no. [1]	Weight
	T_{KN}	n_{Kmax}	D1		D2		Part 40 [2]	DA	ND1	ND2	NL1/ NL2	S	ΔS	U1	U2	LG	J_1/J_2		m
	Nm	rpm	min.	max.	min.	max.	max.						+/–				kgm²		kg
58	**28**	9000	–	**22**	–	**25**	32	58	58	40	20	3	1.0	20	8	43	0.0001	**2LC0170-0AA**	0.4
68	**48**	8400	–	**28**	–	**30**	40	68	68	50	20	3	1.0	20	8	43	0.0002	**2LC0170-1AA**	0.6
80	**85**	7200	–	**38**	–	**42**	48	80	80	68	30	3	1.0	30	10	63	0.0006	**2LC0170-2AA**	1.3
95	**140**	6600	–	**48**	–	**48**	60	95	76	76	35	3	1.0	30	12	73	0.0012	**2LC0170-3AA**	1.8
110	**225**	6300	–	**55**	–	**55**	70	110	86	86	40	3	1.0	34	14	83	0.0024	**2LC0170-4AA**	2.8
125	**345**	6100	–	**60**	–	**60**	82	125	100	100	50	3	1.0	36	18	103	0.005	**2LC0170-5AA**	4.7
140	**500**	5800	–	**65**	–	**65**	90	140	100	100	55	3	1.0	34	20	113	0.007	**2LC0170-6AA**	5.7
160	**840**	5100	–	**70**	–	**70**	105	160	108	108	60	4	2.0	39	20	124	0.01	**2LC0170-7AA**	7.8
180	**1250**	4500	–	**80**	–	**80**	120	180	125	125	70	4	2.0	42	20	144	0.02	**2LC0170-8AA**	12
200	**1950**	4000	–	**85**	–	**85**	130	200	140	140	80	4	2.0	47	24	164	0.04	**2LC0171-0AA**	17
225	**2300**	3600	–	**90**	–	**90**	150	225	150	150	90	4	2.0	52	18	184	0.06	**2LC0171-1AA**	23
250	**3900**	3300	46	**100**	46	**100**	170	250	165	165	100	5.5	2.5	60	18	205.5	0.11	**2LC0171-2AA**	30
280	**5500**	3000	49	**110**	54	**110**	190	280	180	180	110	5.5	2.5	65	20	225.5	0.18	**2LC0171-3AA**	41

Configurable variants [1]

- ØD1 Without finished bore
  With finished bore
- ØD2 Without finished bore
  With finished bore

Notes

- Weights and mass moments of inertia apply to maximum bores.

Ordering example

- N-EUPEX B coupling, size 95
- Part 1: Bore D1 42H7 mm, keyway to DIN 6885-1 and set screw
- Part 2: Bore D2 32H7 mm, keyway to DIN 6885-1 and set screw

Article no.: 2LC0170-3AA99-0AA0 L0X+M0T

[1] To identify complete item numbers specifying the available finish boring options and – if necessary – further order options, please use our configurators on **flender.com**.

[2] Version with part 40 (jumbo hub) available on request.

↗ For online configuration on **flender.com**, click on the item no.

TYPE ABD

with brake disk

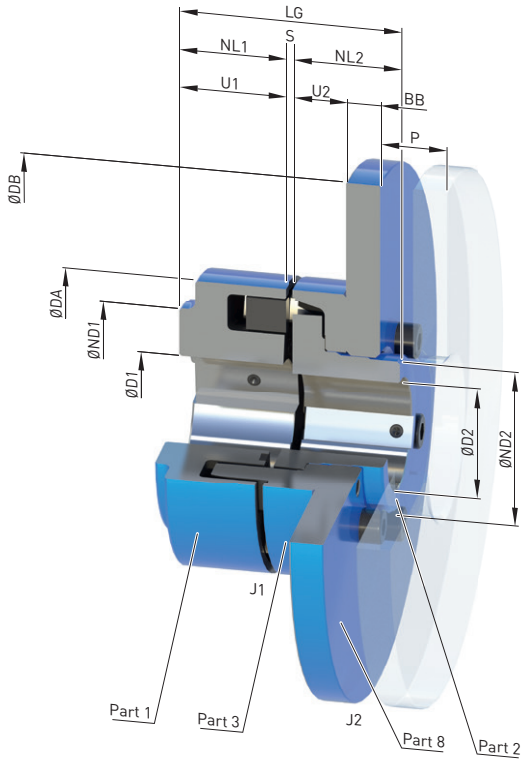

Size	Rated torque flexible type 80 ShoreA	Speed	Dimensions in mm Bore with keyway to DIN 6885-1															Mass moment of inertia		↗ Article no. [1]	Weight
	T_{KN}	n_{Kmax}	D1		D2		DA	ND1	ND2	NL1/ NL2	S	ΔS	U1	U2	P	DB [2]	BB [2]	LG	J_1	J_2		m
	Nm	rpm	min.	max.	min.	max.						+/–				min.			kgm²	kgm²		kg
140	**500**	5500	–	**65**	–	**60**	140	100	80.5	55	3	1.0	34	28	43	315	12.7	113	0.007	0.10	**2LC0170-6BB**	12.8
160	**840**	5100	–	**70**	–	**70**	160	108	93.5	60	4	2.0	39	28	47	315	12.7	124	0.013	0.11	**2LC0170-7BB**	14.8
180	**1250**	4500	–	**80**	–	**80**	180	125	106	70	4	2.0	42	30	50	355	12.7	144	0.023	0.18	**2LC0170-8BB**	20
200	**1950**	4000	–	**85**	–	**90**	200	140	119	80	4	2.0	47	32	53	400	12.7	164	0.04	0.29	**2LC0171-0BB**	27
225	**2300**	3600	–	**90**	–	**100**	225	150	135	90	4	2.0	52	38	61	450	30	184	0.07	1.0	**2LC0171-1BB**	57
250	**3900**	3300	46	**100**	–	**115**	250	165	153	100	5.5	2.5	60	42	69	500	30	205.5	0.13	1.6	**2LC0171-2BB**	73
280	**5500**	3000	49	**110**	54	**125**	280	180	168	110	5.5	2.5	65	42	73	560	30	225.5	0.20	2.5	**2LC0171-3BB**	94
315	**7100**	2600	49	**120**	45	**145**	315	200	196	125	5.5	2.5	70	47	78	630	30	255.5	0.37	4.0	**2LC0171-4BB**	126
350	**10800**	2400	61	**140**	60	**165**	350	230	226	140	5.5	2.5	74	51	83	710	30	285.5	0.64	6.5	**2LC0171-5BB**	167

Configurable variants [1]

- ØD1 Without finished bore
  With finished bore
- ØD2 Without finished bore
  With finished bore

Notes

- Weights and mass moments of inertia apply to maximum bores.

Ordering example

- N-EUPEX ABD coupling, size 200, brake disk 400 x 12.7 mm
- Part 1: Bore D1 65H7 mm, keyway to DIN 6885-1 and set screw
- Part 2: Bore D2 50H7 mm, keyway to DIN 6885-1 P9 and set screw
- Coupling micro-balanced G 6.3 at 1500 rpm in accordance with half parallel key standard

Article no.: 2LC0171-0BB99-2FA0-Z L1F+M1C+W02+Y95
Plain text to Y95: G=6.3;n=1500rpm

[1] To identify complete item numbers specifying the available finish boring options and – if necessary – further order options, please use our configurators on **flender.com**.

[3] For the available DB · BB brake disk dimensions, please refer to the product configurator on **flender.com**.

↗ For online configuration on **flender.com**, click on the item no.

TYPE DK

for large misalignment with simple installation and removal

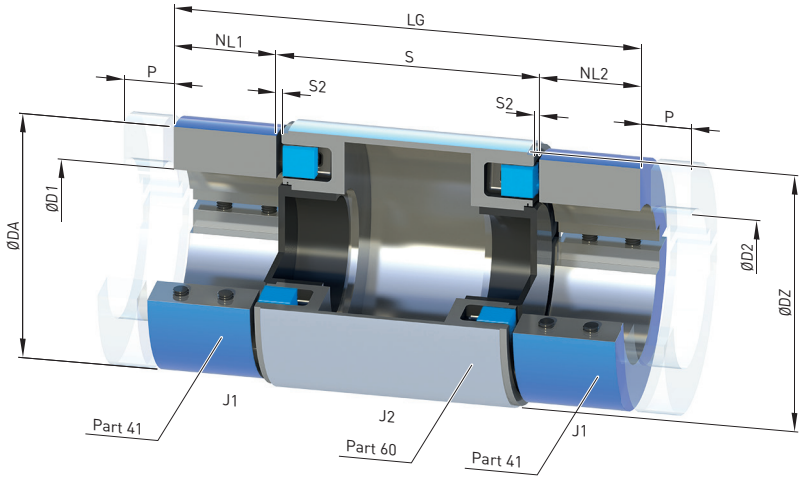

Size	Rated torque flexible type HP T_{KN} Nm	Speed n_{Kmax} rpm	Dimensions in mm Bore with keyway to DIN 6885-1 D1/D2 min.	max.	DA	DZ	NL1/ NL2	Shaft distances S [2] Preferred dimension	Available standard dimensions	ΔS +/–	S2	P	LG	Mass moment of inertia J_1 kgm²	J_2 kgm²	↗ Article no. [1]	Weight m kg
68	**48**	5500	20	**40**	68	70	30	**100**		1	2	15	160	0.0004	0.0003	**2LC0170-1BA**	1.66
80	**85**	5300	25	**48**	80	86	34	**100**	140	1	2	16	168	0.001	0.001	**2LC0170-2BA**	2.64
95	**140**	5100	25	**60**	95	100	40	**100**	140	1	2	18	180	0.002	0.002	**2LC0170-3BA**	4.0
110	**225**	4800	30	**70**	110	120	45	**100**	140, 180	1	2	21	190	0.004	0.005	**2LC0170-4BA**	6.0
125	**345**	4600	30	**82**	125	130	50	**140**	100, 180, 200	1	2.5	24	240	0.008	0.007	**2LC0170-5BA**	8.2
140	**500**	4400	40	**90**	140	150	54	**140**	100, 180, 200, 250	1	2.5	26	248	0.013	0.014	**2LC0170-6BA**	11.8
160	**840**	4000	40	**105**	160	170	70	**140**	180, 200, 250	1.5	3	30	280	0.030	0.024	**2LC0170-7BA**	18.3
180	**1250**	3700	40	**120**	180	190	75	**180**	140, 200, 250	1.5	3	32	330	0.051	0.043	**2LC0170-8BA**	24.8
200	**1950**	3400	45	**130**	200	210	80	**180**	140, 200, 250	1.5	3.5	35	340	0.085	0.069	**2LC0171-0BA**	33.7
225	**2300**	3000	45	**150**	225	240	90	**180**	200, 250	1.5	3.5	39	360	0.152	0.123	**2LC0171-1BA**	46.9

Configurable variants [1]

- ØD1 With finished bore
- ØD2 With finished bore

Notes

- The total length, weight and mass moments of inertia apply to maximal bores and shaft distances according to the preferred dimension.
- Recommended share tolerances j6 to p6
- A combination of part 60 with other cam parts as part 41 is not permitted.

Ordering example

- N-EUPEX DK coupling, size 95, S = 100 mm
- Part 41-1: Bore D1 42 mm, with keyway as per DIN 6885-1, recommended shaft tolerances j6 to p6
- Part 41-2: Bore D1 32 mm, with keyway as per DIN 6885-1, recommended shaft tolerances j6 to p6

Article no.: 2LC0170-3BA99-0AA0 L0X+M0T

[1] To identify complete item numbers specifying the available finish boring options and – if necessary – further order options, please use our configurators on **flender.com**.

[2] Special lengths on request.

↗ For online configuration on **flender.com**, click on the item no.

TYPE DKS

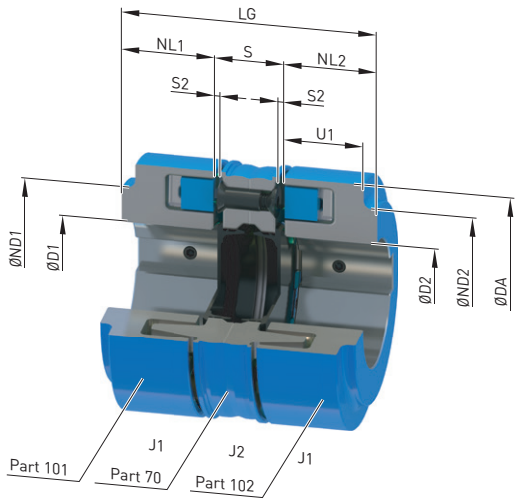

Size	Rated torque flexible type HP	Speed	Dimensions in mm										Mass moment of inertia		↗ Article no. [1]	Weight
			Bore with keyway to DIN 6885-1													
	T_{KN}	n_{Kmax}	D1/D2		DA	ND1/ ND2	NL1/ NL2	S	ΔS	S2	U1	LG	J_1	J_2		m
	Nm	rpm	min.	max.					+/–				kgm²	kgm²		kg
80	**85**	5300	–	**38**	80	80	30	26	1.0	2	30	86	0.0006	0.0007	**2LC0170-2BD**	1.8
95	**140**	5100	–	**48**	95	76	35	26	1.0	2	30	96	0.0012	0.0013	**2LC0170-3BD**	2.6
110	**225**	4800	–	**55**	110	86	40	28	1.0	2	34	108	0.0024	0.0025	**2LC0170-4BD**	4.0
125	**345**	4600	–	**60**	125	100	50	29	1.0	2.5	36	129	0.005	0.004	**2LC0170-5BD**	5.9
140	**500**	4400	–	**65**	140	100	55	35	1.0	2.5	34	145	0.006	0.008	**2LC0170-6BD**	7.6
160	**840**	4000	–	**70**	160	108	60	36	1.5	3	39	156	0.012	0.014	**2LC0170-7BD**	11
180	**1250**	3700	–	**80**	180	125	70	36	1.5	3	42	176	0.021	0.023	**2LC0170-8BD**	15
200	**1950**	3400	–	**85**	200	140	80	41	1.5	3.5	47	201	0.038	0.040	**2LC0171-0BD**	22
225	**2300**	3000	–	**90**	225	150	90	41	1.5	3.5	52	221	0.065	0.070	**2LC0171-1BD**	31
250	**3900**	2600	46	**100**	250	165	100	54	2.0	4	60	254	0.11	0.14	**2LC0171-2BD**	44
280	**5500**	2400	49	**110**	280	180	110	54	2.0	4	65	274	0.19	0.21	**2LC0171-3BD**	58

Configurable variants [1]

- ØD1 Without finished bore
  With finished bore
- ØD2 Without finished bore
  With finished bore

Notes

- The total length, weight and mass moments of inertia apply to maximal bores and shaft distances according to the preferred dimension.

Ordering example

- N-EUPEX DKS coupling, size 95
- Part 1-01: Bore D1 42H7 mm , with keyway as per DIN 6885-1 and set screw
- Part 1-02: Bore D2 32H7 mm, with keyway as per DIN 6885-1 and set screw

Article no.: 2LC0170-3BD99-0AA0 L0X+M0T

[1] To identify complete item numbers specifying the available finish boring options and – if necessary – further order options, please use our configurators on **flender.com**.

↗ For online configuration on **flender.com**, click on the item no.

TYPE H

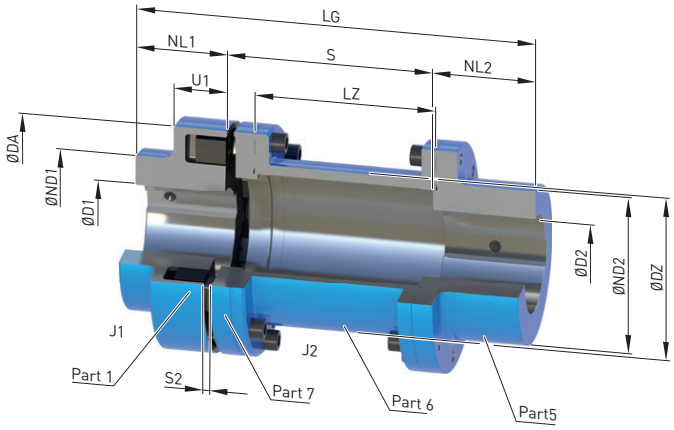

Size	Rated torque flexible type 80 ShoreA T_{KN} Nm	Speed n_{Kmax} rpm	Dimensions in mm Bore with keyway to DIN 6885-1 D1 min.	D1 max.	D2 min.	D2 max.	DA	ND1	ND2	NL1	NL2	S	S2	LZ	DZ	LG	Mass moment of inertia J_1 kgm²	J_2 kgm²	↗ Article no. [1]	Weight m kg
80	**85**	7200	–	**38**	–	**38** [2]	80	80	55	30	45	100	5	87	51	175	0.0006	0.001	**2LC0170-2AG**	2.4
												140		127		215		0.001	**2LC0170-2AG**	2.5
95	**140**	6600	–	**48**	–	**48** [2]	95	76	70	35	45	100	5	87	63	180	0.0009	0.003	**2LC0170-3AG**	3.3
												140		127		220		0.003	**2LC0170-3AG**	3.6
110	**225**	6300	–	**55**	–	**55** [2]	110	86	80	40	50	100	5	85	73	190	0.003	0.005	**2LC0170-4AG**	4.8
											50	140		125		230		0.006	**2LC0170-4AG**	5.0
											60	180		165		280		0.006	**2LC0170-4AG**	5.6
125	**345**	6100	–	**60**	–	**60** [2]	125	100	90	50	50	100	5	85	85	200	0.005	0.01	**2LC0170-5AG**	6.9
											50	140		125		240		0.01	**2LC0170-5AG**	7.4
											60	180		165		290		0.011	**2LC0170-5AG**	7.8
											70	200		185		320		0.012	**2LC0170-5AG**	8.1
											80	250		235		380		0.012	**2LC0170-5AG**	8.6
140	**500**	5800	–	**65**	–	**65** [2]	140	100	100	55	65	100	5	82	91	220	0.007	0.018	**2LC0170-6AG**	9.6
											65	140		122		260		0.019	**2LC0170-6AG**	10.1
											65	180		162		300		0.02	**2LC0170-6AG**	10.6
											65	200		182		320		0.021	**2LC0170-6AG**	10.9
											80	250		232		385		0.022	**2LC0170-6AG**	11.5

Configurable variants [1]

- ØD1 Without finished bore
  With finished bore
- ØD2 Without finished bore
  With finished bore

[1] To identify complete item numbers specifying the available finish boring options and – if necessary – further order options, please use our configurators on **flender.com**.

[3] For bore diameters greater than the following values, the feather key must be at least 3 mm behind the shaft end. Size 80 D2 > 32 mm; size 95 D2 > 42 mm; size 110 D2 > 50 mm; size 125 D2 > 59 mm; size 140 D2 > 64 mm.

↗ For online configuration on **flender.com**, click on the item no.

Size	Rated torque flexible type 80 ShoreA	Speed	Dimensions in mm														Mass moment of inertia		↗ Article no. [1]	Weight
			Bore with keyway to DIN 6885-1																	
	T_{KN}	n_{Kmax}	D1		D2		DA	ND1	ND2	NL1	NL2	S	S2	LZ	DZ	LG	J_1	J_2		m
	Nm	rpm	min.	max.	min.	max.											kgm²	kgm²		kg
											70	100		81.5		230		0.03	**2LC0170-7AG**	12.5
											70	140		121.5		270		0.032	**2LC0170-7AG**	13
160	**840**	5100	–	**70**	–	**70**	160	108	108	60	70	180	6	161.5	111	310	0.013	0.034	**2LC0170-7AG**	14
											70	200		181.5		330		0.035	**2LC0170-7AG**	14
											80	250		231.5		390		0.037	**2LC0170-7AG**	15
												140		121.5		290		0.053	**2LC0170-8AG**	18
180	**1250**	4500	–	**80**	–	**80**	180	125	125	70	80	180	6	161.5	131	330	0.023	0.057	**2LC0170-8AG**	19
												200		181.5		350		0.059	**2LC0170-8AG**	20
												250		231.5		400		0.064	**2LC0170-8AG**	21
												140		118.5		310		0.094	**2LC0171-0AG**	25
200	**1950**	4000	–	**85**	–	**90**	200	140	140	80	90	180	6	158.5	144	350	0.04	0.099	**2LC0171-0AG**	26
												200		178.5		370		0.104	**2LC0171-0AG**	27
												250		228.5		420		0.109	**2LC0171-0AG**	28
												140		118.5		330		0.157	**2LC0171-1AG**	33
225	**2300**	3600	–	**90**	–	**100**	225	150	150	90	100	180	6	158.5	169	370	0.07	0.16	**2LC0171-1AG**	34
												200		178.5		390		0.17	**2LC0171-1AG**	35
												250		228.5		440		0.18	**2LC0171-1AG**	37
												180		152.5		390		0.27	**2LC0171-2AG**	48
250	**3900**	3300	46	**100**	46	**110**	250	165	165	100	110	200	8	172.5	185	410	0.12	0.28	**2LC0171-2AG**	50
												250		222.5		460		0.3	**2LC0171-2AG**	52
280	**5500**	3000	49	**110**	51	**130**	280	180	180	110	120	250	8	222.5	215	480	0.20	0.51	**2LC0171-3AG**	67
315	**7100**	2600	49	**120**	51	**140**	315	200	200	125	140	250	8	222.5	246	515	0.35	0.85	**2LC0171-4AG**	96
350	**10800**	2400	61	**140**	51	**160**	350	230	230	140	150	250	8	220.5	272	540	0.61	1.4	**2LC0171-5AG**	120
400	**14000**	2000	66	**150**	51	**180**	400	250	250	160	180	250	8	185.5	311	590	1.1	2.8	**2LC0171-6AG**	190
440	**19000**	1900	80	**160**	51	**190**	440	265	265	180	180	250	10	182	354	610	1.7	4.0	**2LC0171-7AG**	219

Configurable variants [1]

- ØD1 Without finished bore
  With finished bore
- ØD2 Without finished bore
  With finished bore

Notes

- For dimension U1, see type A on **page 7/11**.
- During assembly, the gap dimension S2 must not exceed the permissible tolerance of +1 mm.
- Weights and mass moments of inertia apply to maximum bores.

Ordering example

- N-EUPEX H coupling, size 160, S = 200 mm
- Part 1: Bore D1 60H7 mm, keyway to DIN 6885-1 and set screw
- Part 2: Bore D2 55H7 mm, keyway to DIN 6885-1 and set screw

Article no.: 2LC0170-7AG99-0AD0 L1E+M1D

[1] To identify complete item numbers specifying the available finish boring options and – if necessary – further order options, please use our configurators on **flender.com**.

↗ For online configuration on **flender.com**, click on the item no.

TYPE D

for easy elastomer flexible replacement

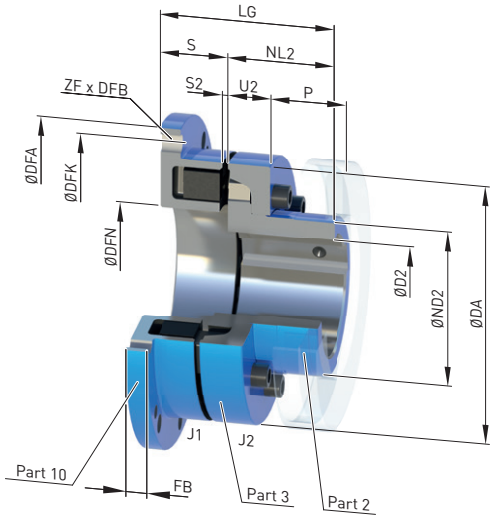

Size	Rated torque flexible type 80 ShoreA	Speed	Dimensions in mm															Mass moment of inertia		↗ Article no. [1]	Weight
			Bore with keyway to DIN 6885-1									Flange connection dimensions									
	T_{KN}	n_{Kmax}	D2		DA	ND2	NL2	S	ΔS	S2	LG	DFA	DFN	DFK	FB	ZF	DFB	J_1	J_2		m
	Nm	rpm	min.	max.					+/–			h8	H7					kgm²	kgm²		kg
110	**225**	6300	–	**45**	110	60.5	40	30	1.0	3	70	144	62	128	10	6	9 / M8	0.0033	0.002	**2LC0170-4AD1** / **2LC0170-4AD2**	2.6
125	**345**	6000	–	**55**	125	73.5	50	34	1.0	3	84	158	75	142	10	6	9 / M8	0.005	0.004	**2LC0170-5AD1** / **2LC0170-5AD2**	3.5
140	**500**	5300	–	**60**	140	80.5	55	37	1.0	3	92	180	82	160	13	6	11 / M10	0.010	0.007	**2LC0170-6AD1** / **2LC0170-6AD2**	5.4
160	**840**	4800	–	**70**	160	93.5	60	43	2.0	4	103	200	95	180	13	7	11 / M10	0.016	0.013	**2LC0170-7AD1** / **2LC0170-7AD2**	7.1
180	**1250**	4300	–	**80**	180	106	70	46	2.0	4	116	220	110	200	13	8	11 / M10	0.025	0.023	**2LC0170-8AD1** / **2LC0170-8AD2**	9.5
200	**1950**	3900	–	**90**	200	119	80	51	2.0	4	131	248	120	224	16	8	14 / M12	0.049	0.04	**2LC0171-0AD1** / **2LC0171-0AD2**	14
225	**2300**	3600	–	**100**	225	135	90	56	2.0	4	146	274	135	250	16	8	14 / M12	0.076	0.07	**2LC0171-1AD1** / **2LC0171-1AD2**	19
250	**3900**	3000	–	**115**	250	153	100	65.5	2.5	5.5	165.5	314	150	282	20	8	18 / M16	0.15	0.13	**2LC0171-2AD1** / **2LC0171-2AD2**	28
280	**5500**	3000	54	**125**	280	168	110	70.5	2.5	5.5	180.5	344	170	312	20	8	18 / M16	0.23	0.2	**2LC0171-3AD1** / **2LC0171-3AD2**	35

Configurable variants [1]

- ØD2 Without finished bore
  With finished bore

[1] To identify complete item numbers specifying the available finish boring options and – if necessary – further order options, please use our configurators on **flender.com**.

↗ For online configuration on **flender.com**, click on the item no.

Size	Rated torque flexible type 80 ShoreA	Speed	Dimensions in mm															Mass moment of inertia		↗ Article no. [1]	Weight
			Bore with keyway to DIN 6885-1									Flange connection dimensions									
	T_{KN}	n_{Kmax}	D2		DA	ND2	NL2	S	ΔS	S2	LG	DFA	DFN	DFK	FB	ZF	DFB	J_1	J_2		m
	Nm	rpm	min.	max.					+/–			h8	H7					kgm²	kgm²		kg
315	**7100**	2500	45	**145**	315	196	125	75.5	2.5	5.5	200.5	380	200	348	22	9	18 M16	0.4	0.37	**2LC0171-4AD1** **2LC0171-4AD2**	48
350	**10800**	2200	60	**165**	350	226	140	79.5	2.5	5.5	219.5	430	225	390	25	9	22 M20	0.7	0.64	**2LC0171-5AD1** **2LC0171-5AD2**	68
400	**14000**	2000	65	**180**	400	246	160	83.5	2.5	5.5	243.5	480	265	440	25	10	22 M20	1.1	1.1	**2LC0171-6AD1** **2LC0171-6AD2**	89
440	**19000**	1800	80	**190**	440	261	180	93.5	2.5	7.5	273.5	520	295	480	25	10	22 M20	1.6	1.7	**2LC0171-7AD1** **2LC0171-7AD2**	117
480	**25100**	1800	90	**215**	480	296	190	97.5	2.5	7.5	287.5	575	325	528	30	10	26 M24	2.6	2.7	**2LC0171-8AD1** **2LC0171-8AD2**	149
520	**32400**	1500	100	**225**	520	310	210	109.5	2.5	7.5	319.5	615	355	568	30	10	26 M24	3.6	3.8	**2LC0172-0AD1** **2LC0172-0AD2**	182

Configurable variants [1]

- ØD2 Without finished bore
  With finished bore

Notes

- For dimensions U2 and P, see type A on **page 7/11**.
- Weights and mass moments of inertia apply to maximum bores.

Ordering example

- N-EUPEX D coupling, size 125
- Part 10: with through bores
- Part 2: Bore D2 38H7 mm, with keyway to DIN 6885-1 and set screw

Article no.: 2LC0170-5AD19-0AA0 M0V

[1] To identify complete item numbers specifying the available finish boring options and – if necessary – further order options, please use our configurators on **flender.com**.

↗ For online configuration on **flender.com**, click on the item no.

TYPE E

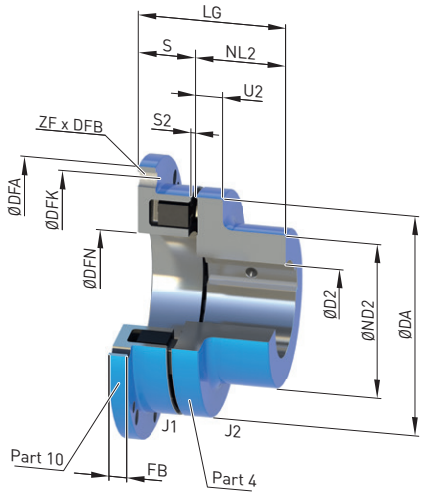

Size	Rated torque flexible type 80 ShoreA	Speed	Dimensions in mm															Mass moment of inertia		↗ Article no. [1]	Weight
			Bore with keyway to DIN 6885-1									Flange connection dimensions									
	T_{KN}	n_{Kmax}	D2		DA	ND2	NL2	S	ΔS	S2	LG	DFA	DFN	DFK	FB	ZF	DFB	J_1	J_2		m
	Nm	rpm	min.	max.					+/–			h8	H7					kgm²	kgm²		kg
68	**48**	8400	–	**30**	68	50	20	23	1.0	3	43	90	34	80	7	6	5.5 / M5	0.0004	0.0002	**2LC0170-1AC1** / **2LC0170-1AC2**	0.7
80	**85**	7200	–	**42**	80	68	30	24	1.0	3	54	106	42	94	8	6	6.6 / M6	0.0008	0.0006	**2LC0170-2AC1** / **2LC0170-2AC2**	1.2
95	**140**	6600	–	**48**	95	76	35	27	1.0	3	62	120	52	108	8	6	6.6 / M6	0.0013	0.0012	**2LC0170-3AC1** / **2LC0170-3AC2**	1.7
110	**225**	6300	–	**55**	110	86	40	30	1.0	3	70	144	62	128	10	6	9 / M8	0.0033	0.0024	**2LC0170-4AC1** / **2LC0170-4AC2**	2.6
125	**345**	6000	–	**60**	125	100	50	34	1.0	3	84	158	75	142	10	6	9 / M8	0.005	0.005	**2LC0170-5AC1** / **2LC0170-5AC2**	4.0
140	**500**	5300	–	**65**	140	100	55	37	1.0	3	92	180	82	160	13	6	11 / M10	0.010	0.007	**2LC0170-6AC1** / **2LC0170-6AC2**	5.5
160	**840**	4800	–	**70**	160	108	60	43	2.0	4	103	200	95	180	13	7	11 / M10	0.016	0.01	**2LC0170-7AC1** / **2LC0170-7AC2**	7.1

Configurable variants [1]

- ØD2 Without finished bore
  With finished bore

[1] To identify complete item numbers specifying the available finish boring options and – if necessary – further order options, please use our configurators on **flender.com**.

↗ For online configuration on **flender.com**, click on the item no.

Size	Rated torque flexible type 80 ShoreA	Speed	Dimensions in mm																Mass moment of inertia		↗ Article no. [1]	Weight
			Bore with keyway to DIN 6885-1									Flange connection dimensions										
	T_{KN}	n_{Kmax}	D2		DA	ND2	NL2	S	ΔS	S2	LG	DFA	DFN	DFK	FB	ZF	DFB		J_1	J_2		m
	Nm	rpm	min.	max.					+/–			h8	H7						kgm²	kgm²		kg
180	**1250**	4300	–	**80**	180	125	70	46	2.0	4	116	220	110	200	13	8	11 / M10		0.025	0.02	**2LC0170-8AC1** / **2LC0170-8AC2**	10
200	**1950**	3900	–	**85**	200	140	80	51	2.0	4	131	248	120	224	16	8	14 / M12		0.049	0.04	**2LC0171-0AC1** / **2LC0171-0AC2**	15
225	**2300**	3600	–	**90**	225	150	90	56	2.0	4	146	274	135	250	16	8	14 / M12		0.076	0.06	**2LC0171-1AC1** / **2LC0171-1AC2**	19
250	**3900**	3000	46	**100**	250	165	100	65.5	2.5	5.5	165.5	314	150	282	20	8	18 / M16		0.15	0.11	**2LC0171-2AC1** / **2LC0171-2AC2**	26
280	**5500**	3000	54	**110**	280	180	110	70.5	2.5	5.5	180.5	344	170	312	20	8	18 / M16		0.23	0.18	**2LC0171-3AC1** / **2LC0171-3AC2**	34

7

Configurable variants [1]

- ØD2 Without finished bore
  With finished bore

Notes

- For dimension U2, see type B on **page 7/12**.
- Weights and mass moments of inertia apply to maximum bores.

Ordering example

- N-EUPEX E coupling, size 125
- Part 10: with through bores
- Part 4: Bore D2 38H7 mm, with keyway to DIN 6885-1 and set screw

Article no.: 2LC0170-5AC19-0AA0 M0V

[1] To identify complete item numbers specifying the available finish boring options and – if necessary – further order options, please use our configurators on **flender.com**.

↗ For online configuration on **flender.com**, click on the item no.

TYPE P

with brake drum

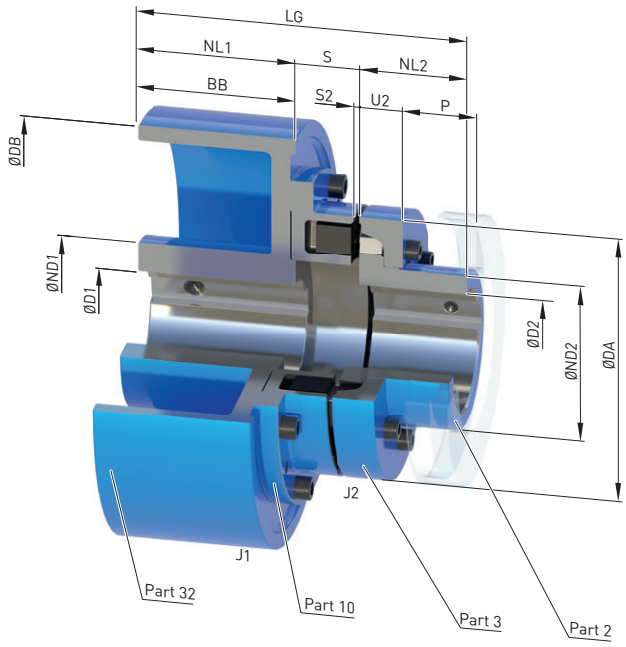

Size	Rated torque flexible type 80 ShoreA	Speed	Dimensions in mm															Mass moment of inertia		↗ Article no. [1]	Weight
			Bore with keyway to DIN 6885-1																		
	T_{KN}	n_{Kmax}	D1		D2		DA	ND1	ND2	NL1/BB	NL2	S	ΔS	S2	DB	U2	LG	J_1	J_2		m
	Nm	rpm	min.	max.	min.	max.							+/–					kgm²	kgm²		kg
125	**345**	4800	–	**55**	–	**55**	125	84	73.5	75	50	31	1.0	3	200	23	156	0.043	0.004	**2LC0170-5AF**	11
140	**500**	3800	–	**60**	–	**60**	140	128	80.5	95	55	34	1.0	3	250	28	184	0.13	0.007	**2LC0170-6AF**	21
160	**840**	3800	–	**70**	–	**70**	160	128	93.5	95	60	40	2.0	4	250	28	195	0.14	0.013	**2LC0170-7AF**	21
180	**1250**	3800	–	**80**	–	**80**	180	128	106	95	70	41	2.0	4	250	30	206	0.16	0.023	**2LC0170-8AF**	27
		3000	–	**80**				128		118		43			315		231	0.35		**2LC0170-8AF**	34
200	**1950**	3000	–	**80**	–	**90**	200	128	119	118	80	48	2.0	4	315	32	246	0.37	0.04	**2LC0171-0AF**	39
		2400	–	**90**				160		150		48			400		278	1.1		**2LC0171-0AF**	59
		1900	–	**110** [2]				175		190		48			500		318	2.8		**2LC0171-0AF**	97
225	**2300**	3000	–	**80**	–	**100**	225	128	135	118	90	51	2.0	4	315	38	259	0.39	0.07	**2LC0171-1AF**	46
		2400	–	**90**				160		150		53			400		293	1.1		**2LC0171-1AF**	64
		1900	38	**110**				175		190		53			500		333	3.1		**2LC0171-1AF**	103

Configurable variants [1]

- ØD1 Without finished bore
  With finished bore
- ØD2 Without finished bore
  With finished bore

[1] To identify complete item numbers specifying the available finish boring options and – if necessary – further order options, please use our configurators on **flender.com**.

[2] For bore diameters greater than the following values, the feather key must be at least 3 mm behind the shaft end. Size 200 D1 > 100 mm.

↗ For online configuration on **flender.com**, click on the item no.

Size	Rated torque flexible type 80 ShoreA	Speed	Dimensions in mm															Mass moment of inertia		↗ Article no. [1]	Weight
			Bore with keyway to DIN 6885-1																		
	T_{KN}	n_{Kmax}	D1		D2		DA	ND1	ND2	NL1/BB	NL2	S	ΔS	S2	DB	U2	LG	J_1	J_2		m
	Nm	rpm	min.	max.	min.	max.							+/–					kgm²	kgm²		kg
250	**3900**	2400	–	**100**	–	**115**	250	160	153	150	100	62.5	2.5	5.5	400	42	312.5	1.16	0.13	**2LC0171-2AF**	74
		1900	38	**110**				175		190		62.5			500		352.5	2.9		**2LC0171-2AF**	111
280	**5500**	2400	–	**100**	54	**125**	280	160	168	150	110	65.5	2.5	5.5	400	42	325.5	1.24	0.2	**2LC0171-3AF**	82
		1900	48	**110**				175		190		67.5			500		367.5	3.1		**2LC0171-3AF**	115
		1500	48	**110**				175		236		67.5			630		413.5	8.0		**2LC0171-3AF**	168
315	**7100**	2400	–	**100**	45	**145**	315	160	196	150	125	72.5	2.5	5.5	400	47	347.5	1.4	0.37	**2LC0171-4AF**	92
		1900	48	**110**				175		190		72.5			500		387.5	3.3		**2LC0171-4AF**	131
		1500	48	**110**				175		236		72.5			630		433.5	8.2		**2LC0171-4AF**	180
		1300	55	**120**				192		265		72.5			710		462.5	14.2		**2LC0171-4AF**	233
350	**10800**	1500	48	**110**	60	**165**	350	175	226	236	140	76.5	2.5	5.5	630	51	452.5	8.5	0.64	**2LC0171-5AF**	197
		1300	55	**120**				192		265		76.5			710		481.5	14.6		**2LC0171-5AF**	251

Configurable variants [1]

- ØD1 Without finished bore
  With finished bore
- ØD2 Without finished bore
  With finished bore

Notes

- For dimension P, see type A on **page 7/11**.
- Weights and mass moments of inertia apply to maximum bores.

Ordering example

- N-EUPEX P coupling, size 200, brake drum 315 x 118 mm
- Part 32: Bore D1 55H7 mm, keyway to DIN 6885-1 P9 and set screw
- Part 4: Bore D2 60H7 mm, keyway to DIN 6885-1 and set screw
- Coupling micro-balanced G 6.3 at 1500 rpm in accordance with half parallel key standard

Article no.: 2LC0171-0AF99-0DA0-Z L1D+M1E+W02+Y95
Plain text to Y95: G=6.3;n=1500rpm

[1] To identify complete item numbers specifying the available finish boring options and – if necessary – further order options, please use our configurators on **flender.com**.

↗ For online configuration on **flender.com**, click on the item no.

TYPE O

with brake drum

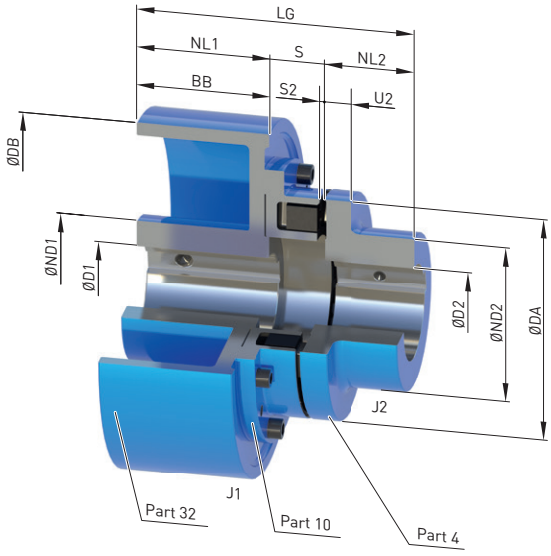

Size	Rated torque flexible type 80 ShoreA	Speed	Dimensions in mm Bore with keyway to DIN 6885-1															Mass moment of inertia		↗ Article no. [1]	Weight
	T_{KN} Nm	n_{Kmax} rpm	D1 min.	D1 max.	D2 min.	D2 max.	DA	ND1	ND2	NL1/BB	NL2	S	ΔS +/–	S2	DB	U2	LG	J_1 kgm²	J_2 kgm²		m kg
125	**345**	4800	–	**55**	–	**60**	125	84	100	75	50	31	1.0	3	200	18	156	0.043	0.005	**2LC0170-5AE**	11
140	**500**	3800	–	**60**	–	**65**	140	128	100	95	55	34	1.0	3	250	20	184	0.13	0.007	**2LC0170-6AE**	22
160	**840**	3800	–	**70**	–	**70**	160	128	108	95	60	40	2.0	4	250	20	195	0.14	0.01	**2LC0170-7AE**	24
180	**1250**	3800	–	**80**	–	**80**	180	128	125	95	70	41	2.0	4	250	20	206	0.16	0.02	**2LC0170-8AE**	28
		3000	–	**80**						118		43			315		231	0.35		**2LC0170-8AE**	35
200	**1950**	3000	–	**80**	–	**85**	200	128	140	118	80	48	2.0	4	315	24	246	0.37	0.04	**2LC0171-0AE**	40
		2400	–	**90**				160		150		48			400		278	1.10		**2LC0171-0AE**	60
		1900	–	**110** [2]				175		190		48			500		318	2.80		**2LC0171-0AE**	98

Configurable variants [1]

- ØD1 Without finished bore
  With finished bore
- ØD2 Without finished bore
  With finished bore

[1] To identify complete item numbers specifying the available finish boring options and – if necessary – further order options, please use our configurators on **flender.com**.

[2] For bore diameters greater than the following values, the feather key must be at least 3 mm behind the shaft end. Size 200 D1 > 100 mm.

↗ For online configuration on **flender.com**, click on the item no.

Size	Rated torque flexible type 80 ShoreA	Speed	Dimensions in mm															Mass moment of inertia		↗ Article no. [1]	Weight
			Bore with keyway to DIN 6885-1																		
	T_{KN}	n_{Kmax}	D1		D2		DA	ND1	ND2	NL1/BB	NL2	S	ΔS	S2	DB	U2	LG	J_1	J_2		m
	Nm	rpm	min.	max.	min.	max.							+/–					kgm²	kgm²		kg
		3000	-	**80**				128		118		51			315		259	0.39		**2LC0171-1AE**	45
225	**2300**	2400	-	**90**	–	**90**	225	160	150	150	90	53	2.0	4	400	18	293	1.10	0.06	**2LC0171-1AE**	63
		1900	38	**110**				175		190		53			500		333	3.10		**2LC0171-1AE**	102
250	**3900**	2400	-	**100**	46	**100**	250	160	165	150	100	62.5	2.5	5.5	400	18	312.5	1.16	0.11	**2LC0171-2AE**	73
		1900	38	**110**				175		190		62.5			500		352.5	2.90		**2LC0171-2AE**	108
		2400	-	**100**				160		150		65.5			400		325.5	1.24		**2LC0171-3AE**	82
280	**5500**	1900	48	**110**	54	**110**	280	175	180	190	110	67.5	2.5	5.5	500	20	367.5	3.10	0.18	**2LC0171-3AE**	115
		1500	48	**110**				175		236		67.5			630		413.5	8.0		**2LC0171-3AE**	168

7

Configurable variants [1]

- ØD1 Without finished bore
  With finished bore
- ØD2 Without finished bore
  With finished bore

Notes

- Weights and mass moments of inertia apply to maximum bores.

Ordering example

- N-EUPEX O coupling, size 200, brake drum 315 x 118 mm
- Part 32: Bore D1 55H7 mm, keyway to DIN 6885-1 P9 and set screw
- Part 4: Bore D2 60H7 mm, keyway to DIN 6885-1 and set screw
- Coupling micro-balanced G 6.3 at 1500 rpm in accordance with half parallel key standard

Article no.: 2LC0171-0AE99-0DA0-Z L1D+M1E+W02+Y95
Plain text to Y95: G=6.3;n=1500rpm

[1] To identify complete item numbers specifying the available finish boring options and – if necessary – further order options, please use our configurators on **flender.com**.

↗ For online configuration on **flender.com**, click on the item no.

TYPE DBDR

with brake disk

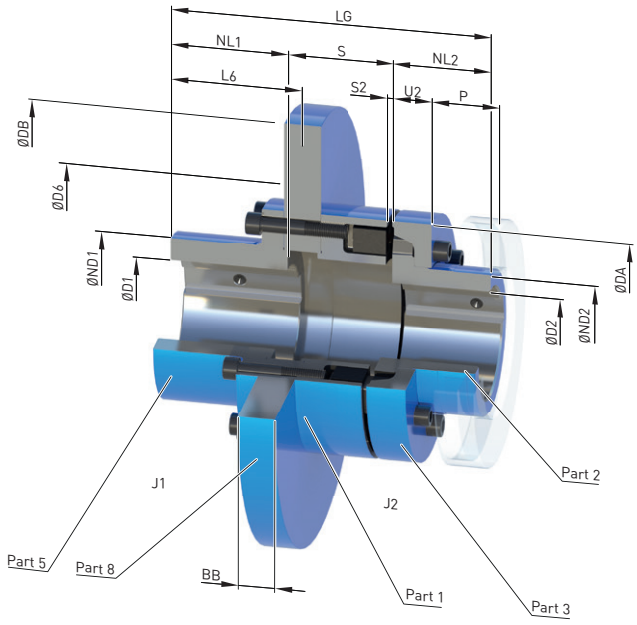

Size	Rated torque flexible type 80 ShoreA	Dimensions in mm																Mass moment of inertia		↗ Article no. [1]	Weight
		Bore with keyway to DIN 6885-1																			
	T_{KN}	D1	D2		DA	ND1	ND2	NL1	NL2	S	ΔS	S2	DB [2]	D6	BB [2]	L6	LG	J_1	J_2		m
	Nm	max.	min.	max.							+/–		min.	min.				min. kgm²	kgm²		kg
								72		54.35					12.7	74	181.35	0.11			14.7
140	500	60	–	60	140	85	80.5	72	55	57.5	1.0	3	315	150	15	76	184.5	0.13	0.008	2LC0170-6AV	16.2
								188		73					30	200	316	0.24			26.9
								90		58.35					12.7	91	208.35	0.12			18.5
160	840	75	–	70	160	105	93.5	90	60	62.5	2.0	4	315	170	15	94	212.5	0.14	0.013	2LC0170-7AV	20
								188		78					30	200	326	0.26			31
								90		60.35					12.7	91	220.35	0.35			25
180	1250	90	–	80	180	125	106	90	70	64.5	2.0	4	315	190	15	94	224.5	0.37	0.024	2LC0170-8AV	26
								188		80					30	200	338	0.57			42
								95		67.35					12.7	97	242.35	0.32			32
200	1950	95	–	90	200	135	119	95	80	70.5	2.0	4	355	210	15	99	245.5	0.36	0.04	2LC0171-0AV	35
								188		86					30	200	354	0.67			54

Configurable variants [1]

- ØD1 With finished bore
- ØD2 Without finished bore
  With finished bore

[1] To identify complete item numbers specifying the available finish boring options and – if necessary – further order options, please use our configurators on **flender.com**.

[2] For the available DB · BB brake disk dimensions, please refer to the product configurator on **flender.com**.

↗ For online configuration on **flender.com**, click on the item no.

Size	Rated torque flexible type 80 ShoreA	Dimensions in mm																Mass moment of inertia		↗ Article no. [1]	Weight
		Bore with keyway to DIN 6885-1																			
	T_{KN}	D1	D2		DA	ND1	ND2	NL1	NL2	S	ΔS	S2	DB [2]	D6	BB [2]	L6	LG	J_1	J_2		m
	Nm	max.	min.	max.							+/–		min.	min.				min. kgm²	kgm²		kg
								100		72.35					12.7	103	262.35	0.52			43
225	**2300**	**115**	–	**100**	225	160	135	100	90	74.5	2.0	4	400	235	15	104	264.5	0.59	0.08	**2LC0171-1AV**	46
								188		90					30	200	368	1.1			71
								105		83.35					12.7	107	288.35	1.6			56
250	**3900**	**120**	–	**115**	250	170	153	105	100	86.5	+2/-3	6	450	260	15	109	291.5	1.7	0.12	**2LC0171-2AV**	59
								188		102					30	200	390	2.5			88
								120		87.35					12.7	122	317.35	1.3			73
280	**5500**	**140**	54	**125**	280	200	168	120	110	90.5	+2/-3	6	500	350	15	124	320.5	1.5	0.19	**2LC0171-3AV**	77
								188		106					30	200	404	2.7			112
								130		87.35					12.7	130	342.35	2.1			95
315	**7100**	**140**	45	**145**	315	200	196	130	125	92.5	+2/-3	6	500	350	15	134	347.5	2.3	0.33	**2LC0171-4AV**	100
								188		108					30	200	421	4.2			140
								135		97.35					12.7	136	372.35	3.3			129
350	**10800**	**165**	60	**165**	350	230	226	135	140	101.5	+2/-3	6	500	360	15	139	376.5	3.8	0.57	**2LC0171-5AV**	134
								188		117					30	200	445	6.7			184

Configurable variants [1]

- ØD1 With finished bore
- ØD2 Without finished bore
  With finished bore

Notes

- For dimensions U2 and P, see type A on **page 7/11**.
- Weights and mass moments of inertia apply to maximum bores.
- Maximum speed n_{max} = 1528/DB (n_{max} in rpm, DB in m)
  Observe maximum speed of type A.
- Other brake disk diameters DB and brake disk widths BB on request.

Ordering example

- N-EUPEX DBDR coupling, size 200, brake disk 450 x 30 mm
- Part 5: Bore D1 55H7 mm, keyway to DIN 6885-1 P9 and set screw
- Part 2: Bore D2 60H7 mm, keyway to DIN 6885-1 and set screw
- Coupling micro-balanced G 6.3 at 1500 rpm in accordance with half parallel key standard

Article no.: 2LC0171-0AV99-0GA0-Z L1D+M1E+W02+Y95
Plain text to Y95: G=6.3;n=1500rpm

[1] To identify complete item numbers specifying the available finish boring options and – if necessary – further order options, please use our configurators on **flender.com**.

[2] For the available DB · BB brake disk dimensions, please refer to the product configurator on **flender.com**.

↗ For online configuration on **flender.com**, click on the item no.

TYPE ERN

with slip unit

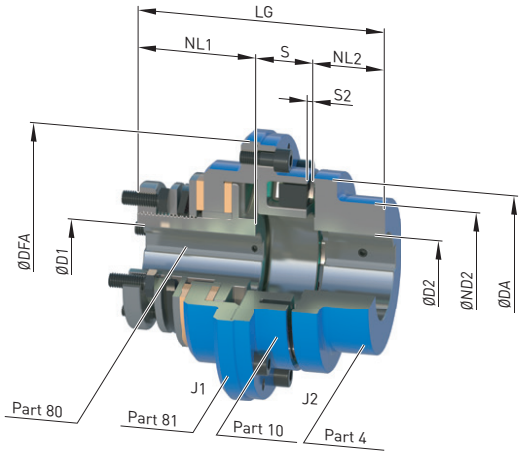

Size	Rated torque flexible type 80 ShoreA	Maximum slip torque [2] Spring set		Speed	Dimensions in mm												Mass moment of inertia		↗ Article no. [1]	Weight
					Bore with keyway to DIN 6885-1															
	T_{KN} Nm	T_{R1} Nm	T_{R2} Nm	n_{Kmax} rpm	D1 max.	D2 max.	DA	ND2	NL1	NL2	S	ΔS +/–	S2	DFA	LG		J_1 kgm²	J_2 kgm²		m kg
80	**85**	130	240	3800	**30**	**42**	80	68	55	30	25	1.0	3	109	110		0.0039	0.0006	**2LC0170-2BE**	3.3
95	**140**	190	340	3600	**35**	**48**	95	76	66	35	28	1.0	3	123	129		0.007	0.0012	**2LC0170-3BE**	4.8
110	**225**	190	340	3600	**35**	**55**	110	86	66	40	31	1.0	3	147	137		0.010	0.0024	**2LC0170-4BE**	5.8
125	**345**	350	650	3000	**45**	**60**	125	100	77	50	35	1.0	3	161	162		0.017	0.005	**2LC0170-5BE**	8.9
140	**500**	650	1200	2500	**60**	**65**	140	100	86	55	38	1.0	3	183	179		0.035	0.008	**2LC0170-5BE**	13
160	**840**	650	1200	2500	**60**	**70**	160	108	86	60	44	2.0	4	204	190		0.050	0.013	**2LC0170-7BE**	15
180	**1250**	1000	1800	2100	**65**	**80**	180	125	93	70	47	2.0	4	224	210		0.084	0.025	**2LC0170-8BE**	22
200	**1950**	2200	4000	1800	**80**	**85**	200	140	105	80	52	2.0	4	252	237		0.16	0.044	**2LC0171-0BE**	32
225	**2300**	2200	4000	1800	**80**	**90**	225	150	105	90	57	2.0	4	278	252		0.22	0.064	**2LC0171-1BE**	37
250	**3900**	3800	6800	1500	**90**	**100**	250	165	120	100	66.5	2.5	5.5	319	286.5		0.51	0.10	**2LC0171-2BE**	60
280	**5500**	5500	10000	1500	**120**	**110**	280	180	120	110	71.5	2.5	5.5	349	301.5		0.77	0.17	**2LC0171-3BE**	74

Configurable variants [1]

- ØD1 With finished bore
- ØD2 Without finished bore
  With finished bore

Notes

- Weights and mass moments of inertia apply to maximum bores.

Ordering example

- N-EUPEX ERN coupling, size 200
  Slip torque T_R = 4000 Nm
- Part 1: Bore D1 65H7 mm, keyway to DIN 6885-1 and set screw
- Part 2: Bore D2 50H7 mm, keyway to DIN 6885-1 and set screw

Article no.: 2LC0171-0BE99-2AA0 L1F+M1C

[1] To identify complete item numbers specifying the available finish boring options and – if necessary – further order options, please use our configurators on **flender.com**.

[2] Adjustable slip torque according to operating instructions.

↗ For online configuration on **flender.com**, click on the item no.

GENERAL

Technical specifications, N-EUPEX DS series

Power ratings of the N-EUPEX DS series

Size	Rated torque	Maximum torque	Torsional stiffness at 50 % capacity utilization [1]	Assembly	Permitted shaft misalignment at speed [3] n = 1500 rpm	
				Gap dimension [2]	Radial	Angle
	T_{KN}	T_{Kmax}	C_{Tdyn}	ΔS	ΔK_r	ΔK_w
	Nm	Nm	kNm/rad	mm	mm	°
66	19	38	0.73	1.0	0.2	0.15
76	34	68	1.36	1.0	0.2	0.15
88	60	120	2.62	1.0	0.2	0.12
103	100	200	4.00	1.0	0.2	0.12
118	160	320	6.30	1.0	0.2	0.10
135	240	480	10.5	1.0	0.25	0.10
152	360	720	13.6	1.0	0.25	0.10
172	560	1120	27.2	2.0	0.3	0.10
194	880	1760	47.0	2.0	0.3	0.10
218	1340	2680	70.0	2.0	0.3	0.09
245	2000	4000	106	2.0	0.35	0.09
272	2800	5600	149	2.5	0.35	0.08
305	3900	7800	214	2.5	0.4	0.08
340	5500	11000	350	2.5	0.4	0.08
380	7700	15400	480	2.5	0.5	0.08
430	10300	20600	730	2.5	0.5	0.08
472	13500	27000	990	2.5	0.6	0.08
514	16600	33200	1270	2.5	0.6	0.07
556	21200	42400	1540	2.5	0.65	0.07

For coupling fatigue torque:
$T_{KW} = 0{,}15 \cdot T_{KN}$, where $T_N > T_W$ must be adhered to.

Note

For fitting, the maximum gap dimension of
S max. = S + ΔS and the minimum gap dimension of
S min. = S – ΔS are permitted.

[1] The correction factors for torsion spring stiffness and permitted shaft misalignment correspond to the specifications for the puncture-proof types **page 7/9**

[2] Does not apply to type HDS.

[3] The maximum speed for the respective type must be noted. For additional information on the allowable shaft misalignment, please refer to the operating instructions.

TYPE ADS

for easy elastomer flexible replacement

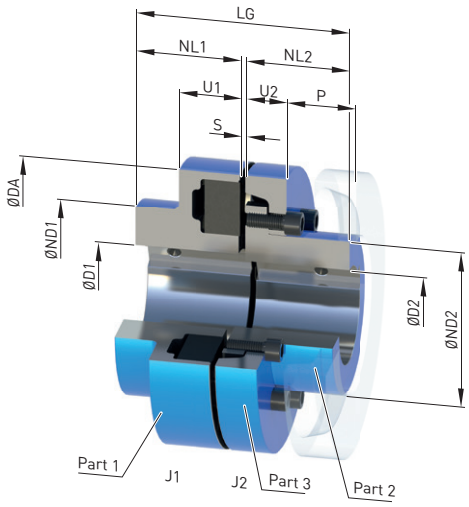

Size	Rated torque	Speed	Dimensions in mm													Mass moment of inertia	↗ Article no. [1]	Weight
			Bore with keyway to DIN 6885-1															
	T_{KN}	n_{Kmax}	D1		D2		DA	ND1	ND2	NL1/ NL2	S	U1	U2	P	LG	J_1/J_2		m
	Nm	rpm	min.	max.	min.	max.										kgm²		kg
118	**160**	5300	-	**50**	-	**45**	118	86	60.5	40	3	34	20	33	83	0.003	**2LC0110-4AB**	2.8
135	**240**	5100	-	**60**	-	**55**	135	100	73.5	50	3	36	23	38	103	0.005	**2LC0110-5AB**	4.3
152	**360**	4900	-	**65**	-	**60**	152	108	80.5	55	3	36	28	43	113	0.008	**2LC0110-6AB**	5.9
172	**560**	4250	-	**70**	-	**70**	172	118	93.5	60	4	41	28	47	124	0.014	**2LC0110-7AB**	8.2
194	**880**	3800	-	**80**	-	**80**	194	135	106	70	4	44	30	50	144	0.025	**2LC0110-8AB**	12
218	**1340**	3400	-	**85**	-	**90**	218	150	119	80	4	47	32	53	164	0.05	**2LC0111-0AB**	17
245	**2000**	3000	-	**90**	-	**100**	245	150	135	90	4	52	38	61	184	0.08	**2LC0111-1AB**	23
272	**2800**	2750	46	**100**	-	**115**	272	165	153	100	5.5	60	42	69	205.5	0.14	**2LC0111-2AB**	32
305	**3900**	2450	49	**110**	54	**125**	305	180	168	110	5.5	65	42	73	225.5	0.22	**2LC0111-3AB**	43
340	**5500**	2150	49	**120**	45	**145**	340	200	196	125	5.5	70	47	78	255.5	0.39	**2LC0111-4AB**	61
380	**7700**	2000	61	**140**	60	**165**	380	230	226	140	5.5	74	51	83	285.5	0.69	**2LC0111-5AB**	86
430	**10300**	1700	66	**150**	65	**180**	430	250	246	160	5.5	78	56	88	325.5	1.2	**2LC0111-6AB**	120
472	**13500**	1550	80	**160**	80	**190**	472	265	261	180	7.5	86	64	99	367.5	1.9	**2LC0111-7AB**	161
514	**16600**	1400	90	**180**	90	**215**	514	300	296	190	7.5	90	65	104	387.5	2.9	**2LC0111-8AB**	206
556	**21200**	1300	100	**190**	100	**225**	556	315	310	210	7.5	102	68	115	427.5	4.1	**2LC0112-0AB**	256

Configurable variants [1]

- ØD1 Without finished bore
  With finished bore
- ØD2 Without finished bore
  With finished bore

Notes

- Weights and mass moments of inertia apply to maximum bores.

Ordering example

- N-EUPEX ADS coupling, size 135
- Part 1: Bore D1 42H7 mm, keyway to DIN 6885-1 and set screw
- Part 2: Bore D2 32H7 mm, keyway to DIN 6885-1 and set screw

Article no.: 2LC0110-5AB99-0AA0 L0X+M0T

[1] To identify complete item numbers specifying the available finish boring options and – if necessary – further order options, please use our configurators on **flender.com**.

↗ For online configuration on **flender.com**, click on the item no.

TYPE BDS

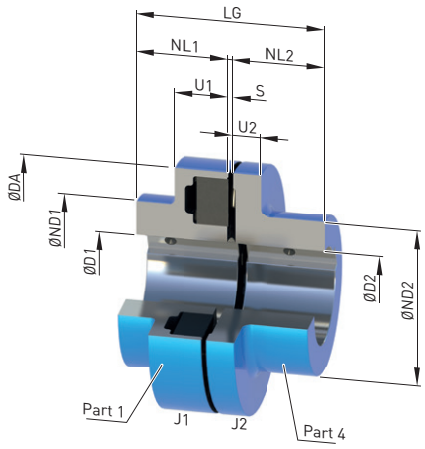

Size	Rated torque	Speed	Dimensions in mm Bore with keyway to DIN 6885-1												Mass moment of inertia	↗ Article no. [1]	Weight
	T_{KN}	n_{Kmax}	D1		D2		DA	ND1	ND2	NL1/ NL2	S	U1	U2	LG	J_1/J_2		m
	Nm	rpm	min.	max.	min.	max.									kgm²		kg
66	**19**	7500	-	**20**	-	**25**	66	66	40	20	3	20	8	43	0.0001	**2LC0110-0AA**	0.46
76	**34**	7000	-	**28**	-	**30**	76	76	50	20	3	20	8	43	0.0002	**2LC0110-1AA**	0.64
88	**60**	6000	-	**35**	-	**42**	88	88	68	30	3	30	10	63	0.0008	**2LC0110-2AA**	1.4
103	**100**	5500	-	**45**	-	**48**	103	76	76	35	3	30	12	73	0.0015	**2LC0110-3AA**	2.1
118	**160**	5300	-	**50**	-	**55**	118	86	86	40	3	34	14	83	0.003	**2LC0110-4AA**	3.0
135	**240**	5100	-	**60**	-	**60**	135	100	100	50	3	36	18	103	0.006	**2LC0110-5AA**	5.1
152	**360**	4900	-	**65**	-	**65**	152	108	100	55	3	36	20	113	0.009	**2LC0110-6AA**	6.4
172	**560**	4250	-	**70**	-	**70**	172	118	108	60	4	41	20	124	0.016	**2LC0110-7AA**	8.7
194	**880**	3800	-	**80**	-	**80**	194	135	125	70	4	44	20	144	0.028	**2LC0110-8AA**	13
218	**1340**	3400	-	**85**	-	**85**	218	150	140	80	4	47	24	164	0.052	**2LC0111-0AA**	19
245	**2000**	3000	-	**90**	-	**90**	245	150	150	90	4	52	18	184	0.078	**2LC0111-1AA**	24
272	**2800**	2750	46	**100**	46	**100**	272	165	165	100	5.5	60	18	205.5	0.13	**2LC0111-2AA**	32
305	**3900**	2450	49	**110**	54	**110**	305	180	180	110	5.5	65	20	225.5	0.21	**2LC0111-3AA**	43

Configurable variants [1]

- ØD1 Without finished bore
  With finished bore
- ØD2 Without finished bore
  With finished bore

Notes

- Weights and mass moments of inertia apply to maximum bores.

Ordering example

- N-EUPEX BDS coupling, size 103
- Part 1: Bore D1 42H7 mm, keyway to DIN 6885-1 and set screw
- Part 4: Bore D2 32H7 mm, keyway to DIN 6885-1 and set screw

Article no.: 2LC0110-3AA99-0AA0 L0X+M0T

[1] To identify complete item numbers specifying the available finish boring options and – if necessary – further order options, please use our configurators on **flender.com**.

↗ For online configuration on **flender.com**, click on the item no.

TYPE HDS

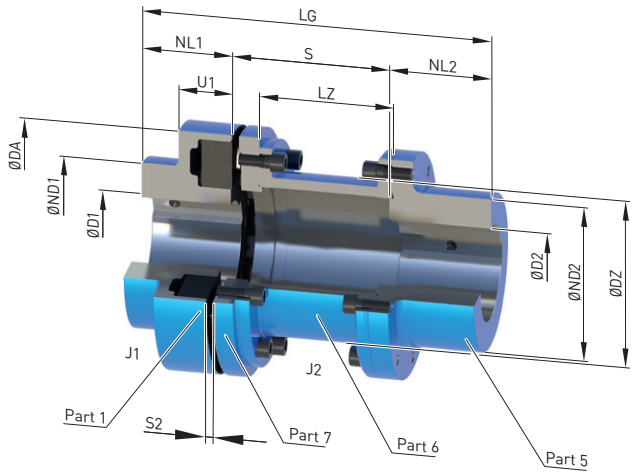

Size	Rated torque T_{KN} Nm	Speed n_{Kmax} rpm	Dimensions in mm Bore with keyway to DIN 6885-1 D1 min.	D1 max.	D2 min.	D2 max.	DA	ND1	ND2	NL1	NL2	S	S2	LZ	DZ	LG	Mass moment of inertia J_1 kgm²	J_2 kgm²	↗ Article no. [1]	Weight m kg
88	**60**	6000	-	**35**	-	**38** [2]	88	88	55	30	45	100	5	87	51	175	0.0007	0.0014	**2LC0110-2AC**	2.6
												140		127		215		0.0015	**2LC0110-2AC**	2.7
103	**100**	5500	-	**45**	-	**48** [2]	103	76	70	35	45	100	5	87	63	180	0.001	0.0029	**2LC0110-3AC**	3.8
												140		127		220		0.0032	**2LC0110-3AC**	4.1
118	**160**	5300	-	**50**	-	**55** [2]	118	86	80	40	50	100	5	85	73	190	0.003	0.0059	**2LC0110-4AC**	4.9
											50	140		125		230		0.0063	**2LC0110-4AC**	5.3
											60	180		165		280		0.0066	**2LC0110-4AC**	5.7
135	**240**	5100	-	**60**	-	**60** [2]	135	100	90	50	50	100	5	85	85	200	0.006	0.01	**2LC0110-5AC**	7.3
											50	140		125		240		0.01	**2LC0110-5AC**	7.8
											60	180		165		290		0.012	**2LC0110-5AC**	8.2
											70	200		185		320		0.012	**2LC0110-5AC**	8.5
											80	250		235		380		0.013	**2LC0110-5AC**	9.0
152	**360**	4900	-	**65**	-	**65** [2]	152	108	100	55	65	100	5	82	91	220	0.011	0.02	**2LC0110-6AC**	10.8
											65	140		122		260		0.02	**2LC0110-6AC**	11.3
											65	180		162		300		0.022	**2LC0110-6AC**	11.8
											65	200		182		320		0.023	**2LC0110-6AC**	12.1
											80	250		232		385		0.024	**2LC0110-6AC**	12.6

Configurable variants [1]

- ØD1 Without finished bore
  With finished bore
- ØD2 Without finished bore
  With finished bore

[1] To identify complete item numbers specifying the available finish boring options and – if necessary – further order options, please use our configurators on **flender.com**.

[2] For bore diameters greater than the following values, the feather key must be at least 3 mm behind the shaft end. Size 88 D2 > 32 mm; size 103 D2 > 42 mm; size 118 D2 > 50 mm; size 135 D2 > 59 mm; size 152 D2 > 64 mm.

↗ For online configuration on **flender.com**, click on the item no.

Size	Rated torque	Speed	Dimensions in mm															Mass moment of inertia		↗ Article no. [1]	Weight
			Bore with keyway to DIN 6885-1																		
	T_{KN}	n_{Kmax}	D1		D2		DA	ND1	ND2	NL1	NL2	S	S2	LZ	DZ	LG	J_1	J_2		m
	Nm	rpm	min.	max.	min.	max.											kgm²	kgm²		kg
											70	100		81.5		230		0.03	**2LC0110-7AC**	13.8
											70	140		121.5		270		0.034	**2LC0110-7AC**	14.5
172	**560**	4250	-	**70**	-	**70**	172	118	108	60	70	180	6	161.5	111	310	0.019	0.036	**2LC0110-7AC**	15.4
											70	200		181.5		330		0.037	**2LC0110-7AC**	15.7
											80	250		231.5		390		0.039	**2LC0110-7AC**	16.7
												140		121.5		290		0.057	**2LC0110-8AC**	20
194	**880**	3800	-	**80**	-	**80**	194	135	125	70	80	180	6	161.5	131	330	0.037	0.061	**2LC0110-8AC**	21
												200		181.5		350		0.063	**2LC0110-8AC**	22
												250		231.5		400		0.068	**2LC0110-8AC**	23
												140		118.5		310		0.10	**2LC0111-0AC**	30
218	**1340**	3400	-	**85**	-	**90**	218	150	140	80	90	180	6	158.5	144	350	0.062	0.11	**2LC0111-0AC**	31
												200		178.5		370		0.11	**2LC0111-0AC**	32
												250		228.5		420		0.12	**2LC0111-0AC**	33
												140		118.5		330		0.16	**2LC0111-1AC**	34
245	**2000**	3000	-	**90**	-	**100**	245	150	150	90	100	180	6	158.5	169	370	0.09	0.17	**2LC0111-1AC**	35
												200		178.5		390		0.18	**2LC0111-1AC**	36
												250		228.5		440		0.19	**2LC0111-1AC**	38
												180		152.5		390		0.3	**2LC0111-2AC**	51
272	**2800**	2750	46	**100**	46	**110**	272	165	165	100	110	200	8	172.5	185	410	0.16	0.31	**2LC0111-2AC**	52
												250		222.5		460		0.33	**2LC0111-2AC**	55
305	**3900**	2450	49	**110**	51	**130**	305	180	180	110	120	250	8	222.5	215	480	0.28	0.51	**2LC0111-3AC**	71
340	**5500**	2150	49	**120**	51	**140**	340	200	200	125	140	250	8	222.5	246	515	0.50	0.85	**2LC0111-4AC**	101
380	**7700**	2000	61	**140**	51	**160**	380	230	230	140	150	250	8	220.5	272	540	0.80	1.4	**2LC0111-5AC**	125
430	**10300**	1700	66	**150**	51	**180**	430	250	250	160	180	250	8	185.5	311	590	1.4	2.4	**2LC0111-6AC**	195
472	**13500**	1550	80	**160**	51	**190**	472	265	265	180	180	250	10	182	354	610	2.1	4.0	**2LC0111-7AC**	224

Configurable variants [1]

- ØD1 Without finished bore
  With finished bore
- ØD2 Without finished bore
  With finished bore

Notes

- For dimension U1, see type ADS on **page 7/30** and type BDS on **page 7/31**.
- During assembly, the gap dimension S2 must not exceed the permissible tolerance of +1 mm.
- For sizes 305 to 472 the outer diameter of part 5 and part 7 is smaller than ØDA.
- Weights and mass moments of inertia apply to maximum bores.

Ordering example

- N-EUPEX HDS coupling, size 103, S = 100 mm
- Part 1: Bore D1 42H7 mm, keyway to DIN 6885-1 and set screw
- Part 5: Bore D2 32H7 mm, keyway to DIN 6885-1 and set screw
- Coupling micro-balanced G6.3 at 1500 rpm in accordance with half parallel key standard

Article no.: 2LC0110-3AC99-0AA0-Z L0X+M0T+W02+Y95
Plain text to Y95: G=6.3;n=1500rpm

[1] To identify complete item numbers specifying the available finish boring options and – if necessary – further order options, please use our configurators on **flender.com**.

↗ For online configuration on **flender.com**, click on the item no.

SPARE AND WEAR PARTS

Elastomer flexibles of the N-EUPEX series

NBR elastomer flexibles 80 ShoreA standard type			
Size	Article No. (flexible set for one coupling)	Number of flexibles per set	Weight per set kg
58	2LC0170-0WA00-0AA0	4	0.012
68	2LC0170-1WA00-0AA0	5	0.015
80	2LC0170-2WA00-0AA0	6	0.02
95	2LC0170-3WA00-0AA0	6	0.03
110	2LC0170-4WA00-0AA0	6	0.045
125	2LC0170-5WA00-0AA0	6	0.06
140	2LC0170-6WA00-0AA0	6	0.09
160	2LC0170-7WA00-0AA0	7	0.12
180	2LC0170-8WA00-0AA0	8	0.17
200	2LC0171-0WA00-0AA0	8	0.23
225	2LC0171-1WA00-0AA0	8	0.3
250	2LC0171-2WA00-0AA0	8	0.38
280	2LC0171-3WA00-0AA0	8	0.55
315	2LC0171-4WA00-0AA0	9	0.7
350	2LC0171-5WA00-0AA0	9	0.85
400	2LC0171-6WA00-0AA0	10	1.2
440	2LC0171-7WA00-0AA0	10	1.5
480	2LC0171-8WA00-0AA0	10	2.1
520	2LC0172-0WA00-0AA0	10	2.6
560	2LC0172-1WA00-0AA0	10	3.6
610	2LC0172-2WA00-0AA0	10	4.9
660	2LC0172-3WA00-0AA0	10	6.3
710	2LC0172-4WA00-0AA0	10	7.6

HP elastomer flexibles for type DK/DKS (two-joint)			
Size	Article No. (flexible set for one coupling)	Number of flexibles per set	Weight per set kg
68	2LC0170-1VD00-0AA0	10	0.03
80	2LC0170-2VD00-0AA0	12	0.04
95	2LC0170-3VD00-0AA0	12	0.06
110	2LC0170-4VD00-0AA0	12	0.09
125	2LC0170-5VD00-0AA0	12	0.12
140	2LC0170-6VD00-0AA0	12	0.18
160	2LC0170-7VD00-0AA0	14	0.24
180	2LC0170-8VD00-0AA0	16	0.34
200	2LC0171-0VD00-0AA0	16	0.46
225	2LC0171-1VD00-0AA0	16	0.6
250	2LC0171-2VD00-0AA0	16	0.8
280	2LC0171-3VD00-0AA0	16	1.1

Notes

- The elastomer flexibles are wear parts. The service life depends on the operating conditions.

Elastomer flexibles of the N-EUPEX DS series

NBR elastomer flexibles standard type			
Size	Article No. (flexible set for one coupling)	Number of flexibles per set	Weight per set kg
66	2LC0110-0WA00-0AA0	4	0.012
76	2LC0110-1WA00-0AA0	5	0.015
88	2LC0110-2WA00-0AA0	6	0.021
103	2LC0110-3WA00-0AA0	6	0.033
118	2LC0110-4WA00-0AA0	6	0.048
135	2LC0110-5WA00-0AA0	6	0.072
152	2LC0110-6WA00-0AA0	6	0.1
172	2LC0110-7WA00-0AA0	7	0.16
194	2LC0110-8WA00-0AA0	8	0.21
218	2LC0111-0WA00-0AA0	8	0.28
245	2LC0111-1WA00-0AA0	8	0.45
272	2LC0111-2WA00-0AA0	8	0.64
305	2LC0111-3WA00-0AA0	8	0.72
340	2LC0111-4WA00-0AA0	9	0.92
380	2LC0111-5WA00-0AA0	9	1.2
430	2LC0111-6WA00-0AA0	10	1.6
472	2LC0111-7WA00-0AA0	10	2.0
514	2LC0111-8WA00-0AA0	10	2.5
556	2LC0112-0WA00-0AA0	10	3.2

Notes

- The elastomer flexibles are wear parts. The service life depends on the operating conditions.

Friction linings of the N-EUPEX type ERN

Friction linings, standard version			
Size	Article No. (set for one coupling)	Number of friction linings per set	Weight per set kg
80	2LC0170-2VK00-0AA0	2	0.05
95	2LC0170-3VK00-0AA0	2	0.06
110	2LC0170-4VK00-0AA0	2	0.06
125	2LC0170-5VK00-0AA0	2	0.10
140	2LC0170-6VK00-0AA0	2	0.12
160	2LC0170-7VK00-0AA0	2	0.12
180	2LC0170-8VK00-0AA0	2	0.23
200	2LC0171-0VK00-0AA0	2	0.34
225	2LC0171-1VK00-0AA0	2	0.34
250	2LC0171-2VK00-0AA0	2	0.60
280	2LC0171-3VK00-0AA0	2	0.66

Notes

- The friction linings are wear parts. The service life depends on the operating conditions.