FLENDER COUPLINGS
CATALOG **FLE 10.3**
EDITION 2026.1 EN

HIGHLY FLEXIBLE COUPLINGS ELPEX-B, ELPEX-S AND ELPEX

flender.com

FLENDER

FLENDER

HIGHLY FLEXIBLE COUPLINGS

Catalog FLE 10.3 Edition 2026.1 EN

Introduction		E
Torsionally Rigid Gear Couplings	N-ZAPEX XW	4
	N-ZAPEX XN	5
Torsionally Rigid All-Steel Couplings	N-ARPEX, ARPEX	6
Flexible Couplings	N-EUPEX	7
	RUPEX	8
	BIPEX	9
Highly Flexible Couplings	ELPEX-B	10
	ELPEX-S	11
	ELPEX	12
Fluid Couplings	FLUDEX	13
Rigid Couplings	SKZF	16
Appendix		A

FLE 10 CATALOG GROUP

Product catalog FLE 10.1
FLEX-C10001-00-7600
Torsionally Rigid Couplings

Product catalog FLE 10.3
FLEX-C10003-00-7600
Highly Flexible Couplings

Product catalog FLE 10.2
FLEX-C10001-00-7600
Flexible Couplings

Product catalog FLE 10.4
FLEX-C10004-00-7600
Fluid Couplings

For further coupling catalogs, see page A/6

Product catalog FLE 10.5
FLEX-C10120-00-7600
High Performance Couplings

Product catalog FLE 10.7
FLEX-C10122-00-7600
Safety couplings

INTRODUCTION

E

The mechanical drive train comprises individual units such as motor, gear unit and driven machine. The coupling connects these component assemblies.
As well as the transmission of rotary motion and torque, other requirements may be made of the coupling.

- Compensation for shaft misalignment with low restorative forces
- Control of characteristic angular vibration frequency and damping
- Interruption or limitation of torque
- Noise insulation, electrical insulation

Couplings are frequently chosen after the machines to be connected have already been selected. Thanks to a large number of different coupling assembly options, specified marginal conditions for clearance and connection geometry can be met from the standard range. The coupling also performs secondary functions, e.g. providing a brake disk or brake drum for operating or blocking brakes, devices to record speed or the attachment of sprockets or pulleys.

Couplings are divided into two main groups, couplings and clutches.

Clutches interrupt or limited the transmissible torque. The engaging and disengaging forces on externally operated clutches are introduced via a mechanically, electrically, hydraulically or pneumatically operating mechanism. Overload, centrifugal or freewheel clutches draw their engaging energy from the transmitted output.

Rigid couplings, designed as clamp, flanged or mechanism couplings, connect machines which must not undergo any shaft misalignment. Hydrodynamic couplings, often also called fluid or Föttinger couplings, are used as starting couplings in drives with high mass moments of inertia of the driven machine. In drive technology very often flexible, positive couplings, which may be designed to be torsionally rigid, torsionally flexible or highly flexible, are used.

Torsionally rigid couplings are designed to be rigid in a peripheral direction and flexible in radial and axial directions. The angle of rotation and torque are conducted through the coupling without a phase shift.

Torsionally flexible couplings have resilient elements usually manufactured from elastomer materials. Using an elastomer material with a suitable ShoreA hardness provides the most advantageous torsional stiffness and damping for the application. Shaft misalignment causes the resilient elements to deform.

Highly flexible couplings have large-volume (elastomer) resilient elements of low stiffness. The angle of rotation and torque are conducted through the coupling with a considerable phase shift.

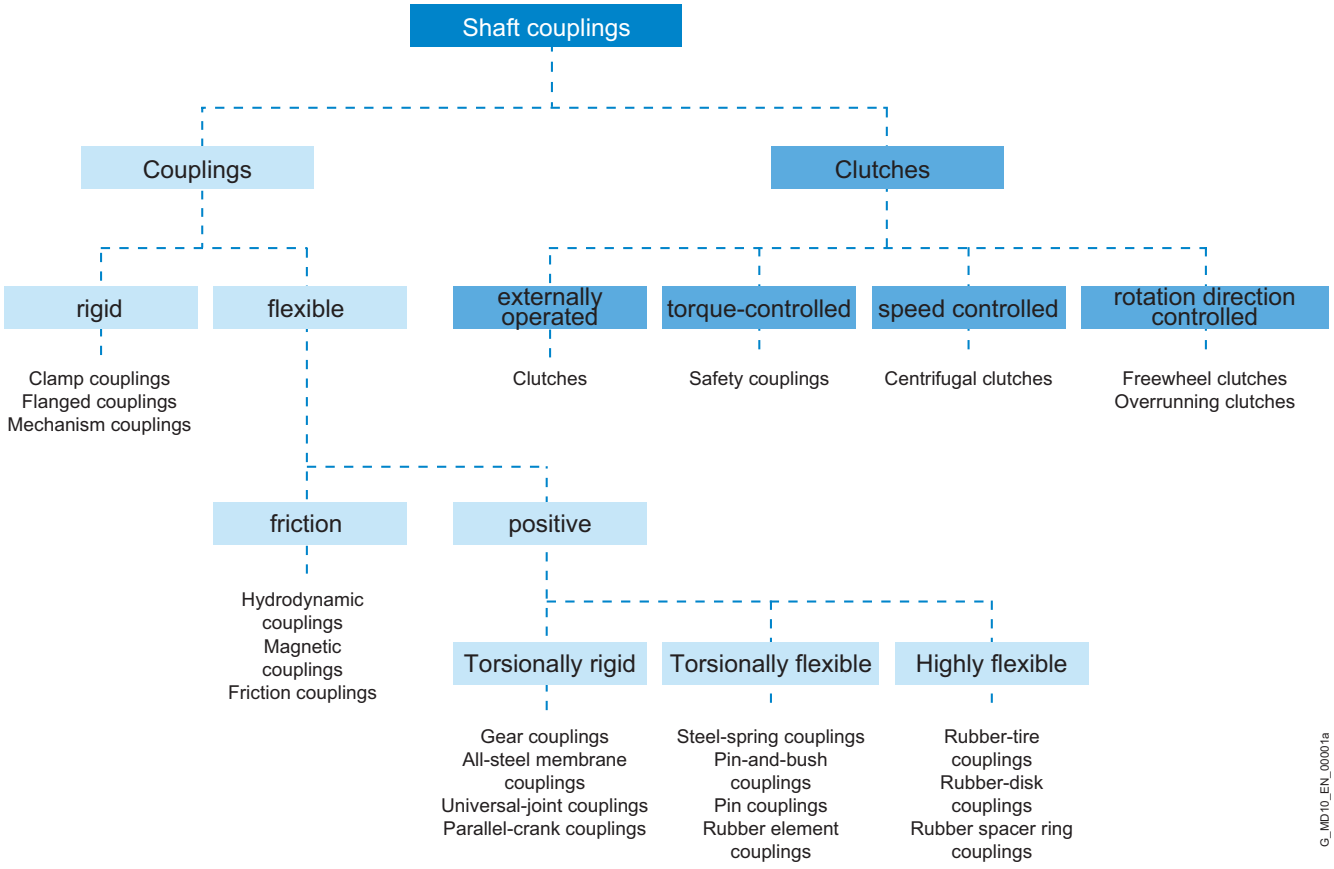
Shaft couplings
Couplings
Clutches
rigid
flexible
externally operated
torque-controlled
speed controlled
rotation direction controlled
Clamp couplings
Flanged couplings
Mechanism couplings
Clutches
Safety couplings
Centrifugal clutches
Freewheel clutches
Overrunning clutches
friction
positive
Hydrodynamic couplings
Magnetic couplings
Friction couplings
Torsionally rigid
Torsionally flexible
Highly flexible
Gear couplings
All-steel membrane couplings
Universal-joint couplings
Parallel-crank couplings
Steel-spring couplings
Pin-and-bush couplings
Pin couplings
Rubber element couplings
Rubber-tire couplings
Rubber-disk couplings
Rubber spacer ring couplings
G_MD10_EN_00001a

OUR COUPLING GROUPS AT A GLANCE

E

N-EUPEX, RUPEX and BIPEX

Flexible Couplings

Flexible Flender couplings have a wide range of possible applications. A broad standard modular system as well as specially designed application-specific couplings are available.

N-EUPEX
cam couplings
Rated torque:
12 Nm ... 93,500 Nm

RUPEX
pin-and-bush couplings
Rated torque:
120 Nm ... 1,690,000 Nm

BIPEX
cam couplings
Rated torque:
21 Nm ... 5,100 Nm

ELPEX, ELPEX-B and ELPEX-S

Highly Flexible Couplings

ELPEX® couplings are free of circumferential back-lash. Their damping capacity and low torsional stiff-ness make them especially well-suited for coupling machines with strongly non-uniform torque characteristics or large shaft misalignment.

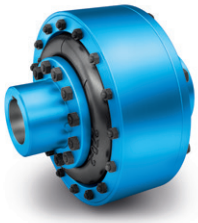

ELPEX
elastic ring couplings
Rated torque:
1,600 Nm ... 90,000 Nm

ELPEX-B
elastic tire couplings
Rated torque:
57 Nm ... 19,000 Nm

ELPEX-S
rubber disk couplings
Rated torque:
200 Nm ... 63,000 Nm

N-ZAPEX gear couplings and ARPEX all-steel couplings

Torsionally rigid couplings

For transmission of high torques, we offer both ARPEX all-steel couplings and N-ZAPEX gear couplings in a range
of versions. Their purposes of application vary according to specific requirements with respect to shaft misalignment, temperature and torque.

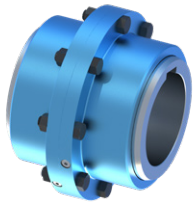

N-ZAPEX
gear couplings
Rated torque:
1,400 Nm ... 10,000,000 Nm

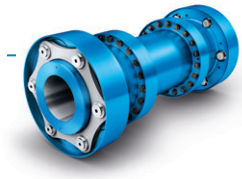

ARPEX
high performance
couplings
Rated torque:
1,100 Nm ... 936,000 Nm

N-ARPEX and ARPEX
all-steel couplings
Rated torque:
92 Nm ... 2,000,000 Nm

FLUDEX

Hydrodynamic couplings

The FLUDEX hydrodynamic fluid coupling works according to the Föttinger principle. It functions entirely free of wear.

FLUDEX
fluid couplings
Power:
1.2 kW ... 2,500 kW

Application-specific couplings

Couplings for rail vehicles must meet high demands. Due to their high degree of standardization and wide variety, they can be used in the most diverse vehicle types.

Railway coupling
Rated torque:
1,000 Nm ... 9,500 Nm

Each wind turbine coupling is designed to optimally meet the requirements of the respective wind turbine. The coupling connects the fast-running gear shaft with the generator shaft and is available for wind turbines with a capacity of up to 12 MW.

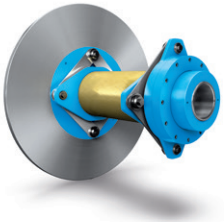

Wind turbine couplings
Rated torque:
10,000 Nm ... 60,000 Nm

AIQ DETECT

for wear detection on the N-EUPEX and RUPEX

E

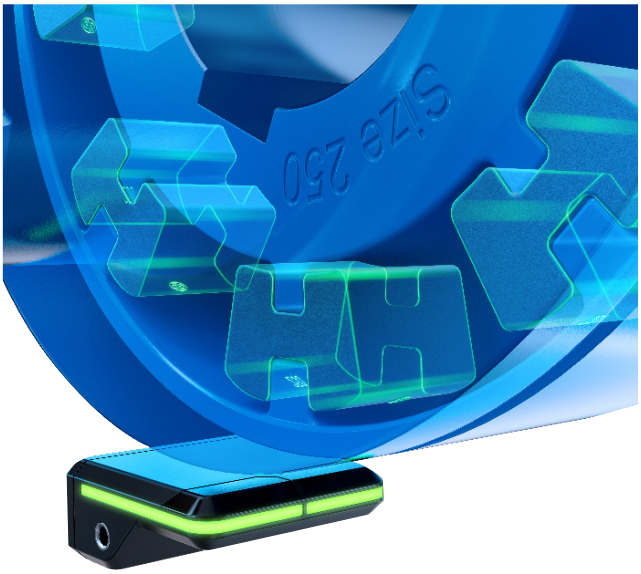

The AIQ Detect uses several Hall sensors to determine the wear on the flexible Flender couplings of the N-EUPEX and RUPEX via sensor magnets installed on the coupling side. The progressive wear of the elastomer components of the RUPEX and N-EUPEX results in a torsion angle between the coupling halves. This angle of rotation and the resulting time difference between the coupling halves make it possible to detect the degree of wear of the RUPEX and N-EUPEX flexible couplings. The speed of the coupling is also determined.

This information can be evaluated in the customer's control system via analogue and digital outputs that can be configured by the customer. The AIQ Detect also enables the wear status to be output via the built-in LED light strip on the sensor (green = the wear status is OK, yellow = the elastomer components must be replaced, red = the drive-train must be stopped). This information can also be analyzed and displayed via a Bluetooth interface with a mobile device using the AIQ app.

Benefits:

- Continuous wear monitoring
- Coupling status at a glance
- Prevents system failures = maximum operational reliability
- Supports service and maintenance personnel
- Waste reduction (replacement of elastomers only if necessary)
- No annual testing of elastomers necessary
- Flexible and easy to use

Functions:

- Detects wear on elastomers
- Speed measurement
- Remaining life forecast
- Coupling failure detection
- Configurable output signals
- Firmware upgrades via AIQ app

Coupling	Types	Size	Article No.
N-EUPEX	A, B, H	80 – 140	F2E01528467
		160 – 280	F2E01528468
		315 – 710	F2E01528469
RUPEX	RWN, RWS	105 – 1120	F2E01528472
		1250 – 2000	F2E01528473

Notes

- The AIQ Detect is used for continuous wear monitoring of Flender N-EUPEX and RUPEX couplings and can be ordered as an accessory to the coupling
- Make sure that the Flender coupling has the 'AIQ Detect-ready' status (see ordering example)

Ordering example

- N-EUPEX coupling A, size 110 with the status "AIQ Detect-ready" (Article No. addition A99)
- AIQ Detect for wear monitoring of N-EUPEX coupling A, size 110

Article No. N-EUPEX: 2LC0170-4AB99-0AA0-Z L0M+M0P+A99

Article No. AIQ Detect: F2E01528467 (according to the table)

TECHNICAL INFORMATION AND COUPLING SELECTION

Technical information	**E/12**
Shaft misalignment	E/12
Balancing	E/13
Shaft-hub connections	E/15
Standards	E/16
Key to symbols	E/17
Selection of the coupling series	**E/18**
Typical coupling solutions for different example applications	E/19
Selection of the coupling size	**E/20**
Coupling load in continuous operation	E/20
Coupling load at maximum and overload conditions	E/21
Coupling load due to dynamic torque load	E/21
Checking the maximum speed	E/21
Checking permitted shaft misalignment	E/22
Checking bore diameter, mounting geometry and coupling design	E/22
Coupling behavior under overload conditions	E/22
Checking shaft-hub connection	E/22
Checking low temperature and chemically aggressive environment	E/22
Features of the standard type	**E/23**

TECHNICAL INFORMATION

E

Shaft misalignment

Shaft misalignment is the result of displacement during assembly and operation and, where machines constructed with two radial bearings each are rigidly coupled, will cause high loads being placed on the bearings. Elastic deformation of base frame, foundation and machine housing will lead to shaft misalignment which cannot be prevented, even by precise alignment.

Furthermore, because individual components of the drive train heat up differently during operation, heat expansion of the machine housings causes shaft misalignment. Poorly aligned drives are often the cause of seal, rolling bearing or coupling failure. Alignment should be carried out by specialist personnel in accordance with operating instructions.

Depending on the direction of the effective shaft misalignment a distinction is made between:

G_MD10_XX_00002

Axial misalignment

G_MD10_XX_00003

Radial misalignment

G_MD10_XX_00004

Angular misalignment

Couplings can be categorized into one of the following groups:

Single-joint couplings

Couplings with flexible elements mainly made of elastomer materials. Shaft misalignment results in deformation of the elastomer elements. The elastomer elements can absorb shaft misalignment as deformations in an axial, radial and angular direction. The degree of permissible misalignment depends on the coupling size, the speed and the type of elastomer element.
Single-joint couplings do not require an adapter and are therefore short versions.

Example:
In the case of a RUPEX RWN 198 coupling with an outer diameter of 198 mm and a speed of 1500 rpm, the permitted radial misalignment is Δ_{Kr} = 0.3 mm.

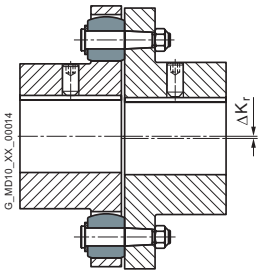

Two-joint couplings

Two-joint couplings are always designed with an adapter. The two joint levels are able to absorb axial and angular misalignment. Radial misalignment occurs via the gap between the two joint levels and the angular displacement of the joint levels. The permitted angular misalignment per joint level is frequently about 0.5°. The permitted shaft misalignment of the coupling can be adjusted via the length of the adapter. If there are more than two joint levels, it is not possible to define the position of the coupling parts relative to the axis of rotation. (The less frequently used parallel-crank couplings are an exception).

Example:
N-ARPEX ARN-6 NEN 217-6 with a shaft distance of 140 mm with a permitted radial misalignment of ΔK_r = 2.2 mm (angle per joint level 1.0°).

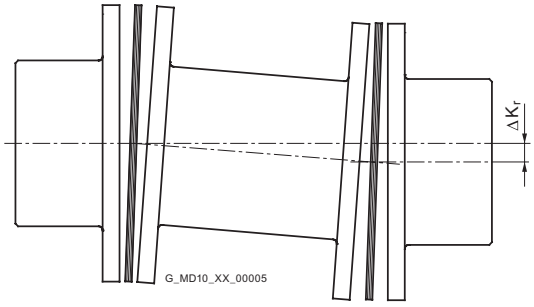

Balancing

Balance quality levels
The so-called quality level G to DIN ISO 21940 indicates a range of permitted residual imbalance from zero up to an upper limit. Applications can be grouped on the basis of similarity analysis. For many applications a coupling balance quality of G 16 is sufficient. On drives susceptible to vibration the balance quality should be G 6.3. Only in special cases is a better balance quality required.

Balancing standard in accordance with DIN ISO 21940-32
Besides the required balance quality, it is necessary to set standards which define how the mass of the parallel key is to be taken into consideration when balancing. In the past, motor rotors have frequently been balanced in accordance with the full parallel key standard. The "appropriate" balance condition of the coupling hub was described as "balancing with open keyway" or "balancing after keyseating". Today it is usual for the motor rotor, as well as the gear unit and driven machine shaft, to be balanced in accordance with the half parallel key standard.

Full parallel key standard

The parallel key is inserted in the shaft keyway, then balancing is carried out. The coupling hub must be balanced without parallel key after keyseating.

Marking of shaft and hub with "F" (for "full").

Half parallel key standard

The balancing standard normally applied today. Before balancing, a half parallel key is inserted in the shaft and another in the coupling hub. Alternatively, balancing can be carried out before cutting the keyway.

The balanced parts must be marked with an "H". This marking can be dispensed with if it is absolutely clear which parallel key standard has been applied.

No parallel key standard

Balancing of shaft and coupling hub after keyseating, but without parallel key. Not used in practice. Marking of shaft and hub with "N" (for "no").
The length of the parallel key is determined by the shaft keyway. Coupling hubs may be designed considerably shorter than the shaft.

To prevent imbalance forces caused by projecting parallel key factors when balancing in accordance with the half parallel key standard in the case of applications with high balancing quality requirements, grooved spacer rings can be fitted or stepped parallel keys used.

Flender Balancing Standard

The balancing quality level, together with the operating speed, results in the maximum permissible eccentricity of the center of gravity of the coupling or the coupling subassembly. In the Flender article number the balancing quality can be preset with the help of the order code. Additionally, also the balance quality level to DIN ISO 21940 can be preset together with the operating speed belonging to it, which then be taken as priority.

$$e_{perm} = 9550 \cdot \frac{G}{n}$$

$$e_{coupl} \leqslant e_{perm}$$

Permitted eccentricity of center of gravity	e_{perm}	in µm
Eccentricity of center of gravity of coupling	e_{coupl}	in µm
Balancing quality level	G	in mm/s
Coupling speed	n	in rpm

Eccentricity of center of gravity of coupling e_{coupl}	Flender balancing quality	Order code
maximum 100 µm	standard balancing	without specification
maximum 40 µm	fine balancing	W02
maximum 16 µm	micro-balancing	W03
better than 16 µm	special balancing	on request

TECHNICAL INFORMATION

E

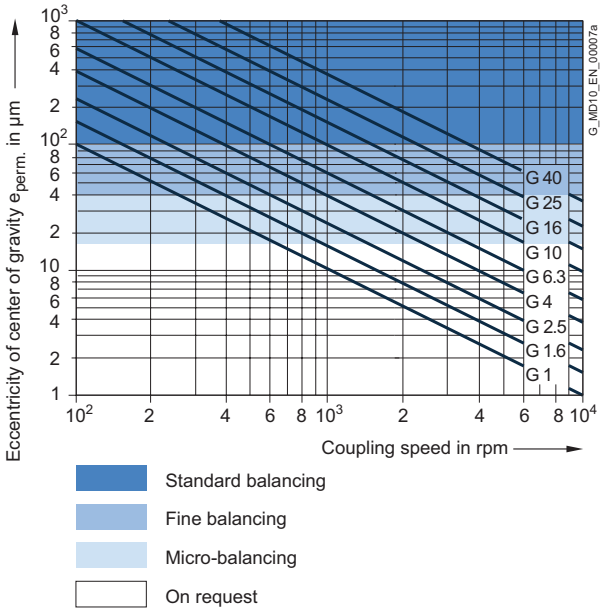

Example:
Coupling speed = 1450 rpm
required balancing quality level G 6.3

$$e_{perm} = 9550 \cdot \frac{G}{n} = 9550 \cdot \frac{6.3}{1450} \ \mu m$$

Thus, the required eccentricity of center of gravity is 41.5 µm. The fine balancing with a maximum eccentricity of center of gravity of 40 mm fulfills this requirement; therefore, the order code W02 has to be specified when ordering.

For many applications the following balancing quality recommendation applies:

Coupling	standard balancing $v = DA \cdot n/19100$	fine balancing
short version with LG ≤ 3 × DA	$v \leq 30$ m/s	$v > 30$ m/s
long version with LG > 3 × DA	$v \leq 15$ m/s	$v > 15$ m/s

Peripheral speed	v	in mm/s
Coupling outer diameter	DA	in mm
Coupling speed	n	in rpm
Coupling length	LG	in mm

The following standards on balancing must be observed:

- couplings are balanced in subassemblies.
- hub parts without finished bore are unbalanced.
- the number of balancing levels (one- or two-level balancing) is specified by Flender.
- without special specification balancing is done in accordance with the half-parallel-key standard. Balancing in accordance with the full-parallel-key standard must be specified in the order number.
- For FLUDEX couplings special balancing standards specified in Section 13 apply.
- ARPEX couplings in standard balancing quality are unbalanced. Thanks to steel components machined all over and precisely guided adapters the balancing quality of standard balancing is nearly always adhered to.

Shaft-hub connections

The bore and the shaft-hub connection of the coupling are determined by the design of the machine shaft. In the case of IEC standard motors, the shaft diameters and parallel key connections are specified in accordance with DIN EN 50347. For diesel motors, the flywheel connections are frequently specified in accordance with SAE J620d or DIN 6288. Besides the very widely used connection of shaft and hub with parallel keys to DIN 6885 and cylindrically bored hubs, couplings with Taper clamping bushes, clamping sets, shrink-fit connections and splines to DIN 5480 are common.

The form stability of the shaft/hub connection can only be demonstrated when shaft dimensions and details of the connection are available. The coupling torques specified in the tables of power ratings of the coupling series do not apply to the shaft-hub connection unrestrictedly.

In the case of the shaft-hub connection with parallel key, the coupling hub must be axially secured, e.g. with a set screw or end washer. The parallel key must be secured against axial displacement in the machine shaft.

All Flender couplings with a finished bore and parallel keyway are designed with a set screw. Exceptions are some couplings of the FLUDEX series, in which end washers are used. During assembly, Taper clamping bushes are frictionally connected to the machine shaft.

TECHNICAL INFORMATION

E

Standards

Machines

2006/42/EG	EC Machinery Directive
2014/34/EU	ATEX Directive – Manufacturer
1999/92/EG	ATEX Directive – Operator – and ATEX Guideline to Directive 1999/92/EC
DIN EN 80079-36	Non-electrical equipment for use in potentially explosive atmospheres
DIN EN 1127	Explosive atmospheres, explosion prevention and protection
DIN EN 50347	General-purpose three-phase induction motors having standard dimensions and outputs

Couplings

DIN 740	Flexible shaft couplings Part 1 and Part 2
VDI Guideline 2240	Shaft couplings - Systematic subdivision according to their properties VDI Technical Group Engineering Design 1971
API 610	Centrifugal Pumps for Petroleum, Chemical and Gas Industry Services
API 671	Special Purpose Couplings for Petroleum, Chemical and Gas Industry Services
ISO 10441	Petroleum, petrochemical and natural gas industries – Flexible couplings for mechanical power transmission-special-purpose applications
ISO 13709	Centrifugal pumps for petroleum, petrochemical and natural gas industries

Balancing

DIN ISO 21940	Requirements for the balancing quality of rigid rotors
DIN ISO 21940-32	Mechanical vibrations; standard governing the type of parallel key during balancing of shafts and composite parts

Shaft-hub connections

DIN 6885	Driver connections without taper action – parallel keys – keyways
SAE J620d	Flywheels for industrial engines ...
DIN 6288	Reciprocating internal combustion engines Dimensions and requirements for flywheels and flexible couplings
ASME B17.1	Keys and keyseats
DIN EN 50347	General-purpose three-phase induction motors with standard dimensions and output data
BS 46-1:1958	Keys and keyways and taper pins Specification

Key to symbols

Name	Symbols	Unit	Explanation
Torsional stiffness, dynamic	C_{Tdyn}	Nm/rad	For calculating torsional vibration
Excitation frequency	f_{err}	Hz	Excitation frequency of motor or driven machine
Moment of inertia	J	kgm^2	Moment of inertia of coupling
Axial misalignment	ΔK_a	mm	Axial misalignment of the coupling halves
Radial misalignment	ΔK_r	mm	Radial misalignment of the coupling halves
Angular misalignment	ΔK_w	°	Angular misalignment of the coupling halves
Service factor	FB		Factor expressing the real coupling load as a ratio of the nominal coupling load
Frequency factor	FF		Factor expressing the frequency dependence of the fatigue torque load
Temperature factor	FT		Factor taking into account the reduction in strength of flexible rubber materials at a higher temperature
Weight	m	kg	Weight of the coupling
Rated speed	n_N	rpm	Coupling speed
Maximum coupling speed	n_{Kmax}	rpm	Maximum permissible coupling speed
Rated power	P_N	kW	Rated output on the coupling, usually the output of the driven machine
Rated torque	T_N	Nm	Rated torque as nominal load on the coupling
Fatigue torque	T_W	Nm	Amplitude of the dynamic coupling load
Maximum torque	T_{max}	Nm	More frequently occurring maximum load, e.g. during starting
Overload torque	T_{OL}	Nm	Very infrequently occurring maximum load, e.g. during short circuit or blocking conditions
Rated coupling torque	T_{KN}	Nm	Torque which can be transmitted as static torque by the coupling over the period of use.
Maximum coupling torque	T_{Kmax}	Nm	Torque which can be frequently transmitted (up to 25 times an hour) as maximum torque by the coupling.
Coupling overload torque	T_{KOL}	Nm	Torque which can very infrequently be transmitted as maximum torque by the coupling.
Fatigue coupling torque	T_{KW}	Nm	Torque amplitude which can be transmitted by the coupling as dynamic torque at a frequency of 10 Hz over the period of use.
Resonance factor	V_R		Factor specifying the torque increase at resonance
Temperature	T_a	°C	Ambient temperature of the coupling in operation
Damping coefficient	Ψ	psi	Damping parameter

SELECTION OF THE COUPLING SERIES

E

The coupling series is frequently determined by the driven machine and the design of the drive train. Common selection criteria are listed below and assigned to coupling properties, which are used to select the coupling series. Additionally, the price of the coupling and availability are important criteria for determining the coupling series to be used.

The FLUDEX series operates positively and transmits the torque with the aid of a flowing oil or water filling.

FLUDEX couplings are used to reduce starting and/or overload torques. During starting, the motor may, for example, run up within a very short time; because of the FLUDEX coupling, the drive train with the driven machine may accelerate after a delay and without increased torque load.

The FLUDEX coupling cannot compensate for shaft misalignment and is therefore designed in combination with a displacement coupling, a cardan shaft or a belt drive. The displacement coupling may be selected in accordance with the criteria described below.

Selection criteria

	Torque range Rated coupling torque T_{KN}	Speed range Peripheral speed $v_{max} = DA \cdot n_{max}/19100$	Torsional stiffness torsionally rigid	torsionally flexible	Highly flexible	Operating temperature range
N-ZAPEX	1420 ... 10000000 Nm	60 m/s	■	–	–	-30 ... +80 °C
N-ARPEX	350 ... 2000000 Nm	110 m/s	■	–	–	-60 ... +280 °C
N-EUPEX	12 ... 93500 Nm	36 m/s	–	■	–	-60 ... +100 °C
N-EUPEX DS	19 ... 21200 Nm	36 m/s	–	■	–	-30 ... +80 °C
RUPEX	120 ... 1690000 Nm	60 m/s	–	■	–	-60 ... +100 °C
BIPEX	21 ... 5100 Nm	40 m/s	–	■	–	-50 ... +100 °C
ELPEX-B	57 ... 19000 Nm	45 m/s	–	–	■	-50 ... +70 °C
ELPEX-S	200 ... 63000 Nm	66 m/s	–	–	■	-40 ... +80 °C
ELPEX	1600 ... 90000 Nm	60 m/s	–	–	■	-40 ... +80 °C

Typical coupling solutions for different example applications

The specified application factors are recommendations; regulations, rules and practical experience take priority as assessment criteria.
No application factor need be taken into account with FLUDEX couplings.

In the case of highly flexible couplings of the ELPEX, ELPEX-S and ELPEX-B series, deviating application factors are stated in the product descriptions.
FLUDEX couplings are mostly mounted on the high-speed gear shaft.

Example applications	Application factor FB
Electric motor without gear unit	
Centrifugal pumps	1.0
Piston pumps	1.5
Vacuum pumps	1.5
Fans with T_N less than 75 Nm	1.5
Fans with T_N from 75 to 750 Nm	1.75
Fans with T_N larger than 750 Nm	1.75
Blowers	1.5
Frequency converters / generators	1.25
Reciprocating compressors	1.75
Screw-type compressors	1.5
Internal-combustion engine without gear unit	
Generators	1.75
Pumps	1.5
Fans	1.75
Hydraulic pumps, excavators, construction machines	1.5
Compressors / screw-type compressors	1.5
Agricultural machinery	1.75
Other	
Turbine gear units	1.5
Hydraulic motor - gear unit	1.25
Electric motor with gear unit	
Chemical industry	
Extruders	1.5
Pumps - centrifugal pumps	1.0
Pumps - piston pumps	1.75
Pumps - plunger pumps	1.5
Reciprocating compressors	1.75
Calenders	1.5
Kneaders	1.75
Cooling drums	1.25
Mixers	1.25
Stirrers	1.25
Toasters	1.25
Drying drums	1.25
Centrifuges	1.25
Crushers	1.5
Power generation and conversion	
Compressed air, reciprocating compressors	1.75

Example applications	Application factor FB
Compressed air, screw-type compressors	1.25
Air - Blowers	1.5
Air - Cooling tower fans	1.5
Air - Turbine blowers	1.5
Generators, converters	1.25
Welding generators	1.25
Metal production, iron and steel works	
Plate tilters	1.5
Ingot pushers	1.75
Slabbing mill	1.75
Coiling machines	1.5
Roller straightening machines	1.5
Roller tables	1.75
Shears	1.75
Rollers	1.75
Metal working machines	
Plate bending machines	1.5
Plate straightening machines	1.5
Hammers	1.75
Planing machines	1.75
Presses, forging presses	1.75
Shears	1.5
Grinding machines	1.25
Punches	1.5
Machine tools: Main drives	1.5
Machine tools: Auxiliary drives	1.25
Food industry	
Filling machines	1.25
Kneading machines	1.5
Mashers	1.5
Sugar cane production	1.5
Production machines	
Construction machines, hydraulic pumps	1.25
Construction machines, traversing gears	1.5
Construction machines, suction pumps	1.5
Construction machines, concrete mixers	1.5
Printing machines	1.25
Woodworking - barking drums	1.5
Woodworking - planing machines	1.5

Example applications	Application factor FB
Woodworking - reciprocating saws	1.5
Grinding machines	1.5
Textile machines - winders	1.5
Textile machines - printing machines	1.5
Textile machines - tanning vats	1.5
Textile machines - shredders	1.5
Textile machines - looms	1.5
Packaging machines	1.5
Brick molding machines	1.75
Transport and logistics	
Passenger transport - elevators	1.5
Passenger transport - escalators	1.5
Conveyor systems - bucket elevators	1.5
Conveyor systems - hauling winches	1.5
Conveyor systems - belt conveyors	1.5
Conveyor systems - endless-chain conveyors	1.5
Conveyor systems - circular conveyors	1.5
Conveyor systems - screw conveyors	1.5
Conveyor systems - inclined hoists	1.5
Crane traversing gear	1.5
Hoisting gear	1.5
Crane lifting gear	2.0
Crane traveling gear	1.5
Crane slewing gear	1.5
Crane fly jib hoists	1.5
Cable railways	1.5
Drag lifts	1.5
Winches	1.5
Cellulose and paper	
Paper-making machines, all	1.5
Pulper drives	1.5
Cement industry	
Crushers	1.75
Rotary furnaces	1.5
Hammer mills	1.75
Ball mills	1.75
Pug mills	1.75
Mixers	1.5
Pipe mills	1.5
Beater mills	1.75
Separators	1.5
Roller presses	1.75

SELECTION OF THE COUPLING SIZE

E

The torque load of the coupling must be determined from the output of the driven machine and the coupling speed.

Rated coupling load $T_N = 9550 \times P_N / n_N$
(T_N in Nm; P_N in kW; n_N in rpm)

The rated coupling load obtained in this way must be multiplied by factors and compared with the rated coupling torque. An ideal but expensive method is to measure the torque characteristic on the coupling. For this, Flender offers special adapters fitted with torque measuring devices.

The rated coupling torque T_{KN} is the torque which can be transmitted by the coupling over an appropriate period of use if the load is applied to the coupling purely statically at room temperature.

Application factors are to express the deviation of the real coupling load from the "ideal" load condition.

Coupling load in continuous operation

The operating principles of the driving and driven machines are divided into categories and the application factor FB derived from these in accordance with DIN 3990-1.

Application factor for N-EUPEX, N-EUPEX-DS, RUPEX, BIPEX, ELPEX-B, N-ARPEX, ARPEX, N-ZAPEX and FLUDEX

Application factor FB

Torque characteristic of the driving machine	Torque characteristic of the driven machine: uniform	uniform with moderate shock loads	non uniform	very rough
uniform	1.0	1.25	1.5	1.75
uniform with moderate shock loads	1.25	1.5	1.75	2.0
non uniform	1.5	1.75	2.0	2.5

Examples of torque characteristic of driving machines:

- uniform: Electric motors with soft starting, steam turbines
- uniform with moderate shock loads: Electric motors without soft starting, hydraulic motors, gas and water turbines
- non uniform: Internal-combustion engines

Examples of torque characteristic in driven machines:

- uniform: Generators, centrifugal pumps for light fluids
- uniform with moderate shock loads: Centrifugal pumps for viscous fluids, elevators, machine tool drives, centrifuges, extruders, blowers, crane drives
- non uniform: Excavators, kneaders, conveyor systems, presses, mills
- very rough: Crushers, excavators, shredders, iron/smelting machinery

Temperature factor FT

Coupling	Elastomer material	Low temperature °C	Temperature T_a on the coupling: under -30 °C	-30 °C up to 50 °C	up to 60 °C	up to 70 °C	up to 80 °C	up to 90 °C	up to 100 °C	up to 110 °C	up to 120 °C
N-EUPEX	NBR	-50	1.0	1.0	1.0	1.0	1.0	–	–	–	–
N-EUPEX	NR	-60	1.0	1.0	–	–	–	–	–	–	–
N-EUPEX	HNBR	-10	–	1.0	1.0	1.0	1.0	1.25	1.25	–	–
N-EUPEX	TPU	-50	1.0	1.0	1.05	1.10	1.15	–	–	–	–
N-EUPEX DS	NBR	-30	–	1.0	1.0	1.0	1.0	–	–	–	–
RUPEX	NBR	-50	1.0	1.0	1.0	1.0	1.0	–	–	–	–
RUPEX	NR	-60	1.0	1.0	–	–	–	–	–	–	–
RUPEX	HNBR	-10	–	1.0	1.0	1.0	1.0	1.25	1.25	–	–
BIPEX	TPU	-50	1.0	1.0	1.0	1.0	1.0	1.0	1.0	1.3	1.5
ELPEX	NR	-40	1.1	1.0	1.25	1.40	1.60	–	–	–	–
ELPEX-B	NR	-50	1.1	1.0	–	–	–	–	–	–	–
ELPEX-B	CR	-15	–	1.0	1.0	1.0	–	–	–	–	–
ELPEX-S SN, NN, WN	NR	-40	1.1	1.0	1.25	1.40	1.60	–	–	–	–

NR = natural rubber, natural-synthetic rubber mixture
NBR = nitril-butadiene-rubber (Perbunan)
HNBR = hydrated acrylonitrile butadiene rubber
CR = chloroprene rubber (FRAS fire-resistant and anti-static)
TPU = polyurethane

Coupling size $T_{KN} \geqslant T_N \cdot FB \cdot FT$

In the case of ARPEX and N-ZAPEX coupling types, no temperature factor (FT = 1.0) need be taken into account.

Coupling load at maximum and overload conditions

The maximum torque is the highest load acting on the coupling in normal operation.
Maximum torques at a frequency of up to 25 times an hour are permitted and must be lower than the maximum coupling torque. Examples of maximum torque conditions are: Starting operations, stopping operations or usual operating conditions with maximum load.

$T_{Kmax} \geqslant T_{Max} \cdot FT$

Overload torques are maximum loads which occur only in combination with special, infrequent operating conditions. Examples of overload torque conditions are: Motor short circuit, emergency stop or blocking because of component breakage. Overload torques at a frequency of once a month are permitted and must be lower than the maximum overload torque of the coupling. The overload condition may last only a short while, i.e. fractions of a second.

$T_{KOL} \geqslant T_{OL} \cdot FT$

Coupling load due to dynamic torque load

Applying the frequency factor FF, the dynamic torque load must be lower than the coupling fatigue torque.

Dynamic torque load

$T_{KW} \geqslant T_{W} \cdot FF$

Frequency of the dynamic torque load
$f_{err} \leqslant 10$ Hz frequency factor FF = 1.0

Frequency of the dynamic torque load
$f_{err} > 10$ Hz frequency factor FF = $\sqrt{(f_{err}/10\ Hz)}$

For the N-ZAPEX and ARPEX series, the frequency factor is always FF = 1.0.

Checking the maximum speed

For all load situations $n_{Kmax} \geqslant n_{max}$

The maximum permissible speeds can be found in the type tables. For N-ZAPEX couplings, the permissible speeds must be reduced depending on the misalignment, in accordance with the following table.

	Speed correction factor FN													
Misalignment angle	0.0	0.1	0.2	0.3	0.4	0.5	0.6	0.7	0.8	0.9	1.0	1.1	1.2	1.3
Correction factor	1.00	1.00	1.00	0.84	0.72	0.59	0.50	0.42	0.36	0.32	0.28	0.24	0.22	0.20

$n_{perm} = FN \cdot n_{max}$

SELECTION OF THE COUPLING SIZE

Checking permitted shaft misalignment

For all load situations, the actual shaft misalignment must be less than the permitted shaft misalignment.

Checking bore diameter, mounting geometry and coupling design

The check must be made on the basis of the dimension tables. The maximum bore diameter applies to parallel keyways to DIN 6885. For other keyway geometries, the maximum bore diameter can be reduced.

On request, couplings with adapted geometry can be provided.

Coupling behavior under overload conditions

The N-ZAPEX, N-ARPEX, ARPEX, N-EUPEX, RUPEX and BIPEX coupling series can withstand overloads until the breakage of metal parts. These coupling series are designated as fail-safe.
The N-EUPEX DS, ELPEX-B, ELPEX-S and ELPEX coupling series throw overload. The elastomer element of these couplings is irreparably damaged without damage to metal parts when subjected to excessive overload.

These coupling series are designated as non-fail-safe. These types that fail can be fitted with a so-called fail-safe device. This additional component enables emergency operation, even after the rubber element of the coupling has been irreparably damaged.

Checking shaft-hub connection

The torques specified in the tables of power ratings data of the coupling series do not necessarily apply to the shaft-hub connection. Depending on the shaft-hub connection, proof of form stability is required. Flender recommends obtaining proof of form strength by using calculation methods in accordance with the current state of the art.

Shaft-hub connection	Suggestion for calculation method
Keyway connection to DIN 6885-1	DIN 6892
Shrink fit	DIN 7190
Spline to DIN 5480	
Bolted flange connection	VDI 2230
Flange connection with close-fitting bolts	

Fitting recommendations for the shaft-hub connection are given in the **Appendix**.

The coupling hub is frequently fitted flush with the shaft end face. If the shaft projects, the risk of collision with other coupling parts must be checked. If the shaft is set back, in addition to the load-bearing capacity of the shaft-hub connection, the correct positioning of the hub must be ensured as well. If the bearing hub length is insufficient, restorative forces may cause tilting movements and so wear to and impairment of the axial retention. Also, the position of the set screw to be positioned on sufficient shaft or parallel key material must be noted.

Checking low temperature and chemically aggressive environment

The minimum permitted coupling temperature is specified in the Temperature factor FT table. In the case of chemically aggressive environments, please consult the manufacturer.

FEATURES OF THE STANDARD TYPE

Couplings	Features of the standard type
All coupling series except ARPEX clamping hubs and FLUDEX with keyway to ASME B17.1	Bore tolerance H7
N-ARPEX and ARPEX clamping hubs	Bore tolerance G6 (suitable for shaft tolerance h6)
FLUDEX couplings with keyway to ASME B17.1	Hollow shafts: bore tolerance K7
	other parts: bore tolerance M7
All coupling series with bore diameter - imperial	Parallel keyway to ASME B17.1
Bore diameter metric in the case of N-ZAPEX, N-ARPEX and ARPEX coupling series as well as coupling hubs with applied brake disks or brake drums of the N-EUPEX and RUPEX series	Parallel keyway to DIN 6885-1 keyway width P9
Bore diameter metric in the case of the N-EUPEX, RUPEX, BIPEX, ELPEX-S, ELPEX-B, ELPEX, FLUDEX coupling series	Parallel keyway to DIN 6885-1 keyway width JS9
All coupling series except FLUDEX	Axial locking by means of set screw
FLUDEX coupling series	Axial lock by means of set screw or end washer
All coupling series	Balancing in accordance with half parallel key standard
N-ZAPEX, N-ARPEX, ARPEX, N-EUPEX, RUPEX, BIPEX, ELPEX-S, ELPEX-B and ELPEX coupling series	Balancing quality G16
FLUDEX coupling series	Balancing quality G6.3
All series	Unpainted
All series	Preservation with cleaning emulsion
FLUDEX couplings	Fuse 140 °C

Configurator

The article number can be obtained with the help of the Configurator. The coupling can be selected in a product configurator and specified using selection menus.

The Configurator is available under **flender.com**.

The coupling can be selected via "Technical selection" (technical selection) or via "Direct selection" (via article no.).

HIGHLY FLEXIBLE COUPLINGS ELPEX-B SERIES

General	**10/3**
Benefits	10/3
Application	10/3
Design and configurations	10/4
Technical specifications	10/6
Type EBWN	**10/7**
Type EBWT	**10/8**
Type EBWZ	**10/10**
Spare and wear parts	**10/12**

10

ELPEX-B
FLENDER

GENERAL

ELPEX-B couplings are highly flexible and free of torsional backlash. Because of their low torsional stiffness and damping capacity, ELPEX-B couplings are especially suitable for coupling machines with a highly non uniform torque pattern. ELPEX-B couplings are also suitable for connecting machines with high shaft misalignment.

Standard ELPEX-B coupling types are designed as shaft-shaft connections. Application-related types can be implemented on request.

Coupling suitable for use in potentially explosive atmospheres.
Complies with the current ATEX Directive for:

- II 2G Ex h IIC T6 ... T5 Gb X
- II 2D Ex h IIIC T85 °C ... 100 °C Db X
- I M2 Ex h Mb X

10

Benefits

The ELPEX-B coupling is suitable for horizontal and vertical mounting positions or mounting positions at any required angle.

The elastic tire is slit at the circumference and can be changed without having to move the coupled machines.

The elastic tire is fitted without backlash and gives the coupling linear torsional stiffness, thus the torsional rigidity remains constant as the load on the coupling increases.

The ELPEX-B coupling is especially suitable for reversing operation or operation with changing directions of load. The coupling parts can be arranged as required on the shafts to be connected.

If the elastic tire is irreparably damaged or worn, the metal parts can rotate freely against one another because they are not in contact with one another.

Application

The ELPEX-B coupling is available as a catalog standard in 15 sizes with a rated torque of between 57 Nm and 19000 Nm. The coupling can be fitted with elastic tires made of natural rubber for ambient temperatures of -50 °C to +55 °C and with elastic tires made of chloroprene rubber for -15 °C to +70 °C.

The chloroprene rubber tire is marked FRAS, "Fire-resistant and Antistatic".

GENERAL

Design and configurations

The ELPEX-B coupling's transmission characteristic is determined essentially by the elastic tire. The elastic tire is manufactured from a natural rubber or a chloroprene rubber mixture with a multiply fabric insert. The elastic tire is fastened to the hubs with bolts and two clamping rings.

In type EBWT, the shaft-hub connection is achieved with Taper clamping bushes, in type EBWN with finish-drilled hubs and parallel keys. The type EBWZ connects the machine shafts additionally via a detachable adapter.

Metal part materials

- EN-GJL-250 grey cast iron, EN-GJS-400 spheroidal graphite cast iron or steel

Elastic tire material

Material	Hardness	Marking	Ambient temperature
Natural rubber	70 ShoreA	48	-50 ... +55 °C
Chloroprene rubber	70 ShoreA	068 FRAS	-15 ... +70 °C

ELPEX-B coupling types

Type	Description
EBWN	Coupling as a shaft-shaft connection with drilled and grooved hubs
EBWT	Coupling as a shaft-shaft connection with Taper clamping bushes
EBWZ	Coupling as shaft-shaft connection with detachable adapter

Further application-specific coupling types are available; dimension sheets for and information on these are available on request.

The coupling types set up for shaft-hub connections with Taper clamping bushes are designated as follows:

- Variant A: Coupling with part 3 – part 3
- Variant B: Coupling with part 4 – part 4
- Variant AB: Coupling with part 3 – part 4

In the case of part 3, the Taper clamping bush is screwed in from the shaft end face side. The coupling half must be fitted before the machines to be connected are pushed together.

In the case of part 4, the Taper clamping bush is screwed in from the machine-housing side. If there is insufficient room, the Taper clamping bushes cannot be fitted from this side. Besides fitting space for the Taper clamping bush bolts, space for the fitting tool (offset screwdriver) must be taken into account.

In the case of coupling type EBWT, part 3 and part 4 can be combined as required. Furthermore, the variant with a Taper clamping bush can be combined with the finish-drilled hub.

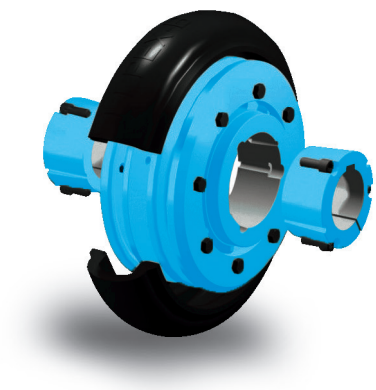

Unfitted coupling

Fitted coupling
(shown without connecting shafts)

Fitted elastic tire

The elastic tire can simply be slipped over the hub parts. The elastic tire is held firmly in place by fitting the clamping ring. The connection transmits the torque by frictional engagement.

GENERAL

Technical specifications

Power ratings								
Size	Rated torque	Maximum torque	Fatigue torque	Maximum speed	Dynamic torsional stiffness	Permitted shaft misalignment at n = 1500 rpm [1]		
						Axial	Radial	Angle
	T_{KN} Nm	T_{Kmax} Nm	T_{KW} Nm	n_{Kmax} rpm	C_{Tdyn} Nm/rad	ΔK_a mm	ΔK_r mm	ΔK_w Degree
105	**57**	114	17	5400	285	1.3	1.1	4
135	**155**	310	46	5400	745	1.7	1.3	4
165	**250**	500	75	4800	1500	2	1.6	4
190	**350**	700	105	4300	2350	2.3	1.9	4
210	**600**	1200	180	3700	3600	2.6	2.1	4
235	**800**	1600	240	3600	5200	3	2.4	4
255	**1000**	2000	300	3100	7200	3.3	2.6	4
280	**1350**	2700	400	2800	10000	3.7	2.9	4
315	**1900**	3800	570	2500	17000	4	3.2	4
360	**3550**	7100	1050	2200	28000	4.6	3.7	4
400	**4350**	8700	1300	1900	44500	5.3	4.2	4
470	**8100**	16200	2400	1800	78500	6	4.8	4
510	**11100**	22200	3300	1600	110000	6.6	5.3	4
560	**14800**	29000	4450	1300	160000	7.3	5.8	4
630	**19000**	38000	5700	1200	200000	8.2	6.6	4

For coupling fatigue torque:
$T_{KW} = 0{,}3 \cdot T_{KN}$, where $T_N > T_W$ must be adhered to.
$T_{Kmax} = 2 \cdot T_{KN}$

Torsional stiffness and damping

The damping coefficient is Ψ = 0.9

The technical data for the elastic tires made of natural rubber and chloroprene rubber are virtually identical.

Torsional stiffness depends on the ambient temperature and the frequency and amplitude of the torsional vibration excitation. More precise torsional stiffness and damping parameters on request.

With flexible couplings the manufacturing process of the rubber elements and their aging primarily influence the stiffness value C_{Tdyn}. For this reason calculation must be made with a tolerance for the dynamic stiffness of ± 20 %. The specified damping coefficient Ψ is a minimum value with the result that the damping performance of the coupling corresponds at least to the specified value.

Permitted shaft misalignment

The permitted shaft misalignment depends on the operating speed. As the speed increases, lower shaft misalignment values are permitted. The correction factors for different speeds are specified in the following table. The maximum speed for the respective coupling size must be noted.

$\Delta K_{perm} = \Delta K_{1500} \cdot FKV$

	Speed in rpm			
	500	1000	1500	3000
Correction factor FKV	1.2	1.1	1.0	0.7

The restorative force (including in the axial direction) depends on speed, system torque and shaft misalignment. Restorative forces on request.

[1] The maximum speed for the respective type must be noted. For additional information on the allowable shaft misalignment, please refer to the operating instructions.

TYPE EBWN

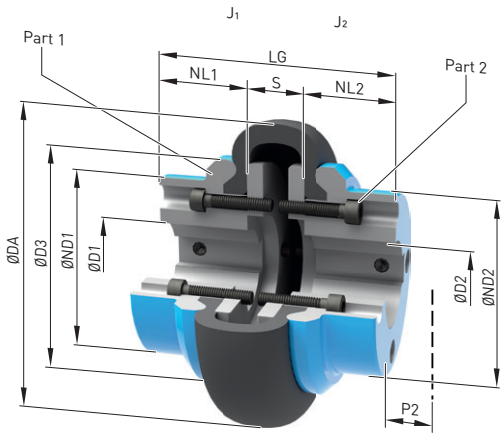

Sizes 105 ... 165

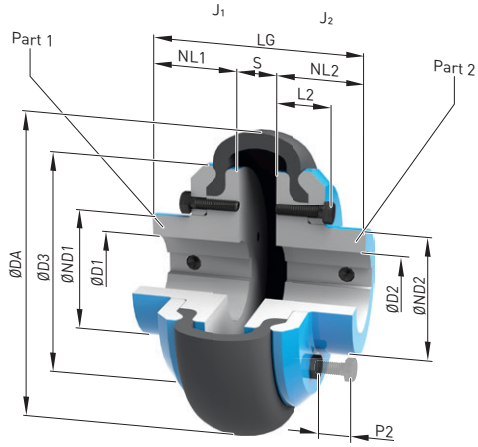

Sizes 190 ... 630

Size	Rated torque T_{KN} Nm	Dimensions in mm D1/D2 Keyway DIN 6885-1 min.	max.	DA	ND1/ ND2 [2]	NL1/ NL2	D3	L2	S	P2	LG	Mass moment of inertia J_1/J_2 kgm²	↗ Article no. [1]	Weight m kg
105	**57**	–	**38**	104	70	30	82	–	22	35	82	0,0011	**2LC0210-0AA**	2
135	**155**	–	**48**	134	80	40	100	–	25	35	105	0,0023	**2LC0210-1AA**	3,1
165	**250**	–	**50**	165	70	50	125	24	33	35	133	0,0052	**2LC0210-2AA**	4,8
190	**350**	–	**55**	187	77	55	145	35	23	35	133	0,0094	**2LC0210-3AA**	6,5
210	**600**	–	**70**	211	98	65	168	39	25	35	155	0,019	**2LC0210-4AA**	9,7
235	**800**	–	**75**	235	109	70	188	44	27	35	167	0,034	**2LC0210-5AA**	14
255	**1000**	–	**90**	254	128	75	216	45	27	35	177	0,057	**2LC0210-6AA**	19
280	**1350**	–	**100**	280	140	80	233	46	25	35	185	0,083	**2LC0210-7AA**	23
315	**1900**	–	**110**	314	155	90	264	49	29	40	209	0,15	**2LC0210-8AA**	32
360	**3550**	–	**135**	359	200	100	311	53	32	40	232	0,32	**2LC0211-0AA**	51
400	**4350**	–	**150**	402	216	125	346	61	30	50	280	0,55	**2LC0211-1AA**	73
470	**8100**	–	**180**	470	260	140	398	68	46	50	326	1,1	**2LC0211-2AA**	110
510	**11100**	–	**200**	508	290	150	429	73	48	50	348	1,8	**2LC0211-3AA**	143
560	**14800**	–	**220**	562	320	165	474	82	55	60	385	2,9	**2LC0211-4AA**	194
630	**19000**	80	**250**	629	355	195	532	82	59	60	449	4,9	**2LC0211-5AA**	260

Configurable variants [1]

- ØD1 Without finished bore
  With finished bore
- ØD2 Without finished bore
  With finished bore

Notes

- Weight and mass moments of inertia apply to maximum bore diameters.
- The article no. applies to elastic tires made of natural rubber.
- P2 = fitting space for dismounting the elastic tire

Ordering example

- ELPEX-B EBWN coupling, size 210
- Part 1: Bore 40H7mm, keyway to DIN 6885-1 and set screw
- Part 2: Bore 45H7 mm, keyway to DIN 6885-1 and set screw

Article no.: 2LC0210-4AA99-0AA0-Z L0W+M1A

[1] To identify complete item numbers specifying the available finish boring options and – if necessary – further order options, please use our configurators on **flender.com**.

[2] The hub diameters ND1/ ND2 can be smaller for small bores.

↗ For online configuration on **flender.com**, click on the item no.

TYPE EBWT

Sizes 105 ... 165

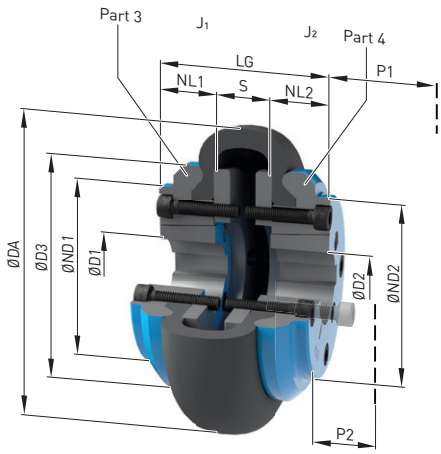

Variant AB

Sizes 190 ... 560

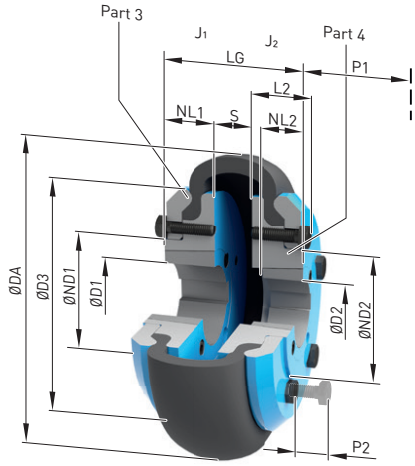

Variant AB

10

Sizes 105 ... 165

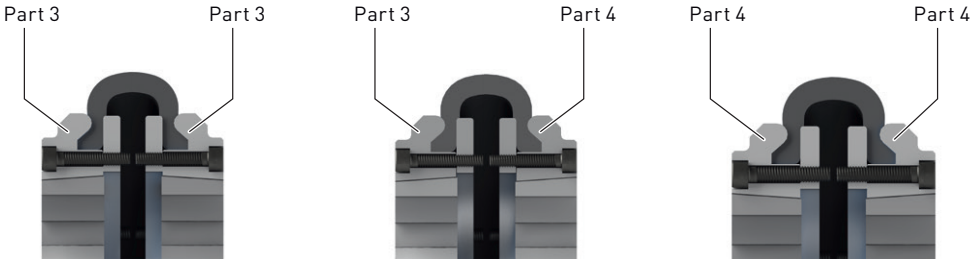

Variant A | Variant AB | Variant B

Sizes 190 ... 560

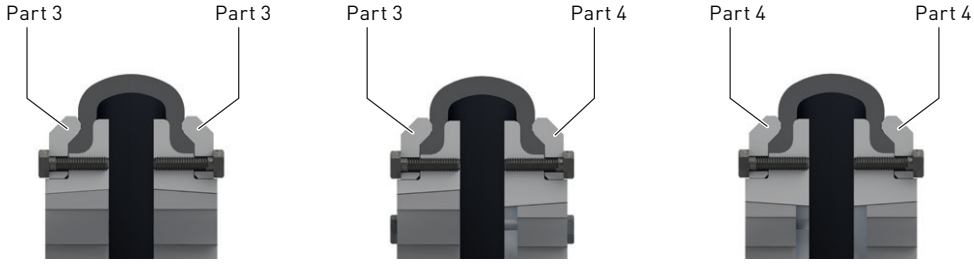

Variant A | Variant AB | Variant B

Part 3: Screw connection for Taper clamping bush from the shaft end face side

Part 4: Screw connection for Taper clamping bush from the machine-housing side

Size	Rated torque T_{KN} Nm	Part no.	Taper Clamping Bush Size	Dimensions in mm Bohrung mit Nut nach DIN 6885-1 D1/ D2 min.	max.	DA	ND1/ ND2	NL1/ NL2	D3	L2	S	P1	P2	LG	Mass moment of inertia J_1/J_2 kgm²	↗ Article no. [1] Type A	B	AB	Weight m kg
105	**57**	3	1008	10	**25**	104	–	22	82	–	22	29	35	66	0,00098	**2LC0210-0AB**	**2LC0210-0AC**	**2LC0210-0AD**	1,9
		4																	
135	**155**	3	1210	11	**32**	134	80	25	100	–	25	38	35	75	0,002	**2LC0210-1AB**	**2LC0210-1AC**	**2LC0210-1AD**	2,8
		4																	
165	**250**	3	1610	14	**42**	165	70	25	125	24	33	38	35	83	0,0049	**2LC0210-2AB**	**2LC0210-2AC**	**2LC0210-2AD**	4,2
		4																	
190	**350**	3	2012	14	**50**	187	81	32	145	35	23	42	35	87	0,0093	**2LC0210-3AB**	**2LC0210-3AC**	**2LC0210-3AD**	6,3
		4	1610	14	**42**			25				38							
210	**600**	3	2517	16	**60**	211	98	45	168	39	25	48	35	115	0,018	**2LC0210-4AB**	**2LC0210-4AC**	**2LC0210-4AD**	9,5
		4	2012	14	**50**			32				42		89					
235	**800**	3	2517	16	**60**	235	109	46	188	44	27	48	35	119	0,034	**2LC0210-5AB**	**2LC0210-5AC**	**2LC0210-5AD**	14
		4																	
255	**1000**	3	3020	25	**75**	254	128	51	216	45	27	55	35	129	0,057	**2LC0210-6AB**	**2LC0210-6AC**	**2LC0210-6AD**	19
		4	2517	16	**60**			45				48		117					
280	**1350**	3	3020	25	**75**	280	140	52	233	46	25	55	35	129	0,083	**2LC0210-7AB**	**2LC0210-7AC**	**2LC0210-7AD**	23
		4																	
315	**1900**	3	3525	35	**100**	314	155	66	264	49	29	67	40	161	0,15	**2LC0210-8AB**	**2LC0210-8AC**	**2LC0210-8AD**	32
		4	3020	25	**75**			51				55		131					
360	**3550**	3	3525	35	**100**	359	200	65	311	53	32	67	40	162	0,32	**2LC0211-0AB**	**2LC0211-0AC**	**2LC0211-0AD**	52
		4																	
400	**4350**	3	4030	40	**115**	402	216	77	346	61	30	80	50	184	0,54	**2LC0211-1AB**	**2LC0211-1AC**	**2LC0211-1AD**	71
		4																	
470	**8100**	3	4535	55	**125**	470	260	89	398	68	46	89	50	224	1	**2LC0211-2AB**	**2LC0211-2AC**	**2LC0211-2AD**	113
		4																	
510	**11100**	3	4535	55	**125**	508	290	89	429	73	48	89	50	226	1,7	**2LC0211-3AB**	**2LC0211-3AC**	**2LC0211-3AD**	145
		4																	
560	**14800**	3	5040	70	**125**	562	320	102	474	82	55	92	60	259	2,8	**2LC0211-4AB**	**2LC0211-4AC**	**2LC0211-4AD**	204
		4																	

Configurable variants [1]

- ØD1 Without finished bore
  With finished bore
- ØD2 Without finished bore
  With finished bore

Notes

- Weights and mass moments of inertia apply to couplings with Taper clamping bushes with maximum bore diameter.
- The article no. applies to elastic tires made of natural rubber.
- P1 = fitting space for offset screwdriver and ejector bolt for dismounting the Taper clamping bush
- P2 = fitting space for dismounting the elastic tire.

Ordering example

- ELPEX-B EBWT coupling, size 210, variant AB, including Taper clamping bushes
- Part 3: with Taper clamping bush, bore 60 mm
- Part 4: with Taper clamping bush, bore 40 mm

Article no.: 2LC0210-4AD99-0AA0-Z L1E+M0W

[1] To identify complete item numbers specifying the available finish boring options and – if necessary – further order options, please use our configurators on **flender.com**.

↗ For online configuration on **flender.com**, click on the item no.

TYPE EBWZ

Sizes 190 ... 470

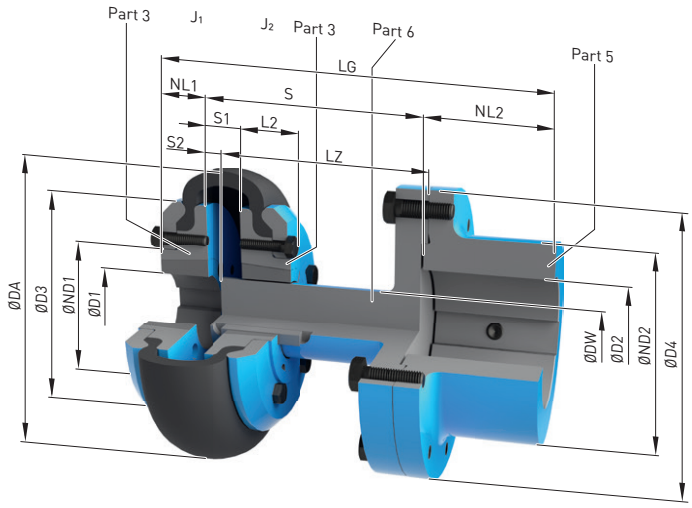

Variant A

10

Sizes 105 ... 165

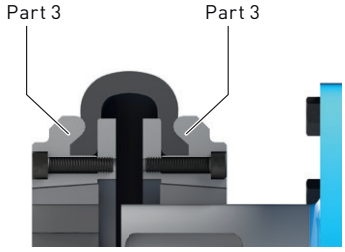

Variant A

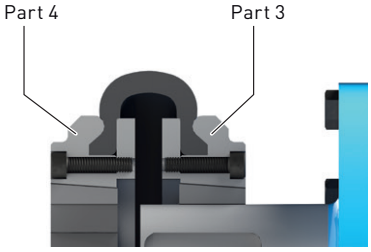

Variant B

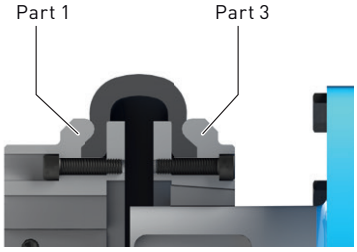

Variant C

Sizes 190 ... 470

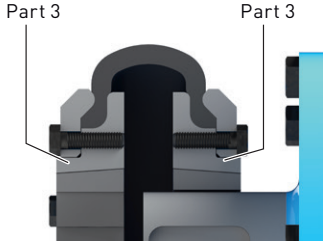

Variant A

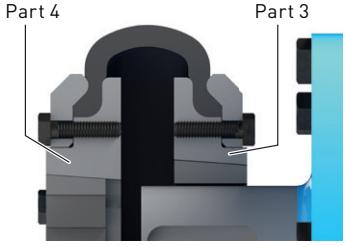

Variant B

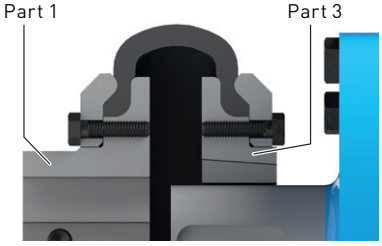

Variant C

Part 3: Screw connection for Taper clamping bush from the shaft end face side

Part 4: Screw connection for Taper clamping bush from the machine-housing side

Size	Rated torque	Dimensions in mm												Mass moment of inertia	↗ Article no. [1]			Weight
	T_{KN}	D2 Keyway DIN 6885-1		DA	ND2	D4	DW	NL2	LZ	S		S1	S2	J_2	Type			m_2
	Nm	min.	max.							min.	max.		min.	kgm²	A	B	C	kg
105	57	–	48 [2]	104	70	95	25	45	93	100	113	22	9	0,003	2LC0210-0AG	2LC0210-0AH	2LC0210-0AJ	2,9
									133	140	153			0,0041				3,1
135	155	–	60 [2]	134	90	125	32	50	93	100	116	25	9	0,0081	2LC0210-1AG	2LC0210-1AH	2LC0210-1AJ	5
									133	140	156			0,0096				5,3
165	250	–	60 [2]	165	90	125	32	50	93	100	124	33	9	0,011	2LC0210-2AG	2LC0210-2AH	2LC0210-2AJ	5,9
									133	140	164			0,013				6,1
190	350	–	80	187	125	180	48	80	93.5	100	114	23	9	0,045	2LC0210-3AG	2LC0210-3AH	2LC0210-3AJ	14
									133.5	140	154			0,045				14
									173.5	180	194			0,051				15
210	600	–	80	211	125	180	48	80	133.5	140	156	25	9	0,055	2LC0210-4AG	2LC0210-4AH	2LC0210-4AJ	16
									173.5	180	196			0,061				17
235	800	–	80	235	125	180	48	80	133.5	140	158	27	9	0,07	2LC0210-5AG	2LC0210-5AH	2LC0210-5AJ	18
									173.5	180	198			0,077				19
255	1000	–	100	254	150	225	60	100	133.5	140	158	27	9	0,16	2LC0210-6AG	2LC0210-6AH	2LC0210-6AJ	29
									173.5	180	198			0,16				30
280	1350	–	100	280	150	225	60	100	133.5	140	156	25	9	0,18	2LC0210-7AG	2LC0210-7AH	2LC0210-7AJ	31
									173.5	180	196			0,18				32
315	1900	46	110	314	165	250	80	110	134.5	140	160	29	9	0,32	2LC0210-8AG	2LC0210-8AH	2LC0210-8AJ	44
									174.5	180	200			0,32				46
360	3550	46	110	359	165	250	80	110	134.5	140	163	32	9	0,49	2LC0211-0AG	2LC0211-0AH	2LC0211-0AJ	54
									174.5	180	203			0,5				56
400	4350	51	130	402	180	280	90	120	223.5	230	250	30	10	0,87	2LC0211-1AG	2LC0211-1AH	2LC0211-1AJ	78
470	8100	51	140	470	200	315	100	140	207.5	214	250	46	10	1,6	2LC0211-2AG	2LC0211-2AH	2LC0211-2AJ	118

10

Configurable variants [1]

- ØD1 Without finished bore
  With finished bore
- ØD2 Without finished bore
  With finished bore
- S min. 100 mm
  140 mm
  180 mm

Notes

- Dimensions D1, ND1, NL1, J1, L2, D3 and fitting space for dismounting elastic tire and Taper clamping bush, see types EBWN or EBWT, **page 10/7** or **page 10/8**
- The article no. applies to elastic tires made of natural rubber.
- Mass moment of inertia J_2 and weight m_2 apply to the right coupling half with maximum bore diameter. For mass moment of inertia J_1 see types EBWN or EBWT, **page 10/7** or **page 10/8**. Weight m_1 of the left coupling half corresponds to half the weight m of types EBWN or EBWT, **page 10/7** or **page 10/8**.

Ordering example

- ELPEX-B EBWZ coupling, size 360
- variant C, for fitting length S min. = 190 mm
- Part 1: Bore 65H7 mm, keyway to DIN 6885-1 and set screw
- Part 5: Bore 70H7 mm, keyway to DIN 6885-1 and set screw

Article no.: 2LC0211-0AJ99-0AC0-Z L1F+M1G

[1] To identify complete item numbers specifying the available finish boring options and – if necessary – further order options, please use our configurators on **flender.com**.

[2] For bore diameters greater than the following values, the feather key must be at least 3 mm behind the shaft end. Size 105 D2 > 42 mm; size 135 and size 165 D2 > 59 mm

↗ For online configuration on **flender.com**, click on the item no.

SPARE AND WEAR PARTS

Elastic tire

Size	Article No. Natural rubber Identification 048	Weight kg	Chloroprene rubber Identification 068 FRAS	Weight kg
105	2LC0210-0WA00-0AA0	0,12	2LC0210-0WA00-0AA0-Z K01	0,12
135	2LC0210-1WA00-0AA0	0,27	2LC0210-1WA00-0AA0-Z K01	0,27
165	2LC0210-2WA00-0AA0	0,46	2LC0210-2WA00-0AA0-Z K01	0,46
190	2LC0210-3WA00-0AA0	0,6	2LC0210-3WA00-0AA0-Z K01	0,6
210	2LC0210-4WA00-0AA0	0,88	2LC0210-4WA00-0AA0-Z K01	0,88
235	2LC0210-5WA00-0AA0	1,1	2LC0210-5WA00-0AA0-Z K01	1,1
255	2LC0210-6WA00-0AA0	1,1	2LC0210-6WA00-0AA0-Z K01	1,1
280	2LC0210-7WA00-0AA0	1,6	2LC0210-7WA00-0AA0-Z K01	1,6
315	2LC0210-8WA00-0AA0	2,1	2LC0210-8WA00-0AA0-Z K01	2,1
360	2LC0211-0WA00-0AA0	2,6	2LC0211-0WA00-0AA0-Z K01	2,6
400	2LC0211-1WA00-0AA0	3,5	2LC0211-1WA00-0AA0-Z K01	3,5
470	2LC0211-2WA00-0AA0	6,1	2LC0211-2WA00-0AA0-Z K01	6,1
510	2LC0211-3WA00-0AA0	8,7	2LC0211-3WA00-0AA0-Z K01	8,7
560	2LC0211-4WA00-0AA0	12	2LC0211-4WA00-0AA0-Z K01	12
630	2LC0211-5WA00-0AA0	14	2LC0211-5WA00-0AA0-Z K01	14

Note

- The elastic tires are wear parts.
  The service life depends on the operating conditions.

HIGHLY FLEXIBLE COUPLINGS – ELPEX-S SERIES

General	**11/3**
Benefits	11/3
Application	11/3
Design and configurations	11/4
Function	11/6
Configuration	11/6
Technical specifications	11/8
Type ESN	**11/12**
Type ESNR	**11/14**
Type ESD	**11/16**
Type ESDR	**11/17**
Type ESNW	**11/18**
Type ESDW	**11/19**
Type EST	**11/20**
Spare and wear parts	**11/21**

ELPEX-S
FLENDER

GENERAL

Coupling suitable for use in potentially explosive atmospheres.
Complies with the current ATEX Directive for:

II 2G Ex h IIC T4 ... T3 Gb X

II 2D Ex h IIIC T120 °C ... 160 °C Db X

I M2 Ex h Mb X

(Type EST is not available in Ex version.)
ELPEX-S couplings are highly torsionally flexible and because of their low torsional stiffness and damping capacity are especially suitable for coupling machines with a highly non uniform torque pattern.
Standard ELPEX-S coupling types are designed as flange-shaft-connections or shaft-shaft connections. Application-related types can be implemented on request.

Benefits

The ELPEX-S coupling is suitable for horizontal and vertical mounting positions or mounting at any required angle. The coupling parts can be arranged as required on the shafts to be connected.

ELPEX-S couplings are especially suitable for reversing operation or operation with changing directions of load.

The rubber disk elements are fitted virtually without backlash and give the coupling linear torsional stiffness, i.e. the torsion stiffness remains constant even when the load on the coupling increases.

There are 4 different rubber element versions with different grades of torsional stiffness available for each size from stock.

On certain types the flexible rings can be changed without having to move the coupled machines.

If substantial overload occurs, the rubber disk element of the coupling is irreparably damaged, the coupling throws the load and thus limits the overload for particular operating conditions. The coupling can be inserted and fitted blind e.g. in a bell housing.

There are outer flanges with different connection dimensions available for each coupling size.

Application

The ELPEX-S coupling is available as a catalog standard in 12 sizes with rated torques of between 330 Nm and 63000 Nm.

The coupling is suitable for ambient temperatures of between -40 °C and +80 °C.

The ELPEX-S coupling is frequently used for diesel motor drives or reciprocating compressor drives.

Because the different rubber versions enable the torsional stiffness to be adjusted to meet requirements, the coupling is also suitable for drives which require a specific and preferably precalculated torsional vibration behavior setting.

GENERAL

Design and configurations

The rubber disk element is vulcanized onto a flange on the inside diameter. The flange can mount e.g. a Taper clamping bush or a hub. On its outer diameter the rubber disk element has driving teeth, which are inserted into the outer flange. The torque is transmitted positively between the rubber disk element and the outer flange.

In the type for shaft-shaft connection the outer flange is screwed to a flange hub mounted on a machine shaft.

Materials

	Type EST	Types ESN. and ESD.
Rubber disk element	EN-GJL-250 grey cast iron/ elastomer	EN-GJL-400 spheroidal graphite cast iron/elastomer
Hubs, part 1, part 2	Steel	Steel
Outer flange	Cast aluminum Zn10Si8Mg Sizes 680 and 770 of spheroidal graphite cast iron EN-GJS-500	Cast aluminum Zn10Si8Mg Sizes 680 and 770 of spheroidal graphite cast iron EN-GJS-500

Elastomer materials of the rubber disk element

Material/ description	Hardness ShoreA	Marking	Ambient temperature
Natural-synthetic rubber mixture	50 ° ... 55 °	WN	-40 °C ... +80 °C
	60 ° ... 65 °	NN	-40 °C ... +80 °C
	70 ° ... 75 °	SN	-40 °C ... +80 °C

11

ELPEX-S coupling types

Type	Description
ESN	Coupling with hub, long or short version
ESD	Coupling with hub, with two rubber disk elements
ESNR	Coupling with hub, rubber disk element radially dismountable
ESDR	Coupling with hub with two rubber disk elements; rubber disk elements radially dismountable
ESNW	Coupling designed as a shaft-shaft connection with a rubber disk element; rubber disk element radially dismountable
ESDW	Coupling designed as a shaft-shaft connection with two rubber disk elements; rubber disk element radially dismountable
EST	Coupling suitable for mounting a Taper clamping bush

Further application-related coupling types are available. Dimension sheets for and information on these are available on request.

The following versions have already been implemented a number of times:

- ELPEX-S coupling with brake drum, brake disk or flywheel mass
- ELPEX-S coupling with axial backlash limiter
- ELPEX-S coupling with adapter
- ELPEX-S coupling with bearing for mounting a cardan shaft
- ELPEX-S coupling for engaging/disengaging during standstill
- ELPEX-S coupling as part of a coupling combination
- ELPEX-S coupling with fail-safe device

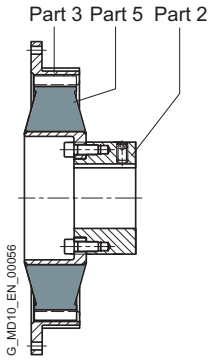

Type **ESN** – long version

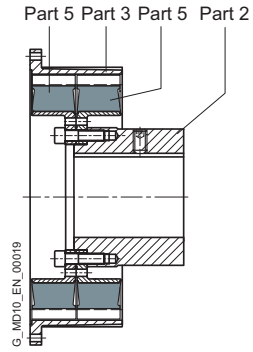

Type **ESD**

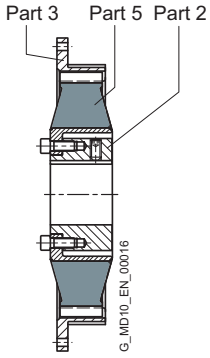

Type **ESN** – short version

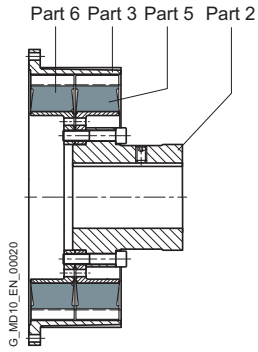

Type **ESDR**

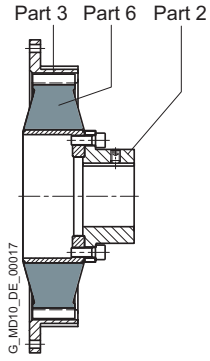

Type **ESNR**

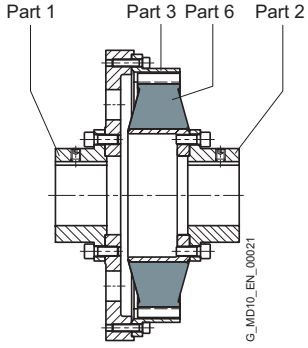

Type **ESNW**

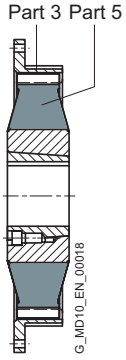

Type **EST**

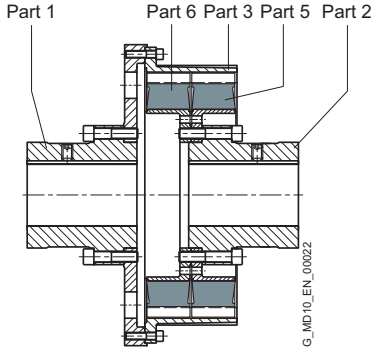

Type **ESDW**

GENERAL

Fail-safe device of ELPEX-S coupling

The ELPEX-S coupling can also be designed with a fail-safe device. If the rubber disk element fails, the coupling can continue operating in emergency mode for a short time. This option is frequently required e.g. in the case of marine drives.

If the rubber disk element fails, cams transmit the torque from the inner and outer parts of the fail-safe device.

In normal operation the torsion angle of the rubber disk element is smaller than the gap between the cams, so there is no metal-metal contact.

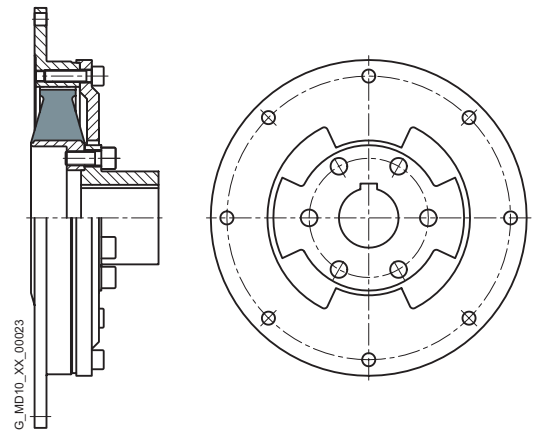

Function

The ELPEX-S coupling's transmission characteristic is determined essentially by the rubber disk element. The torque is transmitted positively between the rubber disk element and the outer flange.

The outer flange can be bolted to e.g. a diesel motor or compressor flywheel.

Configuration

Coupling selection

The ELPEX-S coupling is especially suitable for rough operating environments. An application factor lower than that in **the chapter introduction** is therefore sufficient for all applications.

In the case of machines which excite torsional vibration, Flender urgently recommends carrying out a torsional vibration calculation or measuring the coupling load occurring in the drive.

Coupling load in continuous operation

Application factor FB

	Torque characteristic of the driven machine		
	uniform with moderate shock loads	non uniform	very rough
Electric motors, hydraulic motors, gas and water turbines	1.0	1.3	1.4
Internal-combustion engines	1.3	1.4	1.6

Examples of torque characteristic in driven machines:

- uniform with moderate shock loads: Generators, fans, blowers
- non uniform: Reciprocating compressors, mixers, conveyor systems
- very rough: crushers, excavators, presses, mills

Temperature factor FT

Coupling	Rubber version	Elastomer material	Temperature T_a on the coupling -40 up to -30 °C	-30 up to +50 °C	up to 60 °C	up to 70 °C	up to 80 °C	up to 90 °C	up to 100 °C	up to 110 °C	up to 120 °C
ELPEX-S	SN, NN, WN	NR	1.1	1.0	1.25	1.40	1.60	–	–	–	–

NR = Natural-synthetic rubber mixture

Coupling size $T_{KN} \geqslant T_N \cdot FB \cdot FT$

Coupling load under maximum and overload conditions

The maximum torque is the highest load acting on the coupling in normal operation.
Maximum torques at a frequency of up to 25 times an hour are permitted and must be lower than the maximum coupling torque. Examples of maximum torque conditions are: Starting operations, stopping operations or usual operating conditions with maximum load.

$T_{Kmax} \geqslant T_{Max} \cdot FT$

Overload torques are maximum loads which occur only in combination with special, infrequent operating conditions. Examples of overload torque conditions are: Motor short circuit, emergency stop or blocking because of component breakage. Overload torques at a frequency of once a month are permitted and must be lower than the maximum overload torque of the coupling. The overload condition may last only a short while, i.e. fractions of a second.

$T_{KOL} \geqslant T_{0\,L} \cdot FT$

Coupling load due to dynamic torque load

Applying the frequency factor FF, the dynamic torque load must be lower than the coupling fatigue torque.

Dynamic torque load

$T_{KW} \geqslant T_W \cdot FF \cdot FF$

Frequency of the dynamic torque load
$f_{err} \leqslant 10$ Hz frequency factor FF = 1.0

Frequency of the dynamic torque load
$f_{err} > 10$ Hz frequency factor FF = $\sqrt{(f_{err}/10\ Hz)}$

Operation in potentially explosive environments is subject to the following restriction:
Operation with low fatigue load
The fatigue torque T_{KW} must be reduced by 70 %.
In these particular operating conditions the coupling satisfies the requirements of temperature class T4 D120 °C.
Operation with medium fatigue load
The fatigue torque T_{KW} must be reduced by 50 %. In these particular operating conditions the coupling satisfies the requirements of temperature class T3 D160 °C.
Type EST is not permitted for application in potentially explosive environments.

Checking the maximum speed

The following must apply to all load situations: $n_{Kmax} \geqslant n_{max}$
The maximum speed of a size depends only on the size of the outer flange (part 3).

Checking permitted shaft misalignment and restorative forces

For all load situations, the actual shaft misalignment must be less than the permitted shaft misalignment.

Checking bore diameter, mounting geometry and coupling design

The check must be made on the basis of the dimension tables.
On request, couplings with adapted geometry can be provided.

Checking shaft-hub connection

For any information on this, please refer to **page E/22**.

Checking temperature and chemically aggressive environment

The permitted coupling temperature is specified in the Temperature Factor FT table. In the case of chemically aggressive environments, please consult the manufacturer.

GENERAL

Technical specifications

Performance data for rubber disk elements made of a mix of natural and synthetic rubber

Type	Size	Rubber version	Rated torque T_{KN} Nm	Maximum torque T_{Kmax} Nm	Overload torque T_{KOL} Nm	Fatigue torque T_{KW} Nm	dynamic torsional stiffness C_{Tdyn} Nm/rad	Motor flange SAE J620d Size	Maximum speed n_{max} rpm
ESN . EST	220	WN	330	660	750	165	1600	6.5	4200
		NN	360	720	900	180	2500	7.5	4200
		SN	400	800	1000	200	4200	8	4200
								10	3600
ESN . EST	265	WN	500	1000	1250	250	2400	8	4200
		NN	600	1200	1800	300	3600	10	3600
		SN	700	1400	2100	350	6100	11.5	3500
ESN . EST	290	WN	800	1600	2000	400	3600	10	3600
		NN	900	1800	2700	450	5000	11.5	3500
		SN	1000	2000	3000	500	7500		
ESN . EST	320	WN	1200	2400	3000	600	8000	11.5	3500
		NN	1350	2700	3600	650	10000	14	3000
		SN	1550	3100	4200	750	13500		
ESN . EST	360	WN	1800	3600	4500	900	8500	11.5	3200
		NN	2000	4000	5400	1000	13000	14	3000
		SN	2500	5000	7500	1250	22000		
ESN . EST	420	WN	3100	6200	7700	1500	16000	14	3000
		NN	3450	6900	10000	1700	30000	16	2600
		SN	4200	8400	12600	2100	45000	18	2300
ESN . EST	465	WN	4600	9200	10000	2300	35000	14	3000
		NN	5200	10400	15600	2600	56000	16	2600
		SN	6300	12600	18900	3100	100000	18	2300
ESN .	520	WN	6200	12400	14000	3100	38000	18	2300
		NN	7000	14000	21000	3500	75000	21	2000
		SN	7800	15600	23400	3900	110000		
ESD .	520	WN	12400	24800	28000	6200	76000	18	2300
		NN	14000	28000	42000	7000	150000	21	2000
		SN	15600	31200	46800	7800	220000		
ESN .	560	WN	8000	16000	18000	4200	55000	18	2300
		NN	9000	18000	27000	4800	100000	21	2000
		SN	10000	20000	30000	5500	190000		
ESD .	560	WN	16000	32000	36000	8400	110000	18	2300
		NN	18000	36000	54000	9600	200000	21	2000
		SN	20000	40000	60000	11000	380000		

Performance data for rubber disk elements made of a mix of natural and synthetic rubber

Type	Size	Rubber version	Rated torque T_{KN} Nm	Maximum torque T_{Kmax} Nm	Overload torque T_{KOL} Nm	Fatigue torque T_{KW} Nm	dynamic torsional stiffness C_{Tdyn} Nm/rad	Motor flange SAE J620d Size	Maximum speed max rpm
ESN .	580	WN	11000	22000	28000	5500	75000	18	2300
		NN	12500	25000	37000	6250	120000	21	2000
		SN	14000	28000	42000	7000	210000		
ESD .	580	WN	22000	44000	56000	11000	150000	21	2000
		NN	25000	50000	74000	12500	240000	24	1800
		SN	28000	56000	84000	14000	420000		
ESN .	680	WN	16000	32000	40000	8000	150000	21	2000
		NN	18000	36000	54000	9000	250000	24	1800
		SN	20000	40000	60000	10000	450000		
ESD .	680	WN	32000	64000	80000	16000	300000	21	2000
		NN	36000	72000	108000	18000	500000	24	1800
		SN	40000	80000	120000	20000	900000		
ESN .	770	WN	25000	50000	75000	12500	250000	similar to DIN 6288	1500
		NN	28000	56000	84000	14000	400000		
		SN	31500	63000	94000	15000	700000		
ESD .	770	WN	50000	100000	150000	25000	500000	similar to DIN 6288	1300
		NN	56000	112000	168000	28000	800000		
		SN	63000	126000	189000	30000	1400000		

Damping coefficient of the rubber versions

Rubber version	Hardness ShoreA	Damping coefficient Ψ
WN	55 ° ± 5 °	0.80
NN	65 ° ± 5 °	1.15
SN	75 ° ± 5 °	1.25

Torsional stiffness and damping

Torsional stiffness depends on the ambient temperature and the frequency and amplitude of the torsional vibration excitation. More precise torsional stiffness and damping parameters on request.

With flexible couplings the manufacturing process of the rubber elements and their aging primarily influence the stiffness value C_{Tdyn}.

For this reason calculation must be made with a tolerance for the dynamic stiffness of ± 20 %. The specified damping coefficient Ψ is a minimum value with the result that the damping performance of the coupling corresponds at least to the specified value.

GENERAL

Permitted shaft misalignment

The permitted shaft misalignment depends on the operating speed. As the speed increases, lower shaft misalignment values are permitted.

For fitting, the maximum gap dimension of S max. = S + ΔS and the minimum gap dimension of S min. = S – ΔS are permitted.

Size	Assembly	Permitted shaft misalignment at *n* = 1500 rpm		
	Shaft distance ΔS mm	Axial ΔK_a mm	Radial ΔK_r mm	Angle ΔK_w degree
220	1.3	0.2	1.2	0.5
265	1.3	0.2	1.2	0.5
290	1.5	0.2	1.2	0.5
320	1.5	0.2	1.2	0.5
360	1.5	0.2	1.2	0.5
420	1.5	0.3	1.3	0.4
465	1.7	0.3	1.3	0.4
520	1.7	0.3	1.4	0.4
560	1.7	0.3	1.4	0.4
580	1.8	0.4	1.5	0.3
680	1.8	0.4	1.5	0.3
770	2.0	0.5	1.5	0.3

The correction factors for different speeds are specified in the following table.

The maximum speed for the respective coupling size and type must be noted!

$\Delta K_{perm} = \Delta K_{1500} \cdot FKV$

	Speed in rpm			
	500	1000	1500	3000
Correction factor FKV	1.2	1.1	1.0	0.7

Variants of the outer flange

The outer flange of sizes 220 to 680 is designed to fit the connection dimensions of the SAE J620d standard. The centering depth on the connection flange of the machine should be between 4 mm and 6.4 mm maximum.

Type	Size	Flange connection size	Figure
ESN	220	6.5	1
ESN	220	7.5	2
ESN, ESNR	265	8	
	360	11.5	
	465	14	
	580	18	
	680	21	
ESN	220	8, 10	3
ESN, ESNR	265	10, 11.5	
	290	all	
	320	all	
	360	14	
	420	all	
	465	16, 18	
	520	all	
	560	all	
	580	21	
	680	24	
ESNR	770	all	
ESD, ESDR	520	all	4
	560	all	
	580	all	
ESD, ESDR	680	21	5
ESD, ESDR	680	24	6
ESDR	770	all	

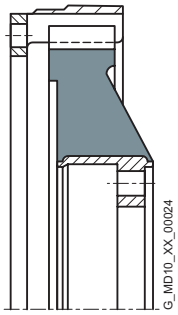

Figure 1

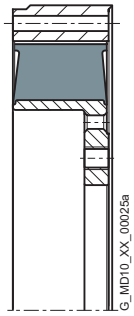

Figure 2

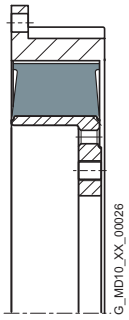

Figure 3

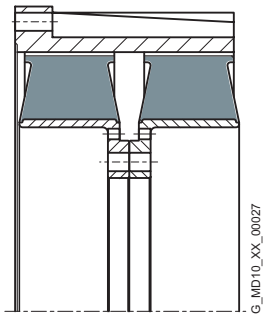

Figure 4

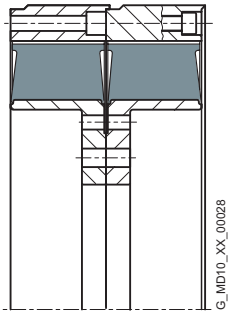

Figure 5

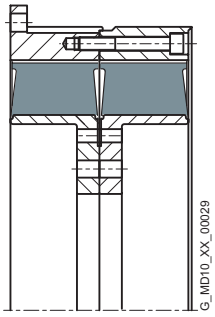

Figure 6

TYPE ESN

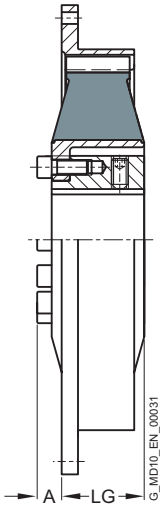

Short version

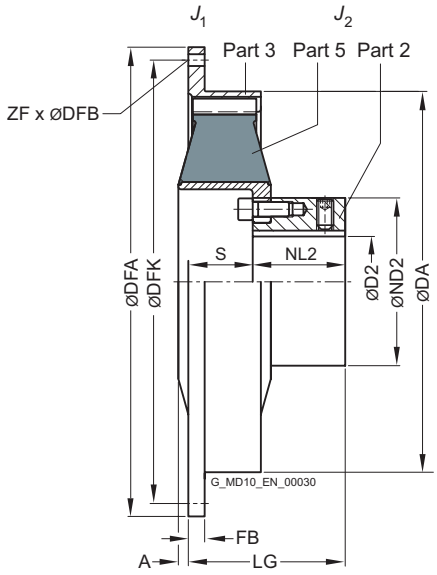

Long version

Size	Dimensions in mm														Mass moment of inertia		↗ Article no. [1]		Weight
	D2 Keyway DIN 6885 max.	DA	ND2	NL2	short version A	short version LG	long version A	long version S	long version LG	Flange connection dimensions SAE size	DFA	DFK	FB	ZF	DFB	J_1	J_2	Type short version	Type long version	m
											g7					kgm²	kgm²			kg
220	60	222	98	54	-	-	0	49	103	6.5	215.9	200.0	6	6	8.5	0.008	0.01	–	2LC0220-0AB0	5.8
		237						40	94	7.5	241.3	222.3	33	8	8.5	0.011		–	2LC0220-0AB0	6.1
		222						40	94	8	263.5	244.5	8	6	10.5	0.011		–	2LC0220-0AB0	6.4
		222						40	94	10	314.3	295.3	8	8	10.5	0.017		–	2LC0220-0AB0	6.9
265	65	263	118	65	15	74	3	39	104	8	263.5	244.5	33	6	10.5	0.011	0.022	2LC0220-1AA0	2LC0220-1AB0	6.6
										10	314.3	295.3	10	8		0.017		2LC0220-1AA0	2LC0220-1AB0	6.9
										11.5	352.4	333.4	10	8		0.024		2LC0220-1AA0	2LC0220-1AB0	7.2
290	65	290	118	70	18	58	6	36	106	10	314.3	295.3	16	8	10.5	0.026	0.026	2LC0220-2AA0	2LC0220-2AB0	9.2
										11.5	352.4	333.4	16	8		0.036		2LC0220-2AA0	2LC0220-2AB0	10.5
320	80	318	140	87	15	96	2	70	157	11.5	352.4	333.4	16	8	10.5	0.062	0.061	2LC0220-3AA0	2LC0220-3AB0	19
										14	466.7	438.2	16	8	13	0.18		2LC0220-3AA0	2LC0220-3AB0	20.5
360	90	353.5	160	105	29	92	13	56	161	11.5	352.4	333.4	54	8	10.5	0.065	0.13	2LC0220-4AA0	2LC0220-4AB0	24.5
										14	466.7	438.2	15	8	13	0.18		2LC0220-4AA0	2LC0220-4AB0	27.5
420	100	420	185	102	26	92	10	72	174	14	466.7	438.2	18	8	13	0.22	0.32	2LC0220-5AA0	2LC0220-5AB0	36
										16	517.5	489.0	18	8	13	0.32		2LC0220-5AA0	2LC0220-5AB0	38
										18	571.5	542.9	18	6	17	0.47		2LC0220-5AA0	2LC0220-5AB0	40

Configurable variants [1]

• ØD2	Without finished bore With finished bore
• Rubber version	WN NN SN

[1] To identify complete item numbers specifying the available finish boring options and – if necessary – further order options, please use our configurators on **flender.com**.

↗ For online configuration on **flender.com**, click on the item no.

Size	Dimensions in mm									Flange connection dimensions						Mass moment of inertia		↗ Article no. [1]		Weight
	D2 Keyway DIN 6885 max.	DA	ND2	NL2	short version A	short version LG	long version A	long version S	long version LG	SAE size	DFA g7	DFK	FB	ZF	DFB	J_1 kgm²	J_2 kgm²	Type short version	Type long version	m kg
465	**120**	465	222	125	33	92	2	39	164	14	466.7	438.2	85	8	13	0.31	0.58	**2LC0220-6AA0**	**2LC0220-6AB0**	56
										16	517.5	489.0	27	8	13	0.41		**2LC0220-6AA0**	**2LC0220-6AB0**	57
										18	571.5	542.9	18	6	17	0.52		**2LC0220-6AA0**	**2LC0220-6AB0**	61
520	**165**	514	250	142	16	159	0	83	225	18	571.5	542.9	18	12	17	0.48	0.93	**2LC0220-7AA0**	**2LC0220-7AB0**	55
										21	673.1	641.4	18	12		0.95		**2LC0220-7AA0**	**2LC0220-7AB0**	60
560	**200**	560	320	140	30	130	2.5	83	223	18	571.5	542.9	35	12	17	0.85	1.2	**2LC0220-8AA0**	**2LC0220-8AB0**	69
										21	673.1	641.4	20	12		1.8		**2LC0220-8AA0**	**2LC0220-8AB0**	78
580	**200**	580	316	200	23	215	0	100	300	18	571.5	542.9	104	12	17	0.77	1.8	**2LC0221-0AA0**	**2LC0221-0AB0**	100
										21	673.1	641.4	26	12		1.2		**2LC0221-0AA0**	**2LC0221-0AB0**	105
680	**220**	682	380	210	24	232	0	102	312	21	673.1	641.4	85	12	17	4.1	5.3	**2LC0221-1AA0**	**2LC0221-1AB0**	205
										24	733.4	692.2	20	12	21	5.3		**2LC0221-1AA0**	**2LC0221-1AB0**	215

Configurable variants [1]

• ØD2	Without finished bore With finished bore
• Rubber version	WN NN SN

Notes

- The rubber disk element cannot be dismounted until the machines have been moved.
- Weight and mass moments of inertia apply to maximum bore diameters.

Ordering example

- ELPEX-S ESN coupling, size 520, WN rubber element version
- Bore ØD2 = 150H7 mm, with keyway to DIN 6885 and set screw, outer flange to SAE J620d size 21

Short version article no.: **2LC0220-7AA09-1JA0-Z M1W**
Long version article no.: **2LC0220-7AB09-1JA0-Z M1W**

[1] To identify complete item numbers specifying the available finish boring options and – if necessary – further order options, please use our configurators on **flender.com**.

↗ For online configuration on **flender.com**, click on the item no.

TYPE ESNR

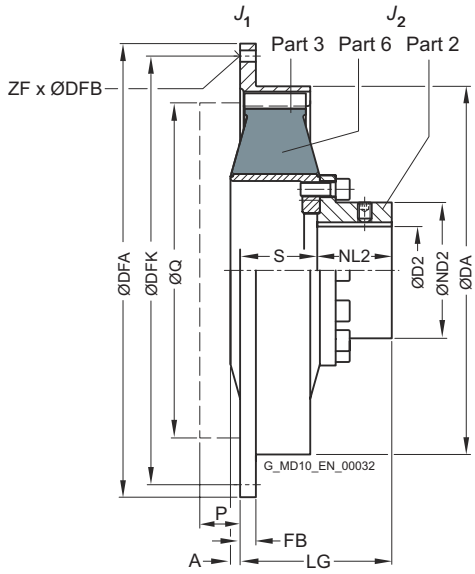

Size	Dimensions in mm									Flange connection dimensions						Mass moment of inertia		↗ Article no. [1]	Weight
	D2 Keyway DIN 6885 max.	DA	ND2	NL2	S	A	P	Q	LG	SAE size	DFA g7	DFK	FB	ZF	DFB	J_1 kgm²	J_2 kgm²		m kg
265	50	263	78	65	42	-	10	225	107	8	263.5	244.5	33	6	10.5	0.011	0.022	2LC0220-1AC0	5.0
										10	314.3	295.3	10	8		0.017		2LC0220-1AC0	5.3
										11.5	352.4	333.4	10	8		0.024		2LC0220-1AC0	5.6
290	50	290	78	65	59	2	15	276	124	10	314.3	295.3	16	8	10.5	0.026	0.026	2LC0220-2AC0	8.1
										11.5	352.4	333.4	16	8		0.036		2LC0220-2AC0	8.4
320	65	318	98	87	74	0	20	310	161	11.5	352.4	333.4	16	8	10.5	0.062	0.061	2LC0220-3AC0	13.5
										14	466.7	438.2	16	8	13	0.18		2LC0220-3AC0	16
360	85	353.5	123	88	77	9	28	314	165	11.5	352.4	333.4	54	8	10.5	0.065	0.13	2LC0220-4AC0	20
										14	466.7	438.2	15	8	13	0.18		2LC0220-4AC0	23
420	100	420	155	85	93	6	28	409	178	14	466.7	438.2	18	8	13	0.22	0.32	2LC0220-5AC0	31
										16	517.5	489.0	18	8	13	0.32		2LC0220-5AC0	32
										18	571.5	542.9	18	6	17	0.47		2LC0220-5AC0	35
465	130	465	190	119	88	-	15	409	207	14	466.7	438.2	85	8	13	0.31	0.58	2LC0220-6AC0	41
										16	517.5	489.0	27	8	13	0.41		2LC0220-6AC0	42
										18	571.5	542.9	18	6	17	0.52		2LC0220-6AC0	45

Configurable variants [1]

• ØD2	Without finished bore With finished bore
• Rubber version	WN NN SN

[1] To identify complete item numbers specifying the available finish boring options and – if necessary – further order options, please use our configurators on **flender.com**.

↗ For online configuration on **flender.com**, click on the item no.

Size	Dimensions in mm									Flange connection dimensions						Mass moment of inertia		↗ Article no. [1]	Weight
	D2 Keyway DIN 6885 max.	DA	ND2	NL2	S	A	P	Q	LG	SAE size	DFA g7	DFK	FB	ZF	DFB	J_1 kgm²	J_2 kgm²		m kg
520	150	514	227	162	85	-	10	498	247	18	571.5	542.9	18	12	17	0.48	0.93	2LC0220-7AC0	59
										21	673.1	641.4	18	12		0.95		2LC0220-7AC0	64
560	150	560	240	180	99	-	10	498	279	18	571.5	542.9	35	12	17	0.85	1.2	2LC0220-8AC0	75
										21	673.1	641.4	20	12		1.8		2LC0220-8AC0	85
580	160	580	240	200	102	-	10	498	302	18	571.5	542.9	104	12	17	0.77	1.8	2LC0221-0AC0	80
										21	673.1	641.4	26	12		1.2		2LC0221-0AC0	84
680	200	682	300	210	102	-	10	584	312	21	673.1	641.4	85	12	17	4.1	5.3	2LC0221-1AC0	155
										24	733.4	692.2	20	12	21	5.3		2LC0221-1AC0	165
770	260	780	390	255	134	-	10	750	389	-	860.0	820.0	26	32	21	10.7	12	2LC0221-2AC0	330
											920.0	880.0	27	32	21	15.4		2LC0221-2AC0	350
											995.0	950.0	27	32	21	20.5		2LC0221-2AC0	375

Configurable variants [1]

• ØD2	Without finished bore With finished bore
• Rubber version	WN NN SN

Notes

- Weight and mass moments of inertia apply to maximum bore diameters.
- P, Q = required space for radial dismounting of the rubber disk element.

Ordering example

- ELPEX-S ESNR coupling, size 320, WN rubber element version
- Bore ØD2 = 50H7 mm, with keyway to DIN 6885 and set screw, outer flange to SAE J620d size 14

Article no.: 2LC0220-3AC09-1FA0-Z M1C

11

[1] To identify complete item numbers specifying the available finish boring options and – if necessary – further order options, please use our configurators on **flender.com**.

↗ For online configuration on **flender.com**, click on the item no.

TYPE ESD

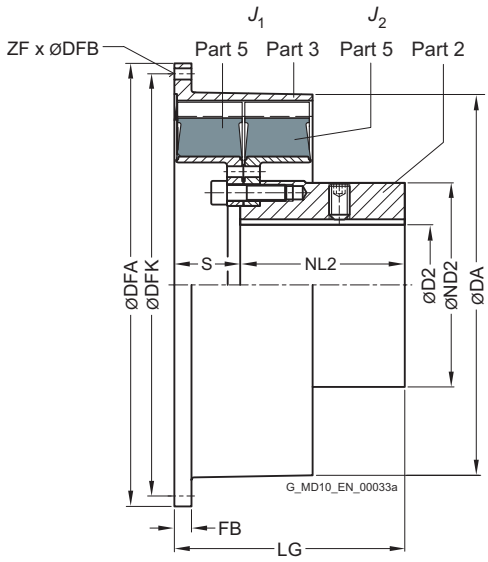

Size	Dimensions in mm												Mass moment of inertia		↗ Article no. [1]	Weight
							Flange connection dimensions									
	D2 Keyway DIN 6885 max.	DA	ND2	NL2	S	LG	SAE size	DFA g7	DFK	FB	ZF	DFB	J_1 kgm²	J_2 kgm²		m kg
520	**165**	525	250	174	81	255	18	571.5	542.9	25	12	17	1	1.6	**2LC0220-7AD0**	85
							21	673.1	641.4	18	12	17	1.5		**2LC0220-7AD0**	90
560	**170**	560	316	210	60	270	18	571.5	542.9	35	12	17	1.7	2.8	**2LC0220-8AD0**	140
							21	673.1	641.4	25	12	17	2.6		**2LC0220-8AD0**	150
580	**200**	585	310	250	100	350	21	673.1	641.4	26	12	17	2	3.8	**2LC0221-0AD0**	170
							24	733.4	692.2	26	12	21	2.6		**2LC0221-0AD0**	175
680	**220**	682	380	250	17	267	21	673.1	641.4	85	12	17	8.2	7	**2LC0221-1AD0**	265
							24	733.4	692.2	20	12	21	9.4		**2LC0221-1AD0**	275

Configurable variants [1]

• ØD2	Without finished bore With finished bore
• Rubber version	WN NN SN

Notes

- The rubber disk element cannot be dismounted until the machines have been moved.
- Weight and mass moments of inertia apply to maximum bore diameters.

Ordering example

- ELPEX-S ESD coupling, size 680, WN rubber element version
- Bore ØD2 = 180H7 mm, with keyway to DIN 6885 and set screw, outer flange to SAE J620d size 24

Article no.: 2LC0221-1AD09-1KA0-Z M2B

[1] To identify complete item numbers specifying the available finish boring options and – if necessary – further order options, please use our configurators on **flender.com**.

↗ For online configuration on **flender.com**, click on the item no.

TYPE ESDR

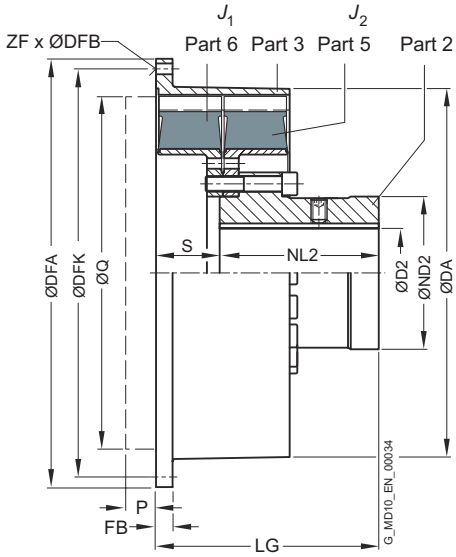

Size	Dimensions in mm								Flange connection dimensions						Mass moment of inertia		↗ Article no. [1]	Weight
	D2 Keyway DIN 6885 max.	DA	ND2	NL2	S	P	Q	LG	SAE size	DFA g7	DFK	FB	ZF	DFB	J_1 kgm²	J_2 kgm²		m kg
520	**150**	525	227	226	83	10	498	309	18	571.5	542.9	25	12	17	1	1.8	**2LC0220-7AE0**	105
									21	673.1	641.4	18	12	17	1.5		**2LC0220-7AE0**	110
560	**160**	560	240	240	100	10	498	340	18	571.5	542.9	35	12	17	1.7	2.5	**2LC0220-8AE0**	135
									21	673.1	641.4	25	12	17	2.6		**2LC0220-8AE0**	140
580	**160**	585	240	250	100	10	560	350	21	673.1	641.4	26	12	17	2	3.2	**2LC0221-0AE0**	145
									24	733.4	692.2	26	12	21	2.6		**2LC0221-0AE0**	150
680	**200**	682	300	250	102	10	584	352	21	673.1	641.4	85	12	17	8.2	6.5	**2LC0221-1AE0**	260
									24	733.4	692.2	20	12	21	9.4		**2LC0221-1AE0**	270
770	**260**	780	390	300	200	10	750	500	-	860.0	820.0	19	32	21	22.3	20	**2LC0221-2AE0**	540
										920.0	880.0	27	32		26		**2LC0221-2AE0**	555
										995.0	950.0	27	32		31		**2LC0221-2AE0**	600

Configurable variants [1]

• ØD2	Without finished bore With finished bore
• Rubber version	WN NN SN

Notes

- Weight and mass moments of inertia apply to maximum bore diameters.
- P, Q = required space for radial dismounting of the rubber disk element.

Ordering example

- ELPEX-S ESDR coupling, size 560, WN rubber element version
- Bore ØD2 = 120H7 mm, with keyway to DIN 6885 and set screw, outer flange to SAE J620d size 21

Article no.: 2LC0220-8AE09-1JA0-Z M1S

[1] To identify complete item numbers specifying the available finish boring options and – if necessary – further order options, please use our configurators on **flender.com**.

↗ For online configuration on **flender.com**, click on the item no.

TYPE ESNW

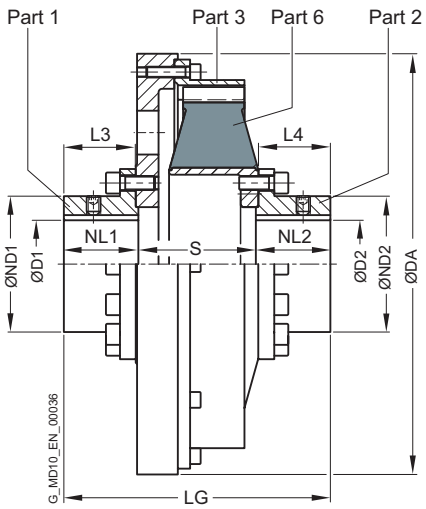

Size	Dimensions in mm								Mass moment of inertia		↗ Article no. [1]	Weight
	D1/D2 Keyway DIN 6885 max.	DA	ND1/ND2	NL1/NL2	L3	L4	S	LG	J_1 kgm²	J_2 kgm²		m kg
265	**50**	275	78	65	62	66	68	198	0.11	0.017	**2LC0220-1AG**	15
290	**50**	325	78	65	62	68	89	219	0.21	0.028	**2LC0220-2AG**	22
320	**65**	365	98	87	84	92	105	279	0.37	0.042	**2LC0220-3AG**	32
360	**85**	365	123	88	85	96	123	299	0.45	0.11	**2LC0220-4AG**	43
420	**100**	480	155	85	82	94	134	304	1.5	0.3	**2LC0220-5AG**	75
465	**130**	480	190	119	116	119	125	363	1.6	0.54	**2LC0220-6AG**	89
520	**150**	585	227	162	159	161	123	447	4	0.94	**2LC0220-7AG**	155
560	**150**	585	240	180	174	174	132	492	4.1	1.2	**2LC0220-8AG**	160
580	**160**	685	240	200	195	198	145	545	5.5	1.6	**2LC0221-0AG**	185
680	**200**	685	300	210	205	201	150	570	12	3.6	**2LC0221-1AG**	315
770	**260**	870	390	255	250	253	180	690	27.2	12	**2LC0221-2AG**	500

Configurable variants [1]

• ØD1	Without finished bore With finished bore
• ØD2	Without finished bore With finished bore
• Rubber version	WN NN SN

Notes

- Weight and mass moments of inertia apply to maximum bore diameters.

Ordering example

- ELPEX-S ESNW coupling, size 520, WN rubber element version
- Bore ØD1 140H7 mm, keyway to DIN 6885 and set screw
- Bore ØD2 120H7 mm, keyway to DIN 6885 and set screw

Article no.: 2LC0220-7AG99-1AA0-Z L1V+M1S

[1] To identify complete item numbers specifying the available finish boring options and – if necessary – further order options, please use our configurators on **flender.com**.

↗ For online configuration on **flender.com**, click on the item no.

TYPE ESDW

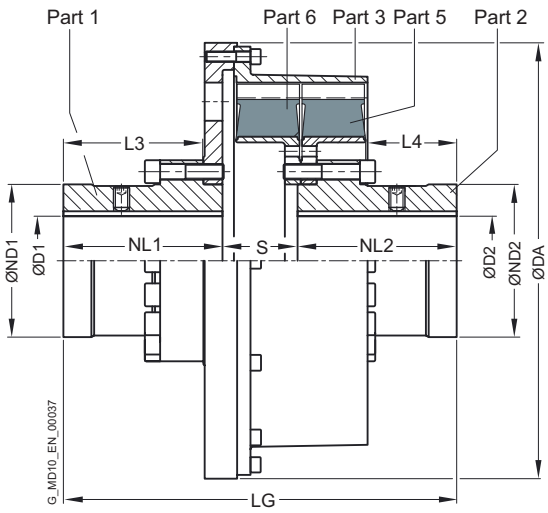

Size	Dimensions in mm								Mass moment of inertia		↗ Article no. [1]	Weight
	D1/D2 Keyway DIN 6885 max.	DA	ND1/ND2	NL1/NL2	L3	L4	S	LG	J_1 kgm²	J_2 kgm²		m kg
520	**150**	585	227	226	201	135	100	552	4.7	1.8	**2LC0220-7AH**	215
560	**160**	585	240	240	215	133	114	594	5.4	2.5	**2LC0220-8AH**	250
580	**160**	685	240	250	220	140	120	620	10.1	3.2	**2LC0221-0AH**	300
680	**200**	685	300	250	218	134	125	625	14.5	6.5	**2LC0221-1AH**	440
770	**260**	870	390	300	265	238	220	820	40	20	**2LC0221-2AH**	720

Configurable variants [1]

• ØD1	Without finished bore With finished bore
• ØD2	Without finished bore With finished bore
• Rubber version	WN NN SN

Notes

- Weight and mass moments of inertia apply to maximum bore diameters.

Ordering example

- ELPEX-S ESDW coupling, size 520, WN rubber element version
- Bore ØD1 140H7 mm, keyway to DIN 6885 and set screw
- Bore ØD2 120H7 mm, keyway to DIN 6885 and set screw

Article no.: 2LC0220-7AH99-1AA0-Z L1V+M1S

[1] To identify complete item numbers specifying the available finish boring options and – if necessary – further order options, please use our configurators on **flender.com**.

↗ For online configuration on **flender.com**, click on the item no.

TYPE EST

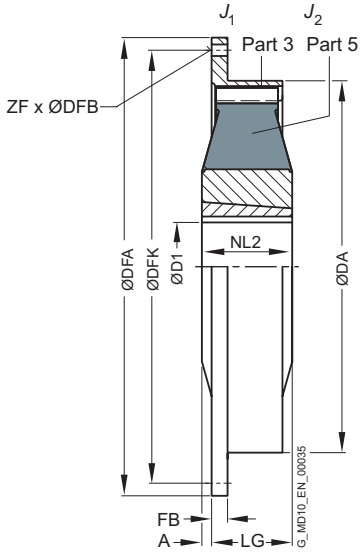

Size	Taper Clamping Bush Size	Dimensions in mm												Mass moment of inertia		↗ Article no. [1]	Weight
		D1 Keyway DIN 6885		DA	NL2	A	LG	Flange connection dimensions									
								SAE size	DFA	DFK	FB	ZF	DFB	J_1	J_2		m
		min.	max.											kgm²	kgm²		kg
220	2012	14	**50**	222	32	0	52	6.5	215.9	200.0	6	6	8.5	0.008	0.008	**2LC0220-0AF0**	3.6
							43	7.5	241.3	222.3	33	8	8.5	0.008		**2LC0220-0AF0**	3.5
								8	263.5	244.5	8	6	10.5	0.011		**2LC0220-0AF0**	3.7
								10	314.3	295.3	8	8	10.5	0.020		**2LC0220-0AF0**	4.2
265	2517	16	**60**	263	45	3	42	8	263.5	244.5	33	6	10.5	0.011	0.019	**2LC0220-1AF0**	5.9
								10	314.3	295.3	10	8		0.017		**2LC0220-1AF0**	6.2
								11.5	352.4	333.4	10	8		0.024		**2LC0220-1AF0**	6.5
290	2517	16	**60**	290	64	6	58	10	314.3	295.3	16	8	10.5	0.026	0.026	**2LC0220-2AF0**	8.5
								11.5	352.4	333.4	16	8		0.036		**2LC0220-2AF0**	8.8
320	3030	35	**75**	318	76	2	73	11.5	352.4	333.4	16	8	10.5	0.062	0.06	**2LC0220-3AF0**	14
								14	466.7	438.2	16	8	13	0.18		**2LC0220-3AF0**	17
360	3535	35	**90**	353.5	89	13	76	11.5	352.4	333.4	54	8	10.5	0.065	0.13	**2LC0220-4AF0**	21
								14	466.7	438.2	15	8	13	0.18		**2LC0220-4AF0**	24
420	4040	40	**100**	420	102	10	92	14	466.7	438.2	18	8	13	0.22	0.33	**2LC0220-5AF0**	37
								16	517.5	489.0	18	8	13	0.32		**2LC0220-5AF0**	38
								18	571.5	542.9	18	6	17	0.47		**2LC0220-5AF0**	41
465	4545	55	**110**	465	115	28	87	14	466.7	438.2	85	8	13	0.31	0.76	**2LC0220-6AF0**	63
								16	517.5	489.0	27	8	13	0.41		**2LC0220-6AF0**	64
								18	571.5	542.9	18	6	17	0.52		**2LC0220-6AF0**	68

Configurable variants [1]

• ØD1	Without finished bore With finished bore
• Rubber version	WN NN SN

Ordering example

- ELPEX-S EST coupling, size 265,
  WN rubber element version,
  with Taper clamping bush size 2517
- Bore ØD2 = 30 mm, outer flange to SAE J620d size 10

Article no.: 2LC0220-1AF99-1DA0-Z M0S

Notes

- The rubber disk element cannot be dismounted until the machines have been moved.
- Weight and mass moments of inertia apply to maximum bore diameters.

[1] To identify complete item numbers specifying the available finish boring options and – if necessary – further order options, please use our configurators on **flender.com**.

↗ For online configuration on **flender.com**, click on the item no.

SPARE AND WEAR PARTS

Rubber disk elements

Size	↗ Article No. set of rubber disk elements for a coupling Coupling type EST without Taper clamping bush	with Taper clamping bush	ESN	ESNR, ESNW	ESD	ESDR, ESDW
WN rubber version						
220	2LC0220-0XL10-1AA0	2LC0220-0XL90-1AA0	2LC0220-0XJ00-1AA0			
265	2LC0220-1XL10-1AA0	2LC0220-1XL90-1AA0	2LC0220-1XJ00-1AA0	2LC0220-1XM00-1AA0		
290	2LC0220-2XL10-1AA0	2LC0220-2XL90-1AA0	2LC0220-2XJ00-1AA0	2LC0220-2XM00-1AA0		
320	2LC0220-3XL10-1AA0	2LC0220-3XL90-1AA0	2LC0220-3XJ00-1AA0	2LC0220-3XM00-1AA0		
360	2LC0220-4XL10-1AA0	2LC0220-4XL90-1AA0	2LC0220-4XJ00-1AA0	2LC0220-4XM00-1AA0		
420	2LC0220-5XL10-1AA0	2LC0220-5XL90-1AA0	2LC0220-5XJ00-1AA0	2LC0220-5XM00-1AA0		
465	2LC0220-6XL10-1AA0	2LC0220-6XL90-1AA0	2LC0220-6XJ00-1AA0	2LC0220-6XM00-1AA0		
520			2LC0220-7XJ00-1AA0	2LC0220-7XM00-1AA0	2LC0220-7XK00-1AA0	2LC0220-7XN00-1AA0
560			2LC0220-8XJ00-1AA0	2LC0220-8XM00-1AA0	2LC0220-8XK00-1AA0	2LC0220-8XN00-1AA0
580			2LC0221-0XJ00-1AA0	2LC0221-0XM00-1AA0	2LC0221-0XK00-1AA0	2LC0221-0XN00-1AA0
680			2LC0221-1XJ00-1AA0	2LC0221-1XM00-1AA0	2LC0221-1XK00-1AA0	2LC0221-1XN00-1AA0
770				2LC0221-2XM00-1AA0		2LC0221-2XN00-1AA0
NN rubber version						
220	2LC0220-0XL10-2AA0	2LC0220-0XL90-2AA0	2LC0220-0XJ00-2AA0			
265	2LC0220-1XL10-2AA0	2LC0220-1XL90-2AA0	2LC0220-1XJ00-2AA0	2LC0220-1XM00-2AA0		
290	2LC0220-2XL10-2AA0	2LC0220-2XL90-2AA0	2LC0220-2XJ00-2AA0	2LC0220-2XM00-2AA0		
320	2LC0220-3XL10-2AA0	2LC0220-3XL90-2AA0	2LC0220-3XJ00-2AA0	2LC0220-3XM00-2AA0		
360	2LC0220-4XL10-2AA0	2LC0220-4XL90-2AA0	2LC0220-4XJ00-2AA0	2LC0220-4XM00-2AA0		
420	2LC0220-5XL10-2AA0	2LC0220-5XL90-2AA0	2LC0220-5XJ00-2AA0	2LC0220-5XM00-2AA0		
465	2LC0220-6XL10-2AA0	2LC0220-6XL90-2AA0	2LC0220-6XJ00-2AA0	2LC0220-6XM00-2AA0		
520			2LC0220-7XJ00-2AA0	2LC0220-7XM00-2AA0	2LC0220-7XK00-2AA0	2LC0220-7XN00-2AA0
560			2LC0220-8XJ00-2AA0	2LC0220-8XM00-2AA0	2LC0220-8XK00-2AA0	2LC0220-8XN00-2AA0
580			2LC0221-0XJ00-2AA0	2LC0221-0XM00-2AA0	2LC0221-0XK00-2AA0	2LC0221-0XN00-2AA0
680			2LC0221-1XJ00-2AA0	2LC0221-1XM00-2AA0	2LC0221-1XK00-2AA0	2LC0221-1XN00-2AA0
770				2LC0221-2XM00-2AA0		2LC0221-2XN00-2AA0
SN rubber version						
220	2LC0220-0XL10-3AA0	2LC0220-0XL90-3AA0	2LC0220-0XJ00-3AA0			
265	2LC0220-1XL10-3AA0	2LC0220-1XL90-3AA0	2LC0220-1XJ00-3AA0	2LC0220-1XM00-3AA0		
290	2LC0220-2XL10-3AA0	2LC0220-2XL90-3AA0	2LC0220-2XJ00-3AA0	2LC0220-2XM00-3AA0		
320	2LC0220-3XL10-3AA0	2LC0220-3XL90-3AA0	2LC0220-3XJ00-3AA0	2LC0220-3XM00-3AA0		
360	2LC0220-4XL10-3AA0	2LC0220-4XL90-3AA0	2LC0220-4XJ00-3AA0	2LC0220-4XM00-3AA0		
420	2LC0220-5XL10-3AA0	2LC0220-5XL90-3AA0	2LC0220-5XJ00-3AA0	2LC0220-5XM00-3AA0		
465	2LC0220-6XL10-3AA0	2LC0220-6XL90-3AA0	2LC0220-6XJ00-3AA0	2LC0220-6XM00-3AA0		
520			2LC0220-7XJ00-3AA0	2LC0220-7XM00-3AA0	2LC0220-7XK00-3AA0	2LC0220-7XN00-3AA0
560			2LC0220-8XJ00-3AA0	2LC0220-8XM00-3AA0	2LC0220-8XK00-3AA0	2LC0220-8XN00-3AA0
580			2LC0221-0XJ00-3AA0	2LC0221-0XM00-3AA0	2LC0221-0XK00-3AA0	2LC0221-0XN00-3AA0
680			2LC0221-1XJ00-3AA0	2LC0221-1XM00-3AA0	2LC0221-1XK00-3AA0	2LC0221-1XN00-3AA0
770				2LC0221-2XM00-3AA0		2LC0221-2XN00-3AA0

Notes

- The ELPEX-S coupling rubber disk elements are wear parts. The service life depends on the operating conditions.

HIGHLY FLEXIBLE COUPLINGS – ELPEX SERIES

General	**12/3**
Benefits	12/3
Application	12/3
Design and configurations	12/4
Configuration	12/5
Technical specifications	12/7
Type ENG	**12/8**
Type ENGS – with fail-safe device	**12/10**
Type EFG	**12/12**
Type EFGS – with fail-safe device	**12/14**
Spare and wear parts	**12/16**

12

ELPEX
FLENDER

GENERAL

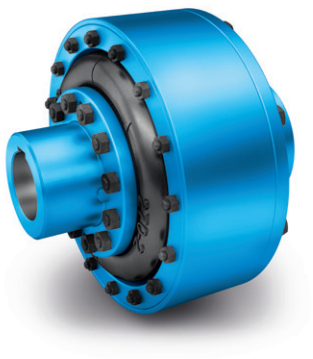

ELPEX couplings are highly torsionally flexible and free of torsional backlash. Because of their low torsional stiffness and damping capacity, ELPEX couplings are especially suitable for coupling machines with a very non uniform torque pattern. ELPEX couplings are also suitable for connecting machines with high shaft misalignment. Standard ELPEX coupling types are designed as shaft-shaft connections or flange-shaft connections. Application-related types can be implemented on request.

Benefits

The ELPEX coupling is suitable for horizontal and vertical mounting positions or mounting at any required angle. The coupling parts can be arranged as required on the shafts to be connected.

The split flexible rings can be changed without having to move the coupled machines.

The flexible rings are mounted without backlash and give the coupling progressive torsional stiffness, i.e. torsional stiffness increases in proportion to coupling load.

The ELPEX coupling is especially suitable for reversing operation or operation with changing directions of load.

The coupling is delivered preassembled. The flexible rings are completely assembled. On the type ENG, the coupling halves have to be bolted together after the hub has been mounted. On the type EFG, after mounting the coupling hub, only the outer flange has to be connected to the machine.

Outer flanges with different connection dimensions are available for the type EFG.

If the flexible rings are irreparably damaged or worn, the metal parts can rotate freely against one another, they are not in contact with one another.

Application

The ELPEX coupling is available in 9 sizes with a nominal torque of between 1600 Nm and 90000 Nm. The coupling is suitable for ambient temperatures of between -40 °C and +80 °C.

The ELPEX coupling is frequently used for high-quality drives which have to guarantee very long service life in harsh operating conditions.

Examples of applications are mill drives in the cement industry, marine main and secondary drives or drives on large excavators powered by an electric motor or diesel engine.

GENERAL

Design and configurations

The ELPEX coupling's transmission characteristic is determined essentially by the flexible rings. The flexible rings are manufactured from a natural rubber mixture with a multiply fabric lining. The flexible rings are split so that they can be changed without having to move the coupled machines.

The flexible rings are fastened to the hub with a clamping ring and to the outer flange with a clamping ring, using pins and bolts.

On the EFG type, the outer flange is designed with connection dimensions for connection to e.g. a diesel engine flywheel. On ENG types, the outer flange is fitted to a second hub part, which then enables the shaft-shaft connection.

Materials

	Type Cast iron	Steel
Hub part 1	Grey cast iron EN-GJL-250	Steel
Hub part 2	Steel	Steel
Retaining ring, outer ENG, ENGS	Grey cast iron EN-GJL-250	Steel
Outer flange EFG, EFGS	Grey cast iron EN-GJL-250	Steel

Flexible ring materials

Material/ Description	Hardness	Marking	Ambient temperature
Natural rubber	70 ShoreA	Size - 2	-40 ... +80 °C

ELPEX coupling types

Type	Description
ENG	Coupling as shaft-shaft connection
EFG	Coupling as flange-shaft connection
ENGS	as ENG with fail-safe device
EFGS	as EFG with fail-safe device

Further application-specific coupling types are available. Dimension sheets for and information on these are available on request.

The following versions have already been implemented a number of times:

- ELPEX coupling with brake drum, brake disk or flywheel mass
- ELPEX coupling with axial backlash limiter
- ELPEX coupling with adapter
- ELPEX coupling in combination with a safety slip clutch
- ELPEX coupling for engaging/disengaging during standstill ELPEX coupling as part of a coupling combination

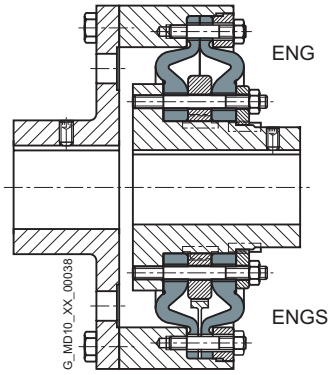

Types ENG/ENGS

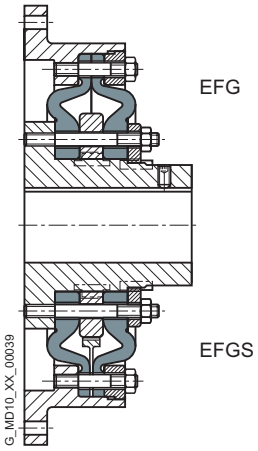

Types EFG/EFGS

Fail-safe device of ELPEX coupling

Types ENGS and EFGS are provided with a fail-safe device. In normal operation the torsion angle of the flexible rings is smaller than the gap between the cams. In normal operation there is no metal-metal contact.
If the flexible rings fail, cams transmit the torque from the inner part and outer part. These enable the coupling to be used in emergency mode for a short time. This option is frequently required e.g. in the case of marine drives.

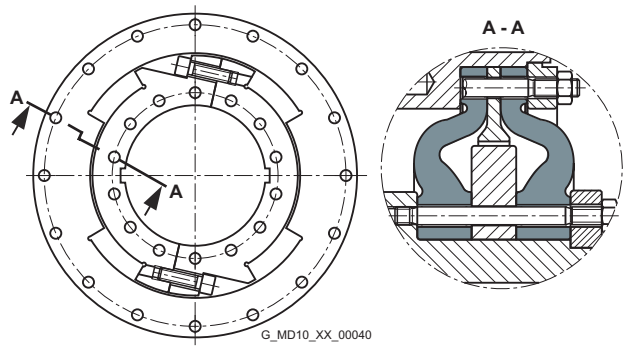

Fail-safe device

Configuration

Coupling selection

The ELPEX coupling is especially suitable for rough operating environments. An application factor lower than that in **Chapter introduction** is therefore sufficient for all applications.

In the case of machines which excite torsional vibration, Flender urgently recommends carrying out a torsional vibration calculation or measuring the coupling load occurring in the drive.

Coupling load in continuous operation

The operating principles of the driving and driven machines are divided into categories and the application factor FB derived from these in accordance with DIN 3990-1.

Application factor FB

	Torque characteristic of the driven machine		
	uniform with moderate shock loads	non uniform	very rough
Electric motors, hydraulic motors, gas and water turbines	1.0	1.3	1.4
Internal-combustion engines	1.3	1.4	1.6

Temperature factor FT

Coupling	Elastomer material	Temperature T_a on the coupling				
		-40 up to -30 °C	-30 up to +50 °C	up to 60 °C	up to 70 °C	up to 80 °C
ELPEX	NR	1.1	1.0	1.25	1.40	1.60

NR = Natural rubber mixture

Coupling size $T_{KN} \geqslant T_N \cdot FB \cdot FT$

Examples of torque characteristic in driven machines:

- uniform with moderate shock loads: Generators, fans, blowers
- non uniform: Reciprocating compressors, mixers, conveyor systems
- very rough: crushers, excavators, presses, mills

GENERAL

Coupling load under maximum and overload conditions

The maximum torque is the highest load acting on the coupling in normal operation.
Maximum torques at a frequency of up to 25 times an hour are permitted and must be lower than the maximum coupling torque. Examples of maximum torque conditions are: Starting operations, stopping operations or usual operating conditions with maximum load.

$T_{Kmax} \geqslant T_{Max} \cdot FT$

Overload torques are maximum loads which occur only in combination with special, infrequent operating conditions. Examples of overload torque conditions are: Motor short circuit, emergency stop or blocking because of component breakage. Overload torques at a frequency of once a month are permitted and must be lower than the maximum overload torque of the coupling. The overload condition may last only a short while, i.e. fractions of a second.

$T_{KOL} \geqslant T_{OL} \cdot FT$

Coupling load due to dynamic torque load

Applying the frequency factor FF, the dynamic torque load must be lower than the coupling fatigue torque.

Dynamic torque load

$T_{KW} \geqslant T_{W} \cdot FT \cdot FF$

Frequency of the dynamic torque load
$f_{err} \leqslant 10$ Hz frequency factor FF = 1.0

Frequency of the dynamic torque load
$f_{err} > 10$ Hz frequency factor FF = $\sqrt{(f_{err}/10\ Hz)}$

Checking the maximum speed

For all load situations $n_{Kmax} \geqslant n_{max}$

12

Checking permitted shaft misalignment and restorative forces

For all load situations, the actual shaft misalignment must be less than the permitted shaft misalignment.

Checking bore diameter, mounting geometry and coupling design

The check must be made on the basis of the dimension tables. On request, couplings with adapted geometry can be provided.

Checking shaft-hub connection

For any information on this, please refer to **page E/22**.

Checking low temperature and chemically aggressive environment

The permitted coupling temperature is specified in the Temperature Factor FT table. In the case of chemically aggressive environments, please consult the manufacturer.

Technical specifications

Power ratings of the ELPEX series

Size	Rated torque T_{KN} Nm	Maximum torque T_{Kmax} Nm	Overload torque T_{KOL} Nm	Fatigue torque T_{KW} Nm	Dynamic torsional stiffness for 100 % load C_{Tdyn} kNm/rad	Stiffness Axial C_a N/mm	Stiffness Radial C_r mm	Permitted shaft misalignment at speed n = 1500 rpm Axial ΔK_a mm	Radial ΔK_r mm	Angle ΔK_w °
270	1600	4800	6400	640	22	660	770	2.2	2.2	0.2
320	2800	8400	11200	1120	38	780	910	2.6	2.6	0.2
375	4500	13500	18000	1800	63	970	1130	3	3	0.2
430	7100	21300	28400	2840	97	1160	1350	3.4	3.4	0.2
500	11200	33600	44800	4480	155	1410	1630	3.8	3.8	0.2
590	18000	54000	72000	7200	240	1710	1990	4.2	4.2	0.2
690	28000	84000	112000	11200	365	2060	2390	4.6	4.6	0.2
840	45000	135000	180000	18000	685	2570	2990	5	5	0.2
970	90000	270000	360000	36000	1100	3020	3510	5.5	5.5	0.2

Torsional stiffness and damping

The dynamic torsional stiffness is load-dependent and increases in proportion to capacity utilization. The values specified in the selection table apply to a capacity utilization of 100 %. The following table shows the correction factors for different rated loads.

$$C_{Tdyn} = C_{Tdyn\ 100\ \%} \cdot FKC$$

	Load T_N / T_{KN} 20%	50%	60%	70%	80%	100%	200%
Correction factor FKC	0.3	0.56	0.65	0.74	0.82	1	1.9

The damping coefficient is Ψ = 1.1

Torsional stiffness also depends on the ambient temperature and the frequency and amplitude of the torsional vibration excitation. More precise torsional stiffness and damping parameters on request.

With flexible couplings the manufacturing process of the rubber elements and their aging primarily influence the stiffness value C_{Tdyn}. For this reason calculation must be made with a tolerance for the dynamic stiffness of ± 20 %. The specified damping coefficient Ψ is a minimum value with the result that the damping performance of the coupling corresponds at least to the specified value.

Permitted shaft misalignment

The permitted shaft misalignment depends on the operating speed. As the speed increases, lower shaft misalignment values are permitted. The correction factors for different speeds are specified in the following table. The maximum speed for the respective coupling size must be noted!

$$\Delta K_{perm} = \Delta K_{1500} \cdot FKV$$

	Speed in rpm 500	1000	1500	3000
Correction factor FKV	1.6	1.25	1.0	0.7

TYPE ENG

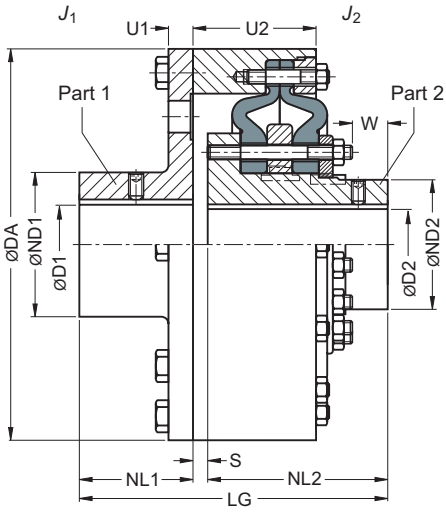

Sizes 270 ... 430

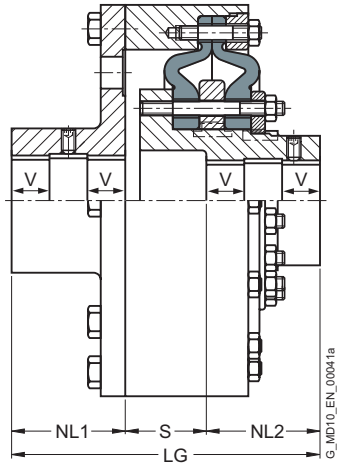

Sizes 500 ... 970

Size	Rated torque	Maximum speed Type		Dimensions in mm														Mass moment of inertia		Article no. [1]		Weight
		Cast iron	Steel	Keyway DIN 6885																Type		
	T_{KN} Nm	n_{Kmax} rpm	n_{Kmax} rpm	D1 min.	D1 max.	D2 min.	D2 max.	DA	ND1	ND2	NL1	NL2	S	U1	U2	W	LG	J_1 kgm²	J_2 kgm²	Cast iron	Steel	m kg
270	1600	3000	4250	45	**80**	45	**70**	270	128	94	80	155	10	14	86	42	245	0.21	0.037	**2LC0200-3AF**	**2LC0200-3AL**	29
320	2800	2500	3600	55	**100**	55	**85**	320	160	115	100	180	6	16	97.5	48	286	0.49	0.082	**2LC0200-4AF**	**2LC0200-4AL**	50
375	4500	2100	3100	65	**115**	65	**105**	375	184	143	120	205	10	18	111.8	62	335	1.0	0.21	**2LC0200-5AF**	**2LC0200-5AL**	80
430	7100	1900	2650	75	**130**	75	**120**	430	208	165	140	235	8	22	126	68	383	2.0	0.37	**2LC0200-6AF**	**2LC0200-6AL**	113
500	11200	1600	2300	90	**150**	90	**150**	500	240	202	160	160	112	25	139.7	80	432	3.9	0.85	**2LC0200-7AF**	**2LC0200-7AL**	174
590	18000	1360	2000	100	**140**	100	**170**	590	224	230	190	190	130	28	162.7	95	510	8.2	1.7	**2LC0200-8AF**	**2LC0200-8AL**	254
				140	**180**				288									8.4				284
690	28000	1200	1650	110	**140**	110	**200**	690	224	278	220	220	140	32	175.6	102	580	16.3	3.7	**2LC0201-0AF**	**2LC0201-0AL**	350
				140	**180**				288									16.8				370
				180	**210**				336									16.9				385
840	45000	1000	1350	140	**180**	140	**240**	840	288	340	280	280	125	42	231	105	685	49	11	**2LC0201-1AF**	**2LC0201-1AL**	700
				180	**220**				352									50				725
970	90000	850	1180	160	**200**	160	**280**	970	320	390	350	350	167	70	290	137	867	104	26	**2LC0201-2AF**	**2LC0201-2AL**	1265
				200	**240**				384									106				1310
				240	**280**				448									110				1350
				280	**320**				512									115				1410

Configurable variants [1]

- ØD1 Without finished bore
  With finished bore
- ØD2 Without finished bore
  With finished bore

[1] To identify complete item numbers specifying the available finish boring options and – if necessary – further order options, please use our configurators on **flender.com**.

↗ For online configuration on **flender.com**, click on the item no.

Notes

- The hub diameter of the component part is assigned according to the diameter of the finished bore. Where bore diameters overlap, the component with the smaller hub diameter is always selected.
- Weights and mass moments of inertia apply to cast iron version with maximum bore.
- From size 500, the bores D1 and D2 are each provided with a recess of D = +1 mm halfway along the hub. V ≈ 1/3 NL.

Ordering example

- ELPEX ENG coupling, size 690, cast iron version
- Bore ØD1 = 180H7 mm with keyway to DIN 6885 and set screw, the hub diameter ND1 = 288 mm is thus assigned
- Bore ØD2 = 200H7 mm with keyway to DIN 6885 and set screw, the hub diameter ND2 = 278 mm is thus assigned

Article no.: 2LC0201-0AF99-0AA0-Z L2B+M2D

TYPE ENGS

with fail-safe device

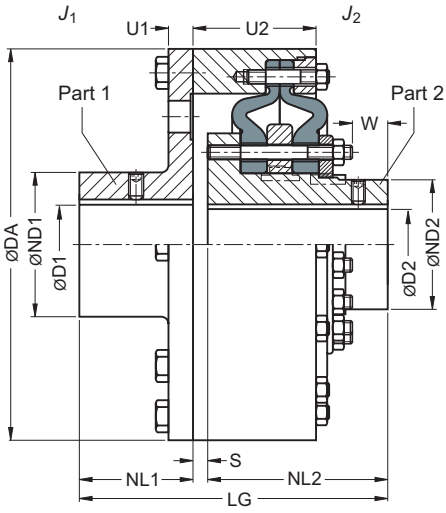

Sizes 270 ... 430

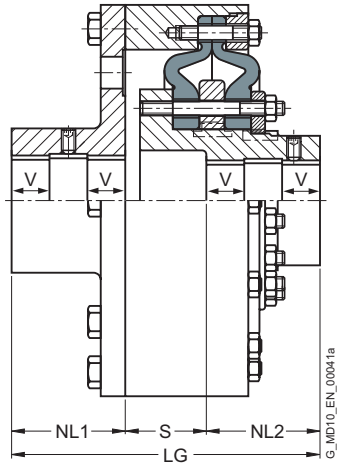

Sizes 500 ... 970

Size	Rated torque	Maximum speed Type		Dimensions in mm														Mass moment of inertia		Article no. [1]		Weight
		Cast iron	Steel	Keyway DIN 6885																Type		
	T_{KN} Nm	n_{Kmax} rpm	n_{Kmax} rpm	D1 min.	D1 max.	D2 min.	D2 max.	DA	ND1	ND2	NL1	NL2	S	U1	U2	W	LG	J_1 kgm²	J_2 kgm²	Cast iron	Steel	m kg
270	1600	3000	4250	45	**80**	45	**70**	270	128	94	80	155	10	14	86	42	245	0.21	0.037	**2LC0200-3AG**	**2LC0200-3AM**	29
320	2800	2500	3600	55	**100**	55	**85**	320	160	115	100	180	6	16	97.5	48	286	0.49	0.082	**2LC0200-4AG**	**2LC0200-4AM**	50
375	4500	2100	3100	65	**115**	65	**105**	375	184	143	120	205	10	18	111.8	62	335	1.0	0.21	**2LC0200-5AG**	**2LC0200-5AM**	80
430	7100	1900	2650	75	**130**	75	**120**	430	208	165	140	235	8	22	126	68	383	2.0	0.37	**2LC0200-6AG**	**2LC0200-6AM**	113
500	11200	1600	2300	90	**150**	90	**150**	500	240	202	160	160	112	25	139.7	80	432	3.9	0.85	**2LC0200-7AG**	**2LC0200-7AM**	174
590	18000	1360	2000	100	**140**	100	**170**	590	224	230	190	190	130	28	162.7	95	510	8.2	1.7	**2LC0200-8AG**	**2LC0200-8AM**	254
				140	**180**				288									8.4				284
690	28000	1200	1650	110	**140**	110	**200**	690	224	278	220	220	140	32	175.6	102	580	16.3	3.7	**2LC0201-0AG**	**2LC0201-0AM**	350
				140	**180**				288									16.8				370
				180	**210**				336									16.9				385
840	45000	1000	1350	140	**180**	140	**240**	840	288	340	280	280	125	42	231	105	685	49	11	**2LC0201-1AG**	**2LC0201-1AM**	700
				180	**220**				352									50				725
970	90000	850	1180	160	**200**	160	**280**	970	320	390	350	350	167	70	290	137	867	104	26	**2LC0201-2AG**	**2LC0201-2AM**	1265
				200	**240**				384									106				1310
				240	**280**				448									110				1350
				280	**320**				512									115				1410

Configurable variants [1]

- ØD1 Without finished bore
  With finished bore
- ØD2 Without finished bore
  With finished bore

[1] To identify complete item numbers specifying the available finish boring options and – if necessary – further order options, please use our configurators on **flender.com**.

↗ For online configuration on **flender.com**, click on the item no.

Notes

- The hub diameter of the component part is assigned according to the diameter of the finished bore. Where bore diameters overlap, the component with the smaller hub diameter is always selected.
- Weights and mass moments of inertia apply to cast iron version with maximum bore.
- From size 500, the bores D1 and D2 are each provided with a recess of D = +1 mm halfway along the hub. V ≈ 1/3 NL.

Ordering example

- ELPEX ENGS coupling, size 690, cast iron version
- Bore ØD1 = 180H7 mm with keyway to DIN 6885 and set screw, the hub diameter ND1 = 288 mm is thus assigned
- Bore ØD2 = 200H7 mm with keyway to DIN 6885 and set screw, the hub diameter ND2 = 278 mm is thus assigned

Article no.: **2LC0201-0AG99-0AA0-Z L2B+M2D**

TYPES EFG

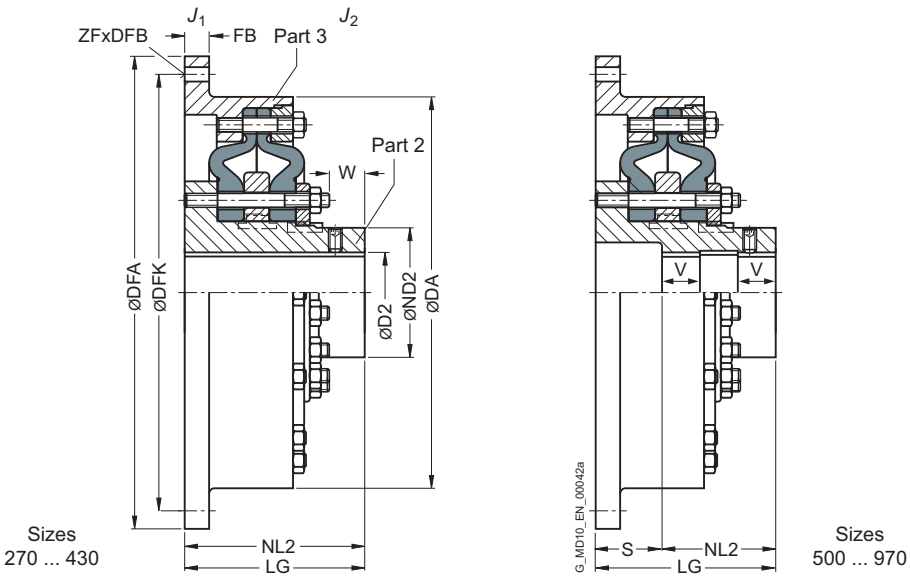

Size	Rated torque	Maximum speed Type Cast iron	Maximum speed Type Steel	Dimensions in mm													Mass moment of inertia		Article no. [1] Type		Weight
											Flange connection dimensions [2]										
	T_{KN}	n_{Kmax}	n_{Kmax}	D2 Keyway DIN 6885		DA	ND2	NL2	S	W	LG	DFA	DFK	FB	ZF	DFB	J_1	J_2	Cast iron	Steel	m
	Nm	rpm	rpm	min.	max.												kgm²	kgm²			kg
270	**1600**	3000	4250	45	**70**	270	94	155	-	42	155	466.7_{g7} [2]	438.2 [2]	12	8	13	0.47	0.037	**2LC0200-3AB2**	**2LC0200-3AJ2**	27
												325_{j6}	300		8	14	0.16		**2LC0200-3AB1**	**2LC0200-3AJ1**	19
320	**2800**	2500	3600	55	**85**	320	115	180	-	48	180	517.5_{g7} [2]	489 [2]	14	8	13	0.87	0.082	**2LC0200-4AB2**	**2LC0200-4AJ2**	42
												392_{j6}	360		8	18	0.39		**2LC0200-4AB1**	**2LC0200-4AJ1**	33.5
375	**4500**	2100	3100	65	**105**	375	143	205	-	62	205	571.5_{g7} [2]	542.9 [2]	16	6	17	1.5	0.21	**2LC0200-5AB2**	**2LC0200-5AJ2**	65
												448_{j6}	415		8	18	0.78		**2LC0200-5AB1**	**2LC0200-5AJ1**	53
430	**7100**	1900	2650	75	**120**	430	165	235	-	68	235	673.1_{g7} [2]	641.4 [2]	20	12	17	3.4	0.37	**2LC0200-6AB2**	**2LC0200-6AJ2**	100
												515_{j6}	475		8	22	1.5		**2LC0200-6AB1**	**2LC0200-6AJ1**	78
500	**11200**	1600	2300	90	**150**	500	202	160	100	80	260	673.1_{g7} [2]	641.4 [2]	20	12	17	4.0	0.85	**2LC0200-7AB2**	**2LC0200-7AJ2**	150
												585_{j6}	545		10	22	2.7		**2LC0200-7AB1**	**2LC0200-7AJ1**	140

Configurable variants [1]

- ØD2 Without finished bore
  With finished bore

[1] To identify complete item numbers specifying the available finish boring options and – if necessary – further order options, please use our configurators on **flender.com**.

[2] The upper line for the flange connection dimensions complies with standard SAE J620d or DIN 6288.

↗ For online configuration on **flender.com**, click on the item no.

Size	Rated torque	Maximum speed Type		Dimensions in mm													Mass moment of inertia		Article no. [1]		Weight
		Cast iron	Steel									Flange connection dimensions [2]							Type		
	T_{KN}	n_{Kmax}	n_{Kmax}	D2 Keyway DIN 6885		DA	ND2	NL2	S	W	LG	DFA	DFK	FB	ZF	DFB	J_1	J_2	Cast iron	Steel	m
	Nm	rpm	rpm	min.	max.												kgm²	kgm²			kg
590	**18000**	1350	2000	100	**170**	590	230	190	120	95	310	733.4_{g7} [2]	692.2 [2]	24	12	21	7.0	1.7	**2LC0200-8AB2**	**2LC0200-8AJ2**	200
												692_{j6}	645		10	26	6.0		**2LC0200-8AB1**	**2LC0200-8AJ1**	190
690	**28000**	1200	1650	110	**200**	690	278	220	130	102	350	890_{g7} [2]	850 [2]	24	32	17	15	3.7	**2LC0201-0AB2**	**2LC0201-0AJ2**	270
												800_{j6}	750		12	26	11		**2LC0201-0AB1**	**2LC0201-0AJ1**	250
840	**45000**	1000	1350	140	**240**	840	340	280	115	105	395	1105_{g7} [2]	1060 [2]	30	32	21	46	11	**2LC0201-1AB2**	**2LC0201-1AJ2**	530
												960_{j6}	908		16	30	32		**2LC0201-1AB1**	**2LC0201-1AJ1**	470
970	**90000**	850	1180	160	**280**	970	390	350	155	137	505	1385_{g7} [2]	1320 [2]	35	24	31	130	26	**2LC0201-2AB2**	**2LC0201-2AJ2**	1050
												1112_{j6}	1051		16	35	76		**2LC0201-2AB1**	**2LC0201-2AJ1**	920

Configurable variants [1]

- ØD2 Without finished bore
  With finished bore

Notes

- The hub diameter of the component part is assigned according to the diameter of the finished bore. Where bore diameters overlap, the component with the smaller hub diameter is always selected.
- Weights and mass moments of inertia apply to cast iron version with maximum bore.
- From size 500, the bores D1 and D2 are each provided with a recess of D = +1 mm halfway along the hub. V ≈ 1/3 NL.
- Notice: The application factor FB in the coupling selection **page 12/5** section must be noted.

Ordering example

- ELPEX EFG coupling, size 430, steel version
- Bore ØD1 = 100H7 mm with keyway to DIN 6885 and set screw, flange to SAE J620d size 21 with DFA = 673.5g7 mm
- Coupling balanced G6.3 in accordance with the half parallel key standard.

Article no.: 2LC0200-6AJ29-0AA0-ZM1N+W02

[1] To identify complete item numbers specifying the available finish boring options and – if necessary – further order options, please use our configurators on **flender.com**.

[2] The upper line for the flange connection dimensions complies with standard SAE J620d or DIN 6288.

↗ For online configuration on **flender.com**, click on the item no.

TYPES EFGS

with fail-safe device

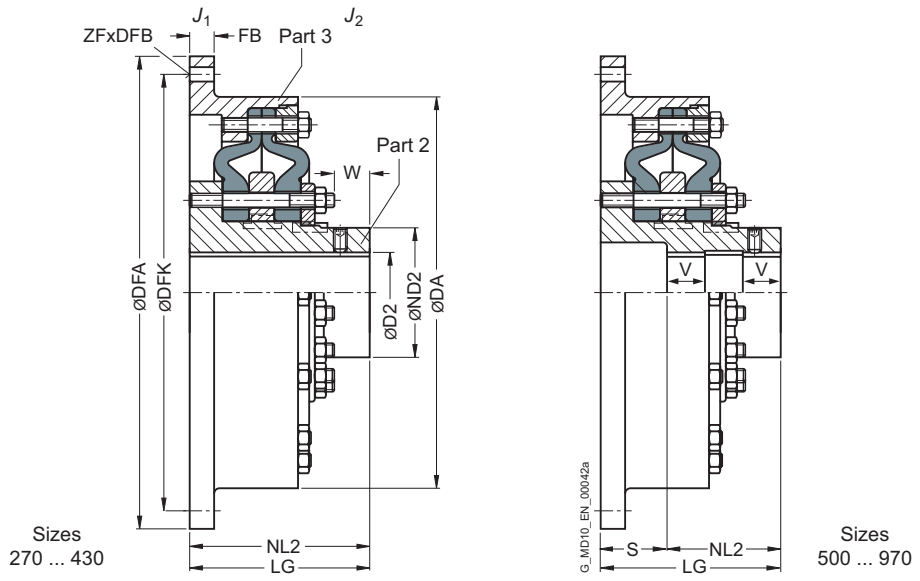

Size	Rated torque	Maximum speed Type Cast iron	Maximum speed Type Steel	Dimensions in mm													Mass moment of inertia		Article no. [1] Type		Weight
											Flange connection dimensions [2]										
	T_{KN}	n_{Kmax}	n_{Kmax}	D2 Keyway DIN 6885		DA	ND2	NL2	S	W	LG	DFA	DFK	FB	ZF	DFB	J_1	J_2	Cast iron	Steel	m
	Nm	rpm	rpm	min.	max.												kgm²	kgm²			kg
270	**1600**	3000	4250	45	**70**	270	94	155	-	42	155	466.7_{g7} [2]	438.2 [2]	12	8	13	0.47	0.037	**2LC0200-3AC2**	**2LC0200-3AK2**	27
												325_{j6}	300		8	14	0.16		**2LC0200-3AC1**	**2LC0200-3AK1**	19
320	**2800**	2500	3600	55	**85**	320	115	180	-	48	180	517.5_{g7} [2]	489 [2]	14	8	13	0.87	0.082	**2LC0200-4AC2**	**2LC0200-4AK2**	42
												392_{j6}	360		8	18	0.39		**2LC0200-4AC1**	**2LC0200-4AK1**	33.5
375	**4500**	2100	3100	65	**105**	375	143	205	-	62	205	571.5_{g7} [2]	542.9 [2]	16	6	17	1.5	0.21	**2LC0200-5AC2**	**2LC0200-5AK2**	65
												448_{j6}	415		8	18	0.78		**2LC0200-5AC1**	**2LC0200-5AK1**	53
430	**7100**	1900	2650	75	**120**	430	165	235	-	68	235	673.1_{g7} [2]	641.4 [2]	20	12	17	3.4	0.37	**2LC0200-6AC2**	**2LC0200-6AK2**	100
												515_{j6}	475		8	22	1.5		**2LC0200-6AC1**	**2LC0200-6AK1**	78
500	**11200**	1600	2300	90	**150**	500	202	160	100	80	260	673.1_{g7} [2]	641.4 [2]	20	12	17	4.0	0.85	**2LC0200-7AC2**	**2LC0200-7AK2**	150
												585_{j6}	545		10	22	2.7		**2LC0200-7AC1**	**2LC0200-7AK1**	140

Configurable variants [1]

- ØD2 Without finished bore
  With finished bore

[1] To identify complete item numbers specifying the available finish boring options and – if necessary – further order options, please use our configurators on **flender.com**.

[2] The upper line for the flange connection dimensions complies with standard SAE J620d or DIN 6288.

↗ For online configuration on **flender.com**, click on the item no.

Size	Rated torque	Maximum speed Type		Dimensions in mm													Mass moment of inertia		Article no. [1]		Weight
		Cast iron	Steel								Flange connection dimensions [2]								Type		
	T_{KN}	n_{Kmax}	n_{Kmax}	D2 Keyway DIN 6885		DA	ND2	NL2	S	W	LG	DFA	DFK	FB	ZF	DFB	J_1	J_2	Cast iron	Steel	m
	Nm	rpm	rpm	min.	max.												kgm²	kgm²			kg
590	**18000**	1350	2000	100	**170**	590	230	190	120	95	310	733.4_{g7} [2]	692.2 [2]	24	12	21	7.0	1.7	**2LC0200-8AC2**	**2LC0200-8AK2**	200
												692_{j6}	645		10	26	6.0		**2LC0200-8AC1**	**2LC0200-8AK1**	190
690	**28000**	1200	1650	110	**200**	690	278	220	130	102	350	890_{g7} [2]	850 [2]	24	32	17	15	3.7	**2LC0201-0AC2**	**2LC0201-0AK2**	270
												800_{j6}	750		12	26	11		**2LC0201-0AC1**	**2LC0201-0AK1**	250
840	**45000**	1000	1350	140	**240**	840	340	280	115	105	395	1105_{g7} [2]	1060 [2]	30	32	21	46	11	**2LC0201-1AC2**	**2LC0201-1AK2**	530
												960_{j6}	908		16	30	32		**2LC0201-1AC1**	**2LC0201-1AK1**	470
970	**90000**	850	1180	160	**280**	970	390	350	155	137	505	1385_{g7} [2]	1320 [2]	35	24	31	130	26	**2LC0201-2AC2**	**2LC0201-2AK2**	1050
												1112_{j6}	1051		16	35	76		**2LC0201-2AC1**	**2LC0201-2AK1**	920

Configurable variants [1]

- ØD2 Without finished bore
  With finished bore

Notes

- The hub diameter of the component part is assigned according to the diameter of the finished bore. Where bore diameters overlap, the component with the smaller hub diameter is always selected.
- Weights and mass moments of inertia apply to cast iron version with maximum bore.
- From size 500, the bores D1 and D2 are each provided with a recess of D = +1 mm halfway along the hub. V ≈ 1/3 NL.
- Notice: The application factor FB in the coupling selection **page 12/5** section must be noted.

Ordering example

- ELPEX EFGS coupling, size 430, steel version
- Bore ØD1 = 100H7 mm with keyway to DIN 6885 and set screw, flange to SAE J620d size 21 with DFA = 673.5g7 mm
- Coupling balanced G6.3 in accordance with the half parallel key standard.

Article no.: 2LC0200-6AK29-0AA0-Z M1N+W02

[1] To identify complete item numbers specifying the available finish boring options and – if necessary – further order options, please use our configurators on **flender.com**.

[2] The upper line for the flange connection dimensions complies with standard SAE J620d or DIN 6288.

↗ For online configuration on **flender.com**, click on the item no.

SPARE AND WEAR PARTS

Flexible rings

Size	↗ Article no. set of flexible rings for a coupling	Weight kg
270	2LC0200-3XV00-0AA0	1.6
320	2LC0200-4XV00-0AA0	2.6
375	2LC0200-5XV00-0AA0	4.4
430	2LC0200-6XV00-0AA0	6.8
500	2LC0200-7XV00-0AA0	9.4
590	2LC0200-8XV00-0AA0	18
690	2LC0201-0XV00-0AA0	36
840	2LC0201-1XV00-0AA0	68
970	2LC0201-2XV00-0AA0	120

Note

- The flexible rings are wear parts. The service life depends on the operating conditions.

Flexible ring screw connection

Size	↗ Article no. set of pins and bolts Type EFG, ENG	EFGS, ENGS
270	2LC0200-3XU00-0AA0	2LC0200-3XW00-0AA0
320	2LC0200-4XU00-0AA0	2LC0200-4XW00-0AA0
375	2LC0200-5XU00-0AA0	2LC0200-5XW00-0AA0
430	2LC0200-6XU00-0AA0	2LC0200-6XW00-0AA0
500	2LC0200-7XU00-0AA0	2LC0200-7XW00-0AA0
590	2LC0200-8XU00-0AA0	2LC0200-8XW00-0AA0
690	2LC0201-0XU00-0AA0	2LC0201-0XW00-0AA0
840	2LC0201-1XU00-0AA0	2LC0201-1XW00-0AA0
970	2LC0201-2XU00-0AA0	2LC0201-2XW00-0AA0

APPENDIX

Fits	**A/2**
Fitting recommendations	A/2
Deviation table to DIN ISO 286	A/2
Cylindrical shaft ends	A/3
Central holes according to DIN 332 Part 2	A/3
Parallel key connections to DIN 6885-1	**A/4**
Related catalogs	**A/6**
Suitable gear solutions	**A/8**
The perfect coupling	**A/10**
Individual solutions	**A/12**
Flender Services	**A/16**

A

FITS

Fitting recommendations

For many applications, the fit assignment m6/H7 is especially suitable.

Description	Application	Shaft tolerance	Bore tolerance
Facile sliding fit	For steel or aluminum hubs	g6	H7
		h7	H7
		k6	F7
		m6	F7
Sliding fit with parallel key connection not suitable for reversing operation	For steel and cast hubs	j6	H7
		h6	J7
Press fit with parallel key connection not suitable for reversing operation	For steel and cast hubs	h6	K7
		k6	H7
Interference fit with parallel key connection suitable for reversing operation	For steel and cast hubs	m6	H7
		n6	H7
		h6	M7
	Only for steel hubs	h6	P7
	Preferred for N-ZAPEX and ARPEX coupling series	k6	M7
		m6	K7
		n6	J7
		p6	H7
		s6	F7
Shrink fit connection without parallel key	Only for steel hubs	u6	H6
	The permitted hub tension must be urgently checked.	v6	H6
		x6	H6

Deviation table to DIN ISO 286 for above-mentioned fits for bore diameters from 10 mm to 250 mm

Bore diameter		Deviations in µm											
		Bore						Shaft					
above	up to	F7	H7	J7	K7	M7	P7	h6	j6	k6	m6	n6	p6
10	18	+34	+18	+10	+6	0	-11	0	+8	+12	+18	+23	+29
		+16	0	-8	-12	-18	-29	-11	-3	+1	+7	+12	+18
18	30	+41	+21	+12	+6	0	-14	0	+9	+15	+21	+28	+35
		+20	0	-9	-15	-21	-35	-13	-4	+2	+8	+15	+22
30	50	+50	+25	+14	+7	0	-17	0	+11	+18	+25	+33	+42
		+25	0	-11	-18	-25	-42	-16	-5	+2	+9	+17	+26
50	80	+60	+30	+18	+9	0	-21	0	+12	+21	+30	+39	+51
		+30	0	-12	-21	-30	-51	-19	-7	+2	+11	+20	+32
80	120	+71	+35	+22	+10	0	-24	0	+13	+25	+35	+45	+59
		+36	0	-13	-25	-35	-59	-22	-9	+3	+13	+23	+37
120	180	+83	+40	+26	+12	0	-28	0	+14	+28	+40	+52	+68
		+43	0	-14	-28	-40	-68	-25	-11	+3	+15	+27	+43
180	250	+96	+46	+30	+13	0	-33	0	+16	+33	+46	+60	+79
		+50	0	-16	-33	-46	-79	-29	-13	+4	+17	+31	+50

Cylindrical shaft ends, extract from DIN 748 Part 1 (long)

	Diameter in mm																					
	24	25	28	30	32	35	38	40	42	45	48	50	55	60	65	70	75	80	85	90	95	100
ISO tolerance zone	**k6**												**m6**									
End length in mm	50	60		80				110						140				170				210

Central holes according to DIN 332 Part 2

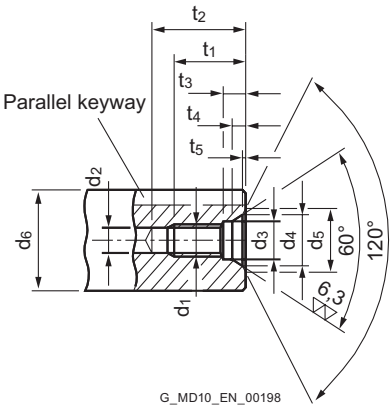

Form DS (with thread) DIN 332/2

Recommended diameter ranges d_6 [1]		DS form dimensions									
above	up to	d_1	d_2 [2]	d_3	d_4	d_5	t_1 +2	t_2 min.	t_3 +1	t_4 approx.	t_5 approx.
7	**10**	M3	2.5	3.2	5.3	5.8	9	12	2.6	1.8	0.2
10	**13**	M4	3.3	4.3	6.7	7.4	10	14	3.2	2.1	0.3
13	**16**	M5	4.2	5.3	8.1	8.8	12.5	17	4	2.4	0.3
16	**21**	M6	5	6.4	9.6	10.5	16	21	5	2.8	0.4
21	**24**	M8	6.8	8.4	12.2	13.2	19	25	6	3.3	0.4
24	**30**	M10	8.5	10.5	14.9	16.3	22	30	7.5	3.8	0.6
30	**38**	M12	10.2	13	18.1	19.8	28	37	9.5	4.4	0.7
38	**50**	M16	14	17	23	25.3	36	45	12	5.2	1.0
50	**85**	M20	17.5	21	28.4	31.3	42	53	15	6.4	1.3
85	**130**	M24	21	25	34.2	38	50	63	18	8	1.6
130	**225**	M30 [3]	26.5	31	40.2	44.6	60	77	22	8	1.9
225	**320**	M36 [3]	32	37	49.7	55	74	93	22	11	2.3
320	**500**	M42 [3]	37.5	43	60.3	66.6	84	105	26	15	2.7

[1] Diameter refers to the finished workpiece

[2] Tap hole drill diameter according to DIN 336 Part 1

[3] Dimensions not acc. to DIN 332 Part 2

PARALLEL KEY CONNECTIONS TO DIN 6885-1

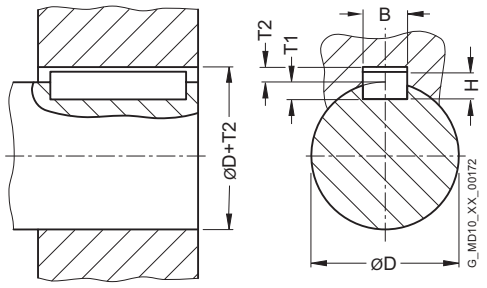

For moderate operating conditions, the hub keyway tolerance JS9 is recommended.

In harsh operating conditions or during reversing operation, the keyway width tolerance P9 must be preferred.

With two parallel keyways, the keyway width tolerance JS9 should be specified in order to simplify the assembly.

The shaft keyway width has to be specified with the tolerance N9.

Diameter		Keyway width	Parallel key height	Shaft keyway depth	Hub keyway depth	Deviation for shaft and hub keyway depth	Deviation table for keyway width B	
above D mm	up to mm	B mm	H mm	T1 mm	T2 mm	mm	JS9 µm	P9 µm
	10	3	3	1.8	1.4	+0.1	+12.5	-6
							-12.5	-31
10	12	4	4	2.5	1.8	+0.1	+15	-12
							-15	-42
12	17	5	5	3	2.3	+0.1	+15	-12
							-15	-42
17	22	6	6	3.5	2.8	+0.1	+15	-12
							-15	-42
22	30	8	7	4	3.3	+0.2	+18	-15
							-18	-51
30	38	10	8	5	3.3	+0.2	+18	-15
							-18	-51
38	44	12	8	5	3.3	+0.2	+21.5	-18
							-21.5	-61
44	50	14	9	5.5	3.8	+0.2	+21.5	-18
							-21.5	-61
50	58	16	10	6	4.3	+0.2	+21.5	-18
							-21.5	-61
58	65	18	11	7	4.4	+0.2	+21.5	-18
							-21.5	-61
65	75	20	12	7.5	4.9	+0.2	+26	-22
							-26	-74
75	85	22	14	9	5.4	+0.2	+26	-22
							-26	-74
85	95	25	14	9	5.4	+0.2	+26	-22
							-26	-74

Diameter		Keyway width	Parallel key height	Shaft keyway depth	Hub keyway depth	Deviation for shaft and hub keyway depth	Deviation table for keyway width B	
above D mm	up to mm	B mm	H mm	T1 mm	T2 mm	mm	JS9 µm	P9 µm
95	110	28	16	10	6.4	+0.2	+26	-22
							-26	-74
110	130	32	18	11	7.4	+0.2	+31	-26
							-31	-88
130	150	36	20	12	8.4	+0.3	+31	-26
							-31	-88
150	170	40	22	13	9.4	+0.3	+31	-26
							-31	-88
170	200	45	25	15	10.4	+0.3	+31	-26
							-31	-88
200	230	50	28	17	11.4	+0.3	+31	-26
							-31	-88
230	260	56	32	20	12.4	+0.3	+37	-32
							-37	-106
260	290	63	32	20	12.4	+0.3	+37	-32
							-37	-106
290	330	70	36	22	14.4	+0.3	+37	-32
							-37	-106
330	380	80	40	25	15.4	+0.3	+37	-32
							-37	-106
380	440	90	45	28	17.4	+0.3	+43.5	-37
							-43.5	-124
440	500	100	50	31	19.4	+0.3	+43.5	-37
							-43.5	-124

A

RELATED CATALOGS

Torsionally Rigid Couplings

FLE 10.1

FLEX-C10001-00-7600

Flexible Couplings

FLE 10.2

FLEX-C10002-00-7600

Highly Flexible Couplings

FLE 10.3

FLEX-C10003-00-7600

Fluid Couplings

FLE 10.4

FLEX-C10004-00-7600

ARPEX

High Performance Couplings

FLE 10.5

FLEX-C10120-00-7600

ARPEX

Safety couplings

FLE 10.7

FLEX-C10122-00-7600

A

FLENDER SIP
Standard Industrial Planetary Gear Units
MD 31.1
PDMD-C10154-00

FLENDER CHG
Helical Gear Units
MD 20.10
PDMD-C10155-00

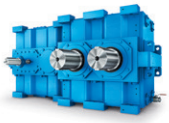

Gear units
Fast Track
MD 20.12
PDMD-C10156-00

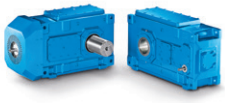

Bucket Elevator Drives
MD 20.2
PDMD-C10157-00

PLANUREX 3
Planetary Gear Units
FLE 20.3
FLEX-C10052-00-7600

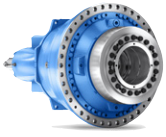

Paper Machine Drives
MD 20.5
PDMD-C10159-00

Conveyor Belt Drives
MD 20.6
PDMD-C10160-00

Marine Reduction Gearboxes
MD 20.7
PDMD-C10161-00

DUORED 2
Helical Gear Units, Load-sharing
MD 20.8
PDMD-C10162-00

Pinion Drive for Tube Mills
MD 20.9
PDMD-C10163-00

A

THE RIGHT GEAR UNIT SOLUTION FOR ANY REQUIREMENT

We provide helical and planetary gear units made up of standard modules or as a complete application solution.

Helical and planetary gear units from Flender are modern drive solutions that satisfy the most varying and extreme demands, day after day and year after year. For decades, plant operators have been achieving high system reliability and low lifecycle costs in every conceivable industry with our helical gear units.

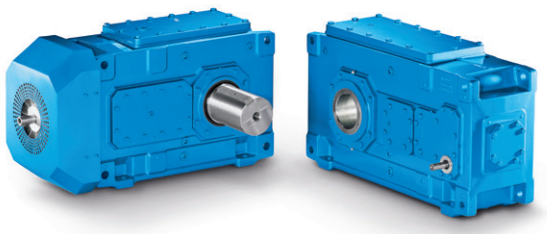

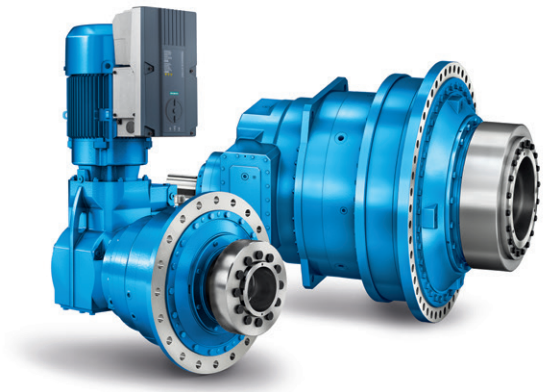

Helical and bevel helical gear units

Flender helical and bevel helical gear units are by far the most comprehensive range of industrial gear units in the world. It ranges from a multi-faceted universal gear unit portfolio and application-specific gear units to customer-specific solutions.

Rated torque: 3,300 Nm ... 1,400,000 Nm

Planetary Gear Units

With Flender planetary gear units, we provide a range of durable, reliable and finely graduated gear unit solutions. The series wins customers over due to its highly integrated planetary geared motor and maximum conformity with all international motor standards. It also brings quality and performance in a good ratio of lifecycle costs to price.

Rated torque: 10,000 Nm ... 5,450,000 Nm

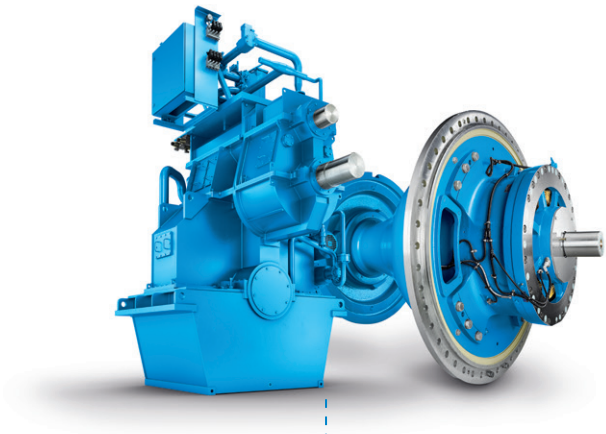

Application-specific gear units

With application-specific gear units, Flender provides by far the most application solutions and thus covers nearly every drive-related need from hundreds of applications in industry and the acquisition of raw materials.

Rated torque: up to 10,000,000 Nm

Customer-specific designs

Our experts are available at any time for special requirements during the development of new products. From designing and simulating complex drive solutions to implementing them, we work together with you to resolve multi-layered tasks.

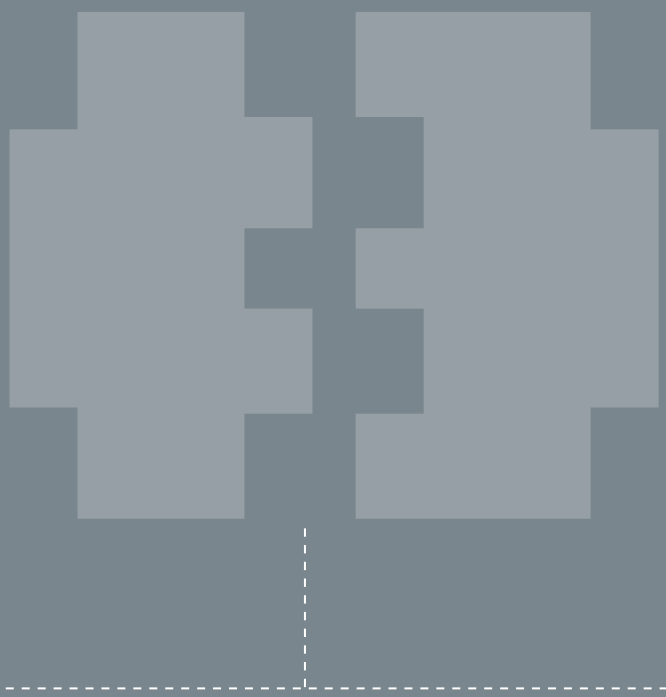

THE PERFECT COUPLING FOR THE PERFECT GEAR UNIT

We provide elastic, highly elastic, rigid and hydrodynamic solutions.

Regardless of which demands are made on the coupling: Low or high performance, demanding operating conditions or high ambient temperatures, dusty or hazardous environments – we have the right portfolio. Our comprehensive range of couplings offers a large number of sizes and designs with a torque range from 0.5 to 10,000,000 Nm.

In over 90 years of development, conception and production, our product portfolio has grown to its current level of diversity. Nearly every matured coupling solution is available as a standard item in our modular system. This saves our customers time and money.

We are a powerful and flexible player in every market in the world – just like our customers. The production of our coupling components aims for maximum quality. As a trio, the setup, material and design result in optimal coupling solutions – rugged, dependable, largely low-maintenance and, above all, available at any time, anywhere. We provide high quality, first class delivery performance, and comprehensive service.

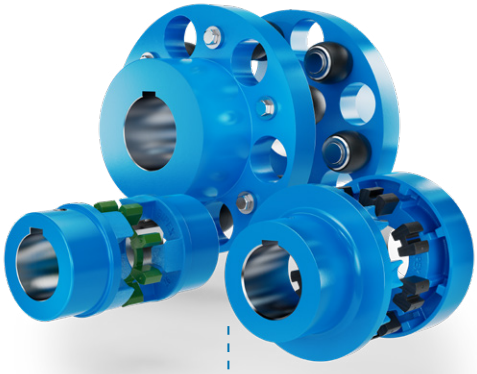

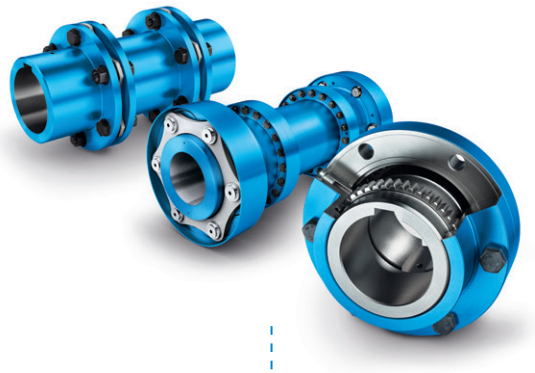

Flexible couplings

Our elastic couplings are pluggable and easy to install. The elastomer element equalizes the shaft offset and absorbs impacts from the motor or driven machine.

Nominal output torque: 12 Nm ... 1,690,000 Nm

Torsionally rigid couplings

Our compact steel couplings provide extremely precise transmission of high torques, especially in harsh operating conditions and extreme temperatures.

Nominal output torque: 92 Nm ... 10,000,000 Nm

Hydrodynamic couplings

Soft start, overload protection, torsional vibration damping – FLUDEX® fluid couplings allow the torque-limited approach and have very little slippage at rated load.

Power: 1.2 kW ... 2,500 kW

Highly-flexible couplings

Highly flexible couplings are well-suited for connecting machines that operate asymmetrically. They are preferred for use in systems that are periodically operated.

Nominal output torque: 24 Nm ... 90,000 Nm

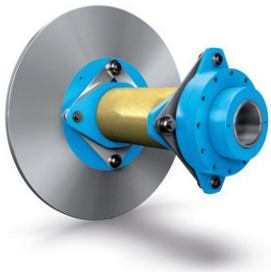

Application-specific couplings

Flender offers a variety of application-specific couplings for rail vehicles and use in wind energy generation.

Backlash-free couplings

Our couplings act as a modular interface between the motor and the work machine to ensure reliable, backlash-free power transmission in servodrives and positioning drives.

Nominal output torque: 0.1 Nm ... 5,000 Nm

Flender's system competence turns first-class components into systems with tangible added value. Drive systems from Flender ensure maximum productivity, energy efficiency and reliability in any automation environment.

Consultation

Our customers use our interdisciplinary know-how, our application competence, our innovation strength and, last but not least, our experience to find the right drive system for their individual requirements.

Reduced engineering time, lower costs

Integrated drive portfolio

We not only provide gear units and couplings, but also have the competence in electrical drive technology that enables us to offer the entire drive train – perfectly integrated, with optimal interaction between all components, as a standard or individual solution.

Fewer interface risks, more efficiency

INDIVIDUAL SOLUTIONS.

We have the right solution for you, even if your requirements are special. We no longer have to newly develop every special solution. Many solutions are already available.

At **flender.com**, we provide application-specific solutions for your special requirements.

Use our online configurator, which allows you to create tailored product combinations.

Flender service

From diagnostics and support, replacement part and repair services, all the way to maintenance and retrofit services – the Flender service portfolio creates individual solutions, fully and completely tailored to the needs of our customers. In this way, a gear unit remains an original Flender gear unit.

Increased system availability, reduced lifecycle costs

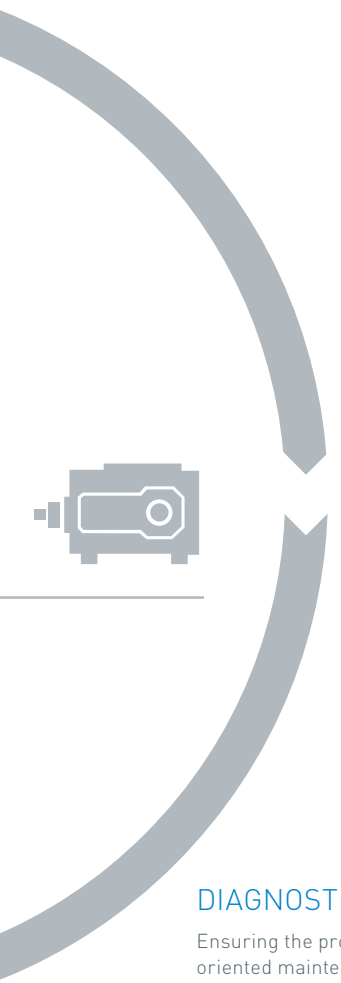

DIAGNOSTEX

Ensuring the process stability requires status-oriented maintenance of the drive train. With DIAGNOSTEX®, sensors measure deviations of our gear units from the target status. These can be analyzed and evaluated in terms of maximized system availability.

Industrie 4.0, reduced costs

GREAT EXPERTISE IN YOUR INDUSTRY TOO.

Each industry has its own conditions. Every application has its own specific requirements. We are looking forward to meeting your challenges.

We probably already have the right solution at hand. Here are a few examples:

Minerals and mining

Requirement:
Perfectly coordinated drive system

Cement

Requirement:
Low maintenance effort and cost, sealing due to dirt in surroundings

Plastics and rubber

Requirement:
Absorption of high axial forces, suitability for explosion protection

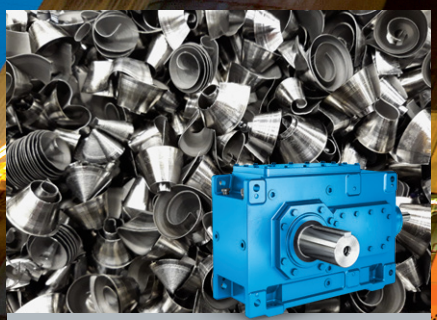

Environmental and recycling

Requirement:
Highest possible reliability, rugged design

Pulp and paper

Requirement:
Suitability for centrally located lubrication

Industrial cranes

Requirement:
Quick availability, version with double drive shaft

Chemicals

Requirement:
Absorption of forces from the manufacturing process

Power generation

Requirement:
Effective cooling, speed adjustment for motor to fan

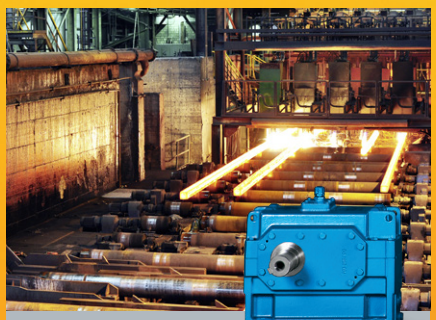

Metals

Requirement:
Harsh working conditions, high peak loads

Harbor cranes

Requirement:
Specific axle clearance, frequent start-up

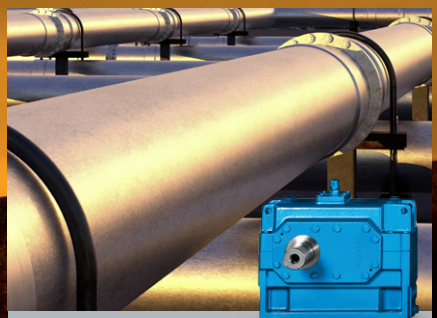

Oil and gas

Requirement:
Flexible adaptation to speed requirements

Water and wastewater

Requirement:
Absorption of external forces, oil-retaining pipe required

AN ORIGINAL FOR THE LONG TERM WITH ORIGINAL FLENDER SERVICES

Ever increasing requirements make it more and more important for industrial plants to work with maximum productivity and efficiency. Flender Services give companies a decisive advantage over the competition in industry, the acquisition of raw materials and energy production. In view of the high cost pressure, increasing energy prices and stricter and stricter environmental stipulations, our services are becoming a decisive factor to success over the competition.

Enjoy the support of our service experts, from planning, development and operation to the modernization of your plant and benefit from our experience and in-depth know-how of your application – in more than 100 countries, seven days a week, 24 hours a day.

Reduce standstills, minimize downtimes due to failure, and increase the productivity, flexibility and cost efficiency of your plant.

OUR OFFER FOR GEAR UNITS AND COUPLINGS AT A GLANCE.

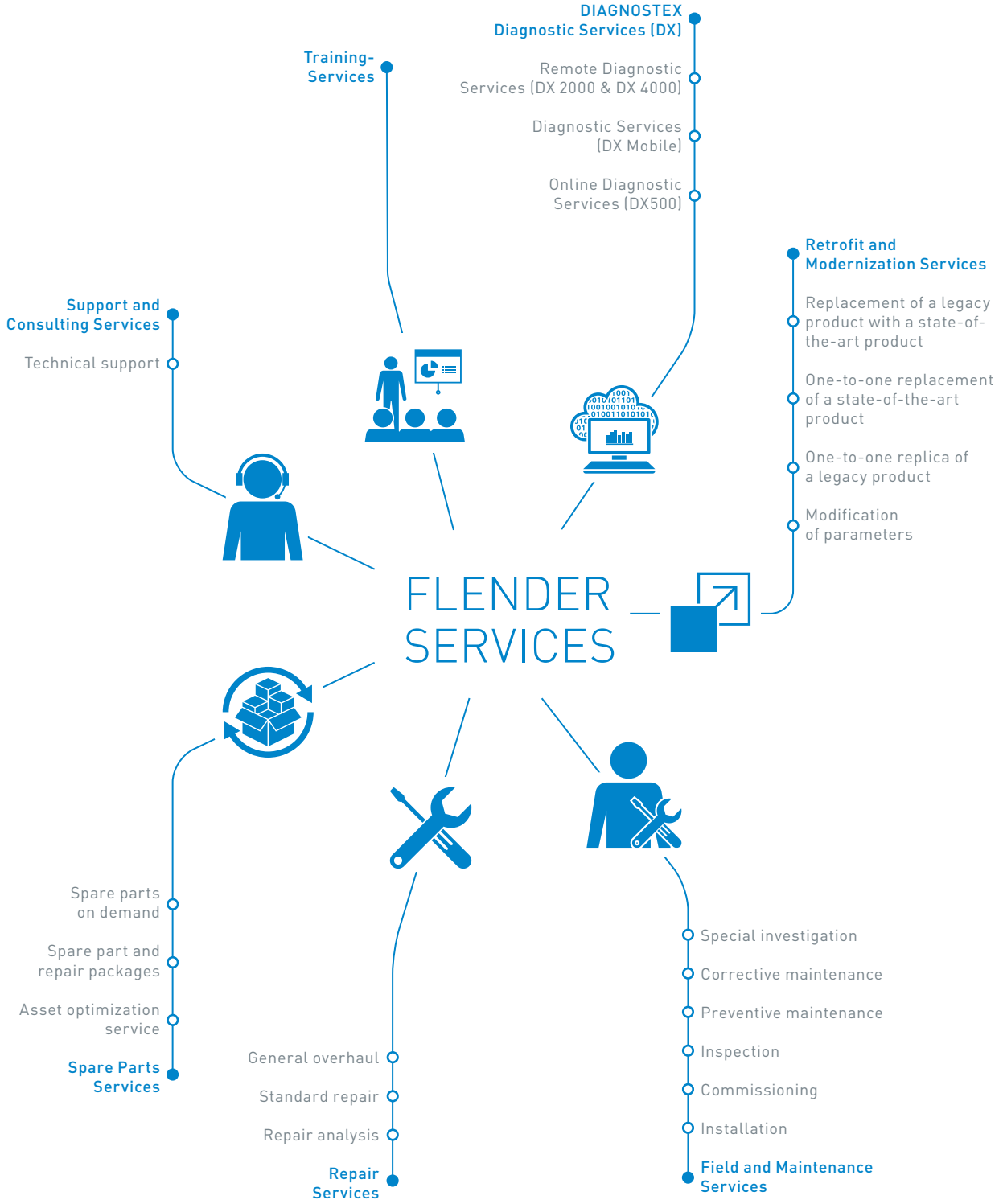

FLENDER

FLENDER COUPLINGS
CATALOG **FLE 10.3**
EDITION 2026.1 EN

WE **MOVE** the WORLD

Flender GmbH
Alfred-Flender-Straße 77
46395 Bocholt
Germany

Article no.: FLEX-C10003-00-7600

Subject to changes and errors.
The information given in this product catalog includes descriptions and performance features that in specific applications do not always apply in the form described or may change through further-development of the products. The desired performance features are binding only if they are expressly agreed on conclusion of contract. Subject to availability for delivery and to technical changes.

flender.com